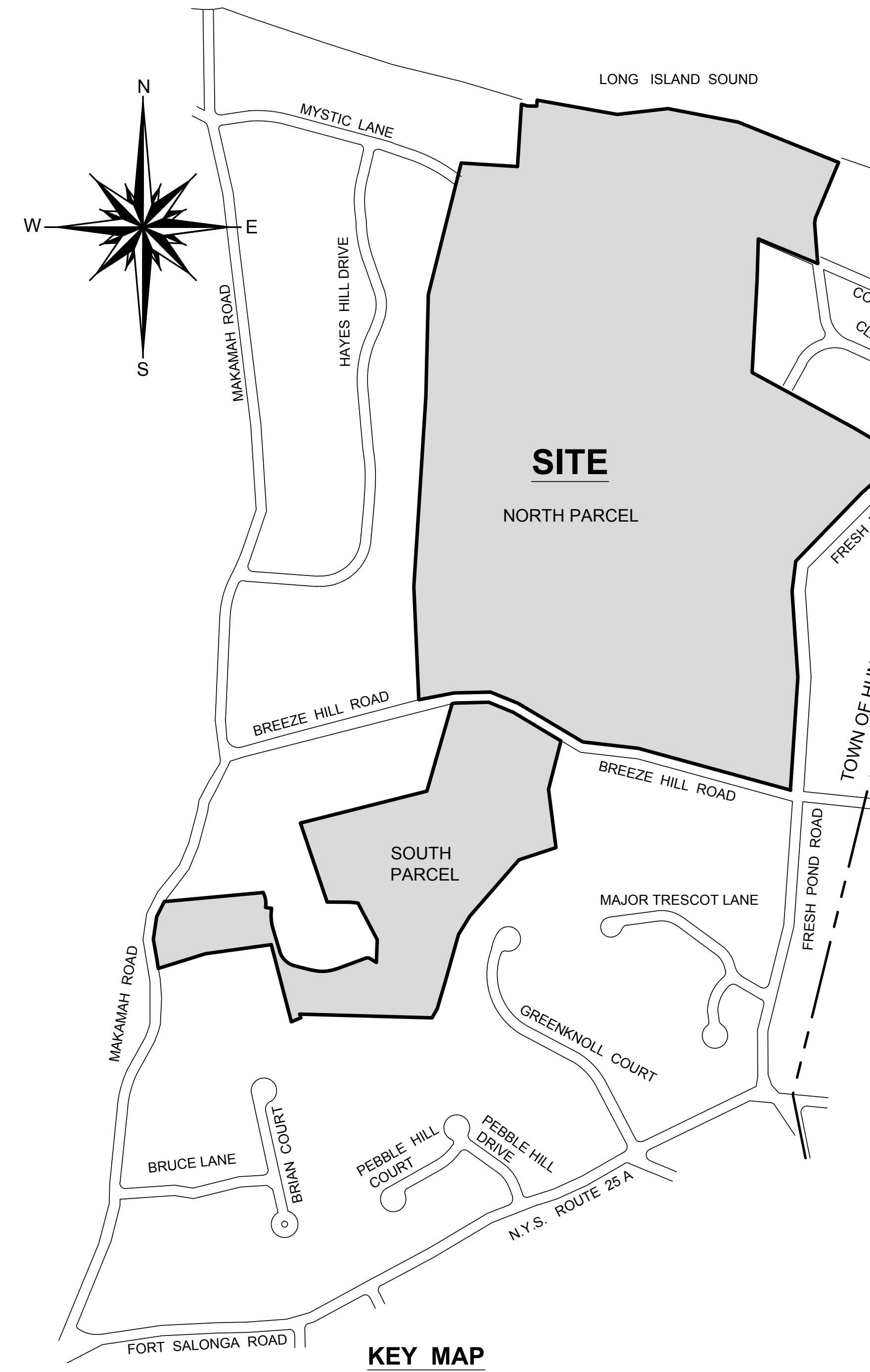
LONG ISLAND SOUND
MYSTIC LANE
N
S
W
E
MAKAMAH ROAD
HAYES HILL DRIVE
COUSINS STREET
CLAYMORE ROAD
SITE
NORTH PARCEL
FRESH POND ROAD
TOWN OF HUNTINGTON
TOWN OF SMITHTOWN
BREEZE HILL ROAD
SOUTH PARCEL
MAJOR TRESCOT LANE
GREENKNOLL COURT
BRUCE LANE
BRIAN COURT
PEBBLE HILL COURT
PEBBLE HILL DRIVE
N.Y.S. ROUTE 25 A
FORT SALONGA ROAD

KEY MAP

1" = 600'

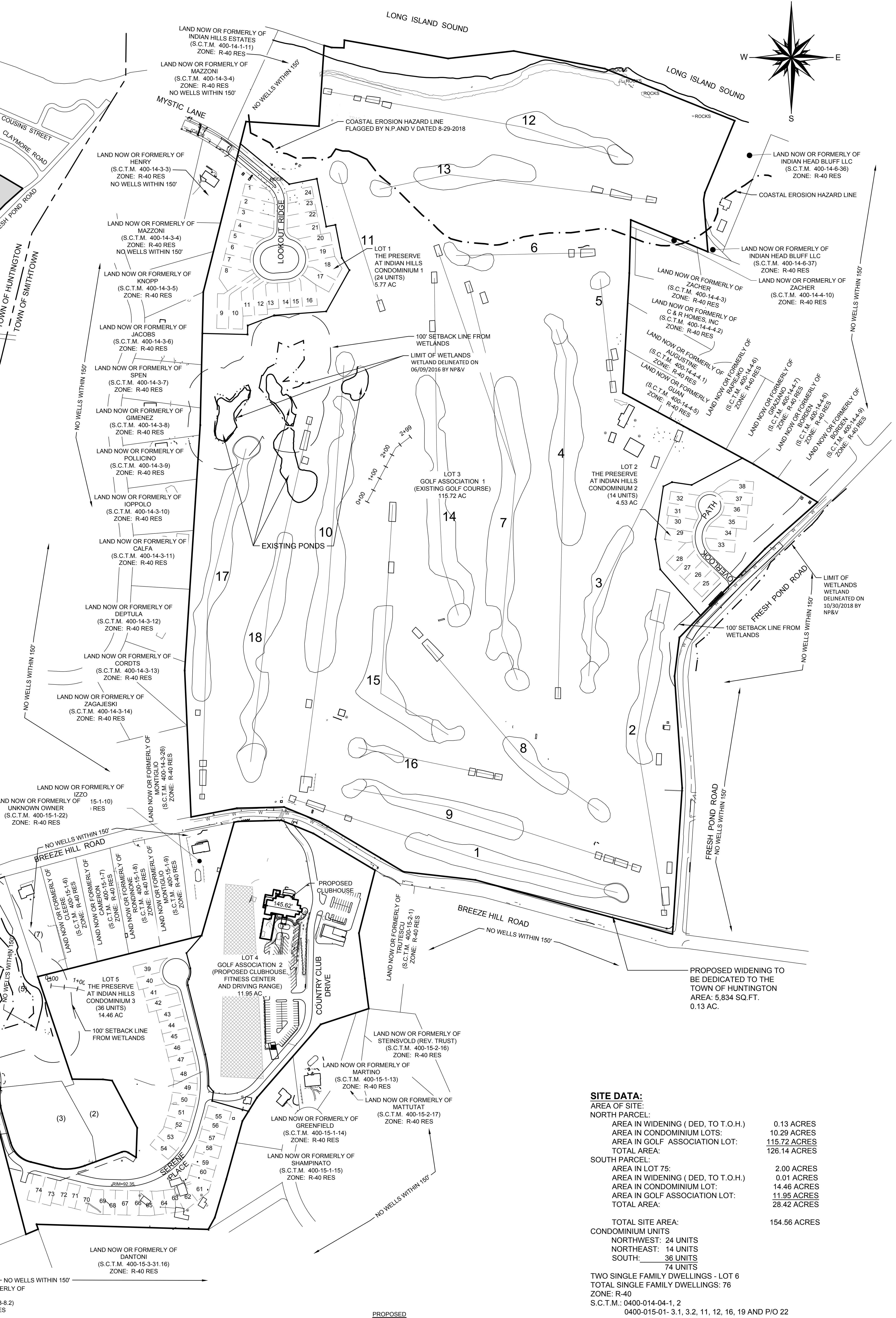
LONG ISLAND SOUND
LONG ISLAND SOUND
N
W
E
S
ROCKS
LAND NOW OR FORMERLY OF
INDIAN HILLS ESTATES
(S.C.T.M. 400-14-1-11)
ZONE: R-40 RES
LAND NOW OR FORMERLY OF
MAZZONI
(S.C.T.M. 400-14-3-4)
ZONE: R-40 RES
NO WELLS WITHIN 150'
MYSTIC LANE
NO WELLS WITHIN 150'
COASTAL EROSION HAZARD LINE
FLAGGED BY N.P.AND V DATED 8-29-2018
LAND NOW OR FORMERLY OF
HENRY
(S.C.T.M. 400-14-3-3)
ZONE: R-40 RES
NO WELLS WITHIN 150'
LOOKOUT RIDGE
ROCK
LAND NOW OR FORMERLY OF
MAZZONI
(S.C.T.M. 400-14-3-4)
ZONE: R-40 RES
NO WELLS WITHIN 150'
11
LOT 1
THE PRESERVE
AT INDIAN HILLS
CONDOMINIUM 1
(24 UNITS)
5.77 AC
LAND NOW OR FORMERLY OF
KNOPP
(S.C.T.M. 400-14-3-5)
ZONE: R-40 RES
LAND NOW OR FORMERLY OF
JACOBS
(S.C.T.M. 400-14-3-6)
ZONE: R-40 RES
100' SETBACK LINE FROM
WETLANDS
LIMIT OF WETLANDS
WETLAND DELINEATED ON
06/09/2016 BY NP&V
LAND NOW OR FORMERLY OF
SPEN
(S.C.T.M. 400-14-3-7)
ZONE: R-40 RES
LAND NOW OR FORMERLY OF
GIMENEZ
(S.C.T.M. 400-14-3-8)
ZONE: R-40 RES
LAND NOW OR FORMERLY OF
POLLICINO
(S.C.T.M. 400-14-3-9)
ZONE: R-40 RES
LAND NOW OR FORMERLY OF
IOPPOLO
(S.C.T.M. 400-14-3-10)
ZONE: R-40 RES
LAND NOW OR FORMERLY OF
CALFA
(S.C.T.M. 400-14-3-11)
ZONE: R-40 RES
LAND NOW OR FORMERLY OF
DEPTULA
(S.C.T.M. 400-14-3-12)
ZONE: R-40 RES
LAND NOW OR FORMERLY OF
CORDTS
(S.C.T.M. 400-14-3-13)
ZONE: R-40 RES
LAND NOW OR FORMERLY OF
ZAGAJESKI
(S.C.T.M. 400-14-3-14)
ZONE: R-40 RES
NO WELLS WITHIN 150'
EXISTING PONDS
0+00
1+00
2+00
2+99
LOT 3
GOLF ASSOCIATION 1
(EXISTING GOLF COURSE)
115.72 AC
1
2
3
4
5
6
7
8
9
10
12
13
14
15
16
17
18
LAND NOW OR FORMERLY OF
INDIAN HEAD BLUFF LLC
(S.C.T.M. 400-14-6-36)
ZONE: R-40 RES
COASTAL EROSION HAZARD LINE
LAND NOW OR FORMERLY OF
INDIAN HEAD BLUFF LLC
(S.C.T.M. 400-14-6-37)
ZONE: R-40 RES
LAND NOW OR FORMERLY OF
ZACHER
(S.C.T.M. 400-14-4-10)
ZONE: R-40 RES
LAND NOW OR FORMERLY OF
ZACHER
(S.C.T.M. 400-14-4-3)
ZONE: R-40 RES
LAND NOW OR FORMERLY OF
C & R HOMES, INC
(S.C.T.M. 400-14-4-4.2)
ZONE: R-40 RES
LAND NOW OR FORMERLY OF
AUGUSTINE
(S.C.T.M. 400-14-4-4.1)
ZONE: R-40 RES
LAND NOW OR FORMERLY
GUAN
(S.C.T.M. 400-14-4-5)
ZONE: R-40 RES
LAND NOW OR FORMERLY OF
RAPIEJKO
(S.C.T.M. 400-14-4-6)
ZONE: R-40 RES
LAND NOW OR FORMERLY OF
GRAZIANO
(S.C.T.M. 400-14-4-7)
ZONE: R-40 RES
LAND NOW OR FORMERLY OF
BORDEN
(S.C.T.M. 400-14-4-8)
ZONE: R-40 RES
LAND NOW OR FORMERLY OF
BORDEN
(S.C.T.M. 400-14-4-9)
ZONE: R-40 RES
NO WELLS WITHIN 150'
LOT 2
THE PRESERVE
AT INDIAN HILLS
CONDOMINIUM 2
(14 UNITS)
4.53 AC
PATH
OVERLOOK
FRESH POND ROAD
LIMIT OF
WETLANDS
WETLAND
DELINEATED ON
10/30/2018 BY
NP&V
100' SETBACK LINE FROM
WETLANDS
NO WELLS WITHIN 150'
FRESH POND ROAD
NO WELLS WITHIN 150'
LAND NOW OR FORMERLY OF
IZZO
(S.C.T.M. 400-15-1-10)
ZONE: R-40 RES
LAND NOW OR FORMERLY OF
UNKNOWN OWNER
(S.C.T.M. 400-15-1-22)
ZONE: R-40 RES
LAND NOW OR FORMERLY OF
MONTIGLIO
(S.C.T.M. 400-14-3-26)
ZONE: R-40 RES
NO WELLS WITHIN 150'
BREEZE HILL ROAD
MAKAMAH ROAD
LAND NOW OR FORMERLY OF
CLEERE
(S.C.T.M. 400-15-1-6)
ZONE: R-40 RES
LAND NOW OR FORMERLY OF
CAMERON
(S.C.T.M. 400-15-1-7)
ZONE: R-40 RES
LAND NOW OR FORMERLY OF
RONDINONE
(S.C.T.M. 400-15-1-8)
ZONE: R-40 RES
LAND NOW OR FORMERLY OF
MONTIGLIO
(S.C.T.M. 400-15-1-9)
ZONE: R-40 RES
(7)
(5)
(4)
(6)
(3)
(2)
(1)
NO WELLS WITHIN 150'
LIMIT OF WETLANDS
WETLAND DELINEATED ON
01/26/2018 BY NP&V
LIMIT OF WETLANDS
WETLAND DELINEATED
ON 10/30/2018 BY NP&V
PROPOSED WIDENING TO
BE DEDICATED TO THE
TOWN OF HUNTINGTON
AREA: 575 SQ.FT.
0.01 AC.
LOT 6
#40 AND #42
MAKAMAH
ROAD
2.00 AC
NO WELLS WITHIN 150'
MAKAMAH ROAD
W.WATER MAIN
100' SETBACK LINE FROM
WETLANDS
LOT 5
THE PRESERVE
AT INDIAN HILLS
CONDOMINIUM 3
(36 UNITS)
14.46 AC
0+00
1+00
100' SETBACK LINE
FROM WETLANDS
PROPOSED
CLUBHOUSE
145.62'
LOT 4
GOLF ASSOCIATION 2
(PROPOSED CLUBHOUSE,
FITNESS CENTER
AND DRIVING RANGE)
11.95 AC
COUNTRY CLUB
DRIVE
SERENE
PLACE
RIM=92.35
BREEZE HILL ROAD
NO WELLS WITHIN 150'
LAND NOW OR FORMERLY OF
TRUTESCU
(S.C.T.M. 400-15-2-1)
ZONE: R-40 RES
PROPOSED WIDENING TO
BE DEDICATED TO THE
TOWN OF HUNTINGTON
AREA: 5,834 SQ.FT.
0.13 AC.
LAND NOW OR FORMERLY OF
STEINSVOLD (REV. TRUST)
(S.C.T.M. 400-15-2-16)
ZONE: R-40 RES
LAND NOW OR FORMERLY OF
MARTINO
(S.C.T.M. 400-15-1-13)
ZONE: R-40 RES
LAND NOW OR FORMERLY OF
MATTUTAT
(S.C.T.M. 400-15-2-17)
ZONE: R-40 RES
LAND NOW OR FORMERLY OF
GREENFIELD
(S.C.T.M. 400-15-1-14)
ZONE: R-40 RES
LAND NOW OR FORMERLY OF
SHAMPINATO
(S.C.T.M. 400-15-1-15)
ZONE: R-40 RES
NO WELLS WITHIN 150'
LAND NOW OR FORMERLY OF
DANTONI
(S.C.T.M. 400-15-3-31.16)
ZONE: R-40 RES
NO WELLS WITHIN 150'
LAND NOW OR FORMERLY OF
BOZZELLA
(S.C.T.M. 400-15-3-8.2)
ZONE: R-40 RES

(1) LAND NOW OR FORMERLY OF
JEROME
(S.C.T.M. 400-15-1-20)
ZONE: R-40 RES

(2) LAND NOW OR FORMERLY OF
BUBARIS
(S.C.T.M. 400-15-1-17)
ZONE: R-40 RES

(3) LAND NOW OR FORMERLY OF
BERG
(S.C.T.M. 400-15-1-18)
ZONE: R-40 RES

(4) LAND NOW OR FORMERLY
OF ROBERG
REVOCABLE LIVING TRUST
(S.C.T.M. 400-15-1-2.1)
ZONE: R-40 RES

(5)LAND NOW OR FORMERLY OF
FEDERICO
(S.C.T.M. 400-15-1-4)
ZONE: R-40 RES

(6) LAND NOW OR FORMERLY
OF EMORY
REVOCABLE LIVING TRUST
(S.C.T.M. 400-15-1-1)
ZONE: R-40 RES

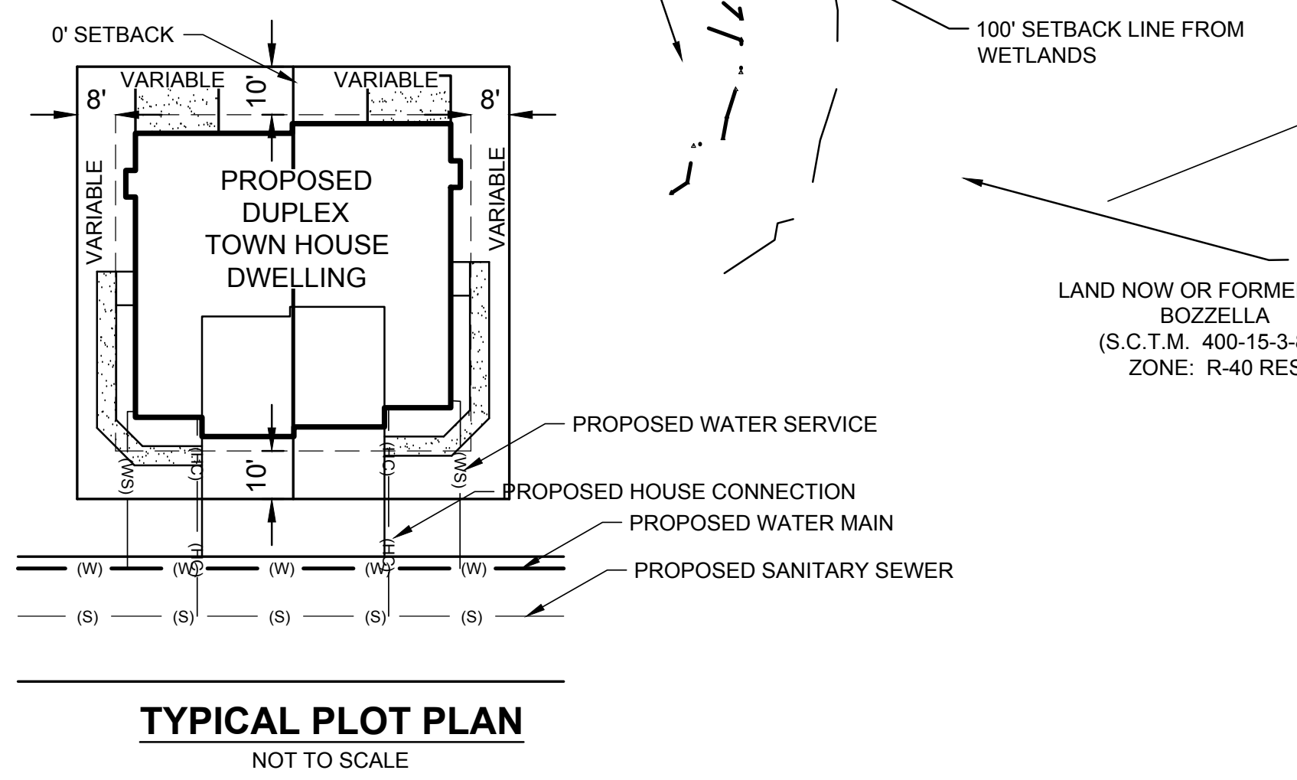
0' SETBACK
VARIABLE
VARIABLE
8'
8'
10'
10'
VARIABLE
VARIABLE
PROPOSED
DUPLEX
TOWN HOUSE
DWELLING
(WS)
(HC)
(HC)
(WS)
(W)
(S)
PROPOSED WATER SERVICE
PROPOSED HOUSE CONNECTION
PROPOSED WATER MAIN
PROPOSED SANITARY SEWER

TYPICAL PLOT PLAN

NOT TO SCALE

IT IS A VIOLATION OF NEW YORK STATE EDUCATION LAW ARTICLE 145, PROFESSIONAL ENGINEERING AND LAND SURVEYING, SECTION 7209 FOR ANY PERSON, UNLESS HE IS ACTING UNDER THE DIRECTION OF A LICENSED PROFESSIONAL ENGINEER OR LAND SURVEYOR, TO ALTER AN ITEM IN ANY WAY. IF AN ITEM BEARING THE SEAL OF AN ENGINEER OR LAND SURVEYOR IS ALTERED, THE ALTERING ENGINEER OR LAND SURVEYOR SHALL AFFIX TO THE ITEM HIS SEAL AND NOTATION "ALTERED BY" FOLLOWED BY HIS SIGNATURE AND THE DATE OF SUCH ALTERATION, AND SPECIFIC DESCRIPTION OF THE ALTERATION.

EXISTING

P92.59	PAVEMENT ELEVATION
TC92.59	TOP OF CURB ELEVATION
BC92.2	BOTTOM OF CURB ELEVATION
X92.0	SPOT ELEVATION
⊠	ELECTRIC BOX
⊠	PULL BOX
	FIRE HYDRANT
G	GAS VALVE
WV	WATER VALVE
T	TRANSFORMER
	ELECTRIC POLE
✲	LIGHT POLE
⊠	HIGH TENSION TOWER
W.M.	WATER MAIN
W.S.	WATER SERVICE
G.M.	GAS MAIN

94	CONTOUR
E	ELECTRIC
W	WATER
G	GAS
X	FENCE
S	SANITARY SEWER
T	TELEPHONE
OHW	OVERHEAD WIRE
D	DRAINAGE
CATV	TELEVISION
◎	DRAINAGE MANHOLE
▦	CATCH BASINS
✵	TREE TO BE REMOVED
	DECIDUOUS TREE TO REMAIN
✵	EVERGREEN TREE TO REMAIN
□	MONUMENT

PROPOSED

(TC92.00)	TOP OF CURB ELEVATION
(BC91.5)	BOTTOM OF CURB ELEVATION
x(92.0)	SPOT ELEVATION
LP	LEACHING POOL
CB	CATCH BASIN
SMH	SANITARY MANHOLE
DMH	DRAINAGE MANHOLE
(93)	CONTOUR
⊜	LEACHING POOL W/ OPEN GRATE
⊙	LEACHING POOL W/ SOLID COVER
▣	DRAINAGE BASIN
■	CATCH BASIN (TC ~ TOP OF CURB BOX)
	HYDRANT
⊕ PS	STREET TREE W / SYMBOL

(W)	WATER
(FS)	FIRE SERVICE
(WS)	WATER SERVICE
(E)	ELECTRIC
(G)	GAS
X	FENCE
(HC)	SANITARY HOUSE CONNECTION
(D)	DRAINAGE
(RD)	ROOF DRAIN
(T)	TELEPHONE
(CATV)	TELEVISION
▨	CONCRETE WALK
/ — / — /	LIMIT OF CLEARING AND GRADING DURING CONSTRUCTION
▨	SAWCUT W/ PAVEMENT TO BE REMOVED
⊕	TEST HOLE
— — —	DRAINAGE RIDGELINE
■	PROPOSED MONUMENT

SITE DATA:

AREA OF SITE:
NORTH PARCEL:

AREA IN WIDENING (DED, TO T.O.H.)	0.13 ACRES
AREA IN CONDOMINIUM LOTS:	10.29 ACRES
AREA IN GOLF ASSOCIATION LOT:	115.72 ACRES
TOTAL AREA:	126.14 ACRES

SOUTH PARCEL:

AREA IN LOT 75:	2.00 ACRES
AREA IN WIDENING (DED, TO T.O.H.)	0.01 ACRES
AREA IN CONDOMINIUM LOT:	14.46 ACRES
AREA IN GOLF ASSOCIATION LOT:	11.95 ACRES
TOTAL AREA:	28.42 ACRES
TOTAL SITE AREA:	154.56 ACRES

CONDOMINIUM UNITS
NORTHWEST: 24 UNITS
NORTHEAST: 14 UNITS
SOUTH: 36 UNITS
74 UNITS
TWO SINGLE FAMILY DWELLINGS - LOT 6
TOTAL SINGLE FAMILY DWELLINGS: 76
ZONE: R-40
S.C.T.M.: 0400-014-04-1, 2
0400-015-01- 3.1, 3.2, 11, 12, 16, 19 AND P/O 22
SCHOOL DISTRICT: NORTHPORT
WATER DISTRICT: SUFFOLK COUNTY WATER AUTHORITY
FIRE DISTRICT: NORTHPORT
REFUSE DISTRICT: No. 02 - ALPHA CARTING
POST OFFICE: NORTHPORT
□ EXISTING MONUMENT
■ PROPOSED MONUMENT

BOUNDARY INFORMATION WAS COMPILED FROM A TOPOGRAPHIC SURVEY PREPARED BY O'CONNOR-PETITO, LLP DATED JUNE 11, 2012, AND UPDATED DECEMBER 7, 2017

THIS PROPERTY LIES WHOLLY WITHIN ZONE X OF THE FEMA FLOOD INSURANCE RATE MAP. MAP ID 36103C0341H EFFECTIVE DATE 9-25-09. COMMUNITY: TOWN OF HUNTINGTON COMMUNITY No. 360796 PANEL 341 of 3626 MAP SUFFIX: H.

SHEET INDEX:

1. OVERALL PLAN *(C-100)*
2. EXISTING FEATURES DEMOLITION PLAN *(C-101)*
3. ALIGNMENT PLAN - NORTH PARCEL *(C-102)*
4. ALIGNMENT PLAN - SOUTH PARCEL *(C-103)*
5. CLUBHOUSE ALIGNMENT PLAN *(C-104)*
6. GRADING PLAN 1*(C-105)*
7. GRADING PLAN 2 *(C-106)*
8. GRADING PLAN 3 *(C-107)*
9. GRADING PLAN 4 *(C-108)*
10. GRADING PLAN 5 *(C-109)*
11. GRADING PLAN 6 *(C-110)*
12. GRADING PLAN 7 *(C-111)*
13. GRADING PLAN 8 *(C-112)*
14. GRADING PLAN 9 *(C-113)*
15. GRADING PLAN 10 (C-114)
16. UTILITY PLAN 1 *(C-115)*
17. UTILITY PLAN 2 *(C-116)*
18. UTILITY PLAN 3 *(C-117)*
19. UTILITY PLAN 4 *(C-118)*
20. UTILITY PLAN 5 *(C-119)*
21. OVERALL DRAINAGE PLAN - NORTH PARCEL *(C-120)*
22. OVERALL DRAINAGE PLAN - SOUTH PARCEL *(C-121)*
23. PROFILES 1 *(C-122)*
24. PROFILES 2 *(C-123)*
25. PROFILES 3 *(C-124)*
26. PROFILES 4 *(C-125)*
27. SEDIMENT AND EROSION CONTROL PLAN 1 *(C-126)*
28. SEDIMENT AND EROSION CONTROL PLAN 2 *(C-127)*
29. SEDIMENT AND EROSION CONTROL PLAN 3 *(C-128)*
30. LANDSCAPE PLAN 1 *(LP-101)*
31. LANDSCAPE PLAN 2 *(LP-102)*
32. LANDSCAPE PLAN 3 *(LP-103)*
33. LIGHTING PLAN - NORTH PARCEL *(LI-101)*
34. LIGHTING PLAN - SOUTH PARCEL *(LI-102)*
35. DRAINAGE DETAILS *(C-501)*
36. DRAINAGE DETAILS II *(C-502)*
37. SITE DETAILS *(C-503)*
38. SEDIMENT AND EROSION CONTROL DETAILS *(C-504)*
39. ACCESSIBILITY DETAILS, RAMPS AND NOTES *(C-505)*
40. RETAINING WALL SECTIONS *(C-506)*
41. RETAINING WALL DETAILS *(C-507)*
42. TEST BORING PLAN - NORTH PARCEL *(TB-101)*
43. TEST BORING PLAN - SOUTH PARCEL *(TB-102)*
44. TEST BORING LOGS - 1 *(TB-103)*
45. TEST BORING LOGS - 2 *(TB-104)*
46. TEST BORING LOGS - 3 *(TB-105)*

SCALE: 1" = 200'

0 50 100 200 400

GENERAL NOTES

1. NELSON & POPE SHALL NOT BE RESPONSIBLE FOR CONSTRUCTION MEANS, METHODS, TECHNIQUES OR PROCEDURES UTILIZED BY THE CONTRACTOR, NOR FOR THE SAFETY OF THE PUBLIC OR CONTRACTOR'S EMPLOYEES, OR FOR THE FAILURE OF THE CONTRACTOR TO CARRY OUT THE WORK IN ACCORDANCE WITH THE CONTRACT DOCUMENTS.
2. OWNER/CONTRACTOR SHALL BE RESPONSIBLE FOR OBTAINING AND COMPLYING WITH ALL PERMITS THAT WILL BE REQUIRED FOR THE CONSTRUCTION OF THIS PROJECT FROM START TO FINISH, INCLUDING BUT NOT LIMITED TO PERMITS FOR MUNICIPAL ROAD AND CURB CUT CONSTRUCTION; GAS, ELECTRIC, TELEPHONE, AND CABLE INSTALLATION; WATER MAIN AND SERVICE INSTALLATION; SITE CLEARING AND TREE REMOVAL; EXCAVATION; SITE IMPROVEMENTS; DEMOLITION; AND BUILDING CONSTRUCTION. CONTRACTOR SHALL COORDINATE THE REQUIRED UTILITY AND MUNICIPAL INSPECTIONS.
3. LOCATION OF ALL EXISTING UTILITIES SHALL BE VERIFIED BY CONTRACTOR PRIOR TO EXCAVATION. CONTRACTOR SHALL NOTIFY OWNER PRIOR TO COMMENCING CONSTRUCTION OF ANY DISCREPANCIES BETWEEN ACTUAL FIELD LOCATIONS AND INFORMATION REPRESENTED ON PLAN, FOR DIRECTION. EXISTING UTILITY LOCATIONS SHOWN ON THE PLANS IS BASED ON AVAILABLE INFORMATION AND FOR INFORMATIONAL PURPOSES ONLY. CONTRACTOR IS SOLELY RESPONSIBLE FOR LOCATING AND IDENTIFYING ALL EXISTING UTILITIES WITHIN THE LIMITS OF CONSTRUCTION.
4. CONTRACTOR SHALL BE RESPONSIBLE FOR OBTAINING ANY AND ALL PERMITS NECESSARY FOR THE REMOVAL AND DISPOSAL OF ANY EXCAVATED AND DEMOLISHED MATERIALS AND DEBRIS.
5. UNSUITABLE MATERIAL (AS DEFINED IN THE REQUIREMENTS OF THE MUNICIPAL AGENCY HAVING JURISDICTION AND AS A MINIMUM DEFINED IN SECTION 203 OF N.Y.S.D.O.T. STANDARD SPECIFICATIONS, LATEST EDITION) UNDER PAVEMENT, WALKS AND CONCRETE SLABS OR AS INDICATED WITHIN THE SITE WORK CONTRACT DOCUMENTS, SHALL BE REMOVED AND REPLACED WITH SELECT GRANULAR MATERIAL.
6. SELECT GRANULAR FILL/MATERIAL SHALL BE AS DEFINED IN THE REQUIREMENTS OF THE MUNICIPAL AGENCY HAVING JURISDICTION AND AS A MINIMUM DEFINED IN SECTION 203 OF N.Y.S.D.O.T. STANDARD SPECIFICATIONS, LATEST EDITION.
7. COMPACTION SHALL CONFORM TO THE REQUIREMENTS OF THE MUNICIPAL AGENCY HAVING JURISDICTION AND AS A MINIMUM DEFINED IN SECTION 203 OF N.Y.S.D.O.T. STANDARD SPECIFICATIONS, LATEST EDITION.
8. ALL EXISTING STRUCTURES AND SITE IMPROVEMENTS SPECIFIED TO BE REMOVED, SHALL BE COMPLETELY REMOVED AND BACKFILLED. BACKFILL TO BE SELECT GRANULAR FILL, COMPACTED TO 95% MAXIMUM DENSITY AT OPTIMUM MOISTURE CONTENT, AS DETERMINED BY MODIFIED PROCTOR TEST, UNLESS OTHERWISE NOTED.
9. DEBRIS SHALL NOT BE BURIED ON THE SUBJECT SITE. ALL UNSUITABLE MATERIAL, SURPLUS MATERIAL AND DEBRIS SHALL BE DISPOSED OF IN ACCORDANCE WITH ALL LOCAL, TOWN, COUNTY, STATE AND FEDERAL LAWS AND APPLICABLE CODES.
10. ALL MUNICIPAL AGENCIES HAVING JURISDICTION DURING CONSTRUCTION SHALL BE NOTIFIED A MINIMUM OF FORTY-EIGHT (48) HOURS IN ADVANCE OF ALL CONSTRUCTION, UNLESS OTHERWISE INDICATED AS A CONDITION OF MUNICIPAL APPROVAL OR PERMIT. CONTRACTOR SHALL BE RESPONSIBLE FOR COORDINATING AND INSURING ALL NECESSARY MUNICIPAL INSPECTIONS, CONDITIONS OF APPROVAL, AND CERTIFICATIONS ARE PERFORMED AND OBTAINED IN ACCORDANCE TO THE APPLICABLE PERMITS AND MUNICIPAL REQUIREMENTS.
11. INSTALLATION AND SERVICE COORDINATION OF GAS SERVICE IS THE RESPONSIBILITY OF THE CONTRACTOR. ALL WORK SHALL CONFORM, AS A MINIMUM, TO THE REQUIREMENTS OF NATIONAL GRID.
12. INSTALLATION AND SERVICE COORDINATION OF ELECTRIC SERVICE IS THE RESPONSIBILITY OF THE CONTRACTOR. ALL WORK SHALL CONFORM, AS A MINIMUM, TO THE REQUIREMENTS OF PSEG LONG ISLAND.
13. CONTRACTOR SHALL REFER TO ARCHITECTURAL PLANS FOR EXACT LOCATIONS AND DIMENSIONS VESTIBULES, SLOPED PAVING, PORCHES, RAMPS, GARAGES, ROOF LEADERS, PRECISE BUILDING DIMENSIONS AND BUILDING UTILITY ENTRANCES.
14. ALL LIGHT POLES, LIGHT FIXTURE CONFIGURATIONS, AND COLOR SHALL BE APPROVED BY OWNER OR OWNER'S REPRESENTATIVE, PRIOR TO INSTALLATION. INSTALLATION OF SITE ELECTRIC SHALL BE AS DETAILED BY OTHERS.
15. CONTRACTOR SHALL BE RESPONSIBLE FOR OBTAINING ALL PERMITS NECESSARY FOR THE INSTALLATION OF SIGNS.
16. SPEED BUMPS, BUMPER STOPS, OR WHEEL STOPS ARE NOT PERMITTED.
17. THE CONTRACTOR SHALL BE RESPONSIBLE FOR THE IMPLEMENTATION OF EROSION CONTROL MEASURES PROTECTING NEW AND EXISTING IMPROVEMENTS AND ADJACENT PROPERTIES CONFORMING TO THE FEDERAL, STATE, COUNTY, AND LOCAL MUNICIPAL REQUIREMENTS. EROSION CONTROL IS THE SOLE RESPONSIBILITY OF THE CONTRACTOR. SEDIMENT AND EROSION CONTROL MEASURES SHALL BE IMPLEMENTED AND IN PLACE PRIOR TO THE COMMENCEMENT OF ANY CONSTRUCTION ACTIVITY. MEASURES SHALL BE MAINTAINED AND MODIFIED AS NECESSARY THROUGHOUT THE IMPROVEMENT CONSTRUCTION AND SHALL NOT BE REMOVED UNTIL ACCEPTANCE OF IMPROVEMENT CONSTRUCTION BY LOCAL MUNICIPALITY HAVING JURISDICTION.
18. CONTRACTOR SHALL BE RESPONSIBLE FOR FURNISHING AND INSTALLING PERMANENT TRAFFIC CONTROL DEVICES IN CONFORMANCE WITH THE FEDERAL HIGHWAY ADMINISTRATION MANUAL OF UNIFORM TRAFFIC CONTROL DEVICES (MUTCD), LATEST EDITION, IN CONJUNCTION WITH THE LATEST EDITION OF ANY NEW YORK STATE SUPPLEMENTS TO SUCH. THE CONTRACTOR SHALL ADHERE TO ANY ADDITIONAL LOCAL REQUIREMENTS AND/OR CONDITIONS OF ANY MUNICIPAL PERMITS AND THE APPROVED CONTRACTOR DOCUMENTS. THE CONTRACTOR SHALL NOT AMEND EXISTING OR APPROVED TRAFFIC CONTROL DEVICES WITHOUT EXPRESSED WRITTEN APPROVAL OF ANY AGENCIES HAVING JURISDICTION OVER SUCH.
19. ALL DRAINAGE PIPE SHALL BE SMOOTH INTERIOR CORRUGATED POLYETHYLENE PIPE (CPP) AS MANUFACTURED BY ADS, TYPE N-12 SOIL TIGHT PIPE.
20. CONTRACTOR SHALL BE RESPONSIBLE FOR INSTALLING HANDICAP ACCESS RELATED IMPROVEMENTS IN ACCORDANCE WITH THE LATEST APPLICABLE FEDERAL, STATE AND LOCAL HANDICAP ACCESSIBILITY REGULATIONS, REQUIREMENTS AND LAWS INCLUDING, BUT NOT LIMITED TO: BUILDING ACCESS, HANDICAP ACCESSIBLE ROUTE, LANDINGS, PARKING, RAILINGS AND SIGNAGE.
21. NOTWITHSTANDING ANYTHING HEREON TO THE CONTRARY, CONTRACTOR SHALL BE RESPONSIBLE FOR CONSTRUCTION OF ALL ACCESSIBLE ROUTES TO ALL REQUIRED ACCESSIBLE FIRST FLOOR UNITS AND COMMON AREAS (INCLUDING TRASH DISPOSAL AND MAIL PICK-UP) STRICTLY IN ACCORDANCE WITH ALL APPLICABLE FEDERAL, STATE AND LOCAL REGULATIONS, INCLUDING, WITHOUT LIMITATION, THE FAIR HOUSING ACT, AMERICANS WITH DISABILITIES ACT ("ADA"), NEW YORK STATE BUILDING CODE, TOWN AND COUNTY STANDARDS, AND REFERENCE STANDARDS CONTAINED THEREIN. ACCESSIBLE ROUTES SHALL COMPLY WITH THE ACCESSIBILITY DETAILS AND NOTES CONTAINED HEREIN.
22. ALL HANDICAP RAMPS, PARKING SPACES AND ACCESS ISLES SHALL BE IN COMPLIANCE WITH THE LATEST BUILDING CODE OF NEW YORK STATE AND ICC/ANSI A117.1-2003 STANDARDS.
23. PREPARATION OF SOIL AND PLANTINGS SHALL BE ACCORDING TO SPECIFICATIONS SET FORTH UNDER SECTION 8.3 OF THE TOWN OF HUNTINGTON SUBDIVISION AND SITE PLAN REGULATIONS.
24. ALL AREAS THAT HAVE BEEN DISTURBED SHALL BE SEEDED UNLESS OTHERWISE NOTED.
25. THE PROPOSED GUTTER GRADES (0.50% MIN.) SHALL BE ESTABLISHED BY MAINTAINING A CROSS SLOPE OF 1/4"/FT. TO 1/2"/FT. DOWN FROM THE EDGE OF PAVEMENT WHILE MAINTAINING A MINIMUM GUTTER SLOPE OF 0.50%.
26. ANY UTILITIES REQUIRED TO BE RELOCATED DUE TO INSTALLATION OF THE REQUIRED IMPROVEMENTS SHALL BE RELOCATED AT THE EXPENSE OF THE APPLICANT/DEVELOPER/OWNER.
27. ANY RETAINING WALL 4' OR MORE IN HEIGHT SHALL REQUIRE APPROVAL BY THE TOWN ENGINEER AND A PERMIT ISSUED BY THE DIRECTOR OF BUILDING AND HOUSING. IT IS THE APPLICANTS RESPONSIBILITY TO OBTAIN THE NECESSARY PERMITS FOR ALL SUCH RETAINING WALL PRIOR TO CONSTRUCTION.
28. ALL DISTURBED SOIL AREAS, EXCLUDING PAVED AREAS AND RECHARGE BASINS, MUST BE COVERED WITH A MINIMUM OF 8" (INCHES) OF NATIVE TOPSOIL PRIOR TO THE REMOVAL OF EXCESS TOPSOIL. WHEN ADEQUATE SUPPLY OF ON-SITE TOPSOIL IS UNAVAILABLE, THE DEVELOPER SHALL BRING IN TOPSOIL TO PROVIDE A DEPTH OF 6" (INCHES). ALL FINISHED GRADE SLOPES SHALL BE STABILIZED AS SOON AS POSSIBLE.
29. ALL EXCAVATED SOIL SHALL REMAIN ON-SITE. THE REMOVAL OF TOPSOIL SHALL BE PROHIBITED .THE DEVELOPER/ OWNER SHALL COMPLY WITH ARTICLE XII 198-79E. REMOVAL OF EXCESS TOPSOIL OR OTHER EARTH.
30. CONTRACTOR TO PROVIDE 3'-6" HIGH RAILING ALONG TOP OF RETAINING WALLS WITH A HEIGHT OF 29" AND GREATER ABOVE FINISHED GRADE. RAILINGS SHALL COMPLY WITH SECTION 1013 GUARDS OF THE BCNYS.
31. ALL ROOF DRAIN PIPE TO BE SDR-35.
32. THE APPLICANT SHALL OBTAIN A DEMOLITION PERMIT FROM THE BUILDING DEPARTMENT PRIOR TO THE REMOVAL OF ANY STRUCTURE. STRUCTURES DEPICTED FOR REMOVAL SHALL BE REMOVED PRIOR TO THE SIGNING OF THE MAP AND PROOF OF COMPLIANCE SHALL BE SUBMITTED TO THE PLANNING DEPARTMENT.
33. ALL IMPROVEMENTS SHALL BE IN COMPLIANCE WITH THE LATEST TOWN OF HUNTINGTON SUBDIVISION AND SITE PLAN REGULATIONS.
34. A HIGHWAY WORK PERMIT / HOLD HARMLESS AGREEMENT SHALL BE OBTAINED FROM THE TOWN HIGHWAY OFFICE PRIOR TO ANY WORK PERFORMED IN AN EXISTING TOWN RIGHT OF WAY.
35. PRIOR TO THE START OF CONSTRUCTION, THE APPLICANT/OWNER/BUILDER/DEVELOPER SHALL ATTEND A PRE-CONSTRUCTION MEETING WITH THE DEPARTMENT OF ENGINEERING SERVICES.
36. PRIOR TO THE START OF CONSTRUCTION, THE CLEARING AND GRADING LIMITS SHALL BE MARKED WITH BRIGHTLY COLORED CONSTRUCTION FENCE AND MAINTAINED THROUGHOUT THE CONSTRUCTION OF THE PROJECT.
37. GRADING OF LOTS INCLUDING OF SLOPES ON THIS MAP SHALL BE LIMITED TO THE EXTENT OF CLEARING AND GRADING AS SHOWN ON THE APPROVED SITE PLANS. EACH INDIVIDUAL LOT SHALL BE TEMPORARILY AND/ OR PERMANENTLY STABILIZED IMMEDIATELY FOLLOWING THE BACKFILLING OF THE FOUNDATION IN ACCORDANCE WITH HUNTINGTON, NEW YORK MUNICIPAL CODE, CHAPTER A202, § 8.4.
38. ALL PROPOSED UTILITIES SHALL BE INSTALLED UNDERGROUND.
39. ANY UTILITIES REQUIRED TO BE REMOVED/ RELOCATED DUE TO THE INSTALLATION OF THE REQUIRED IMPROVEMENTS SHALL BE DONE SO AT THE EXPENSE OF THE APPLICANT/DEVELOPER.
40. ALL TRAFFIC ROAD MARKINGS, ROAD SIGNS, AND LIGHT SIGNALS THAT MAY HAVE BEEN MOVED OR DAMAGED IN THE PROCESS OF CONSTRUCTION SHALL BE RESTORED AT THE APPLICANT'S EXPENSE TO AT LEAST THE SAME QUALITY AND CHARACTERISTICS THAT EXISTED BEFORE CONSTRUCTION BEGAN. THE APPLICANT SHALL BE FURTHER RESPONSIBLE TO INSURE THAT, IN THE ROADWAYS ADJACENT TO THE CONSTRUCTION SITE, THESE MARKINGS, SIGNS, AND SIGNALS, ARE MAINTAINED AND THAT PROTECTION OF TRAFFIC IS MAINTAINED DURING THE ENTIRE PERIOD OF CONSTRUCTION. IF REPLACEMENT OR UPGRADE IS REQUIRED, IT MUST BE APPROVED BY THE TOWN OF HUNTINGTON DEPARTMENT OF TRANSPORTATION AND TRAFFIC SAFETY.
41. FOLLOWING SUBDIVISION AND IMPLEMENTATION OF APPROVED PLANS, THE REMOVAL, DESTRUCTION OR ALTERATION OF TREES AND WOODLAND SHALL BE SUBJECT TO TOWN CODE CHAPTER 186- TREE PRESERVATION LAW.
42. NO PLOT MAY BE SUBDIVIDED OR CHANGED IN ANY MANNER AT ANY FUTURE DATE EXCEPT BY SPECIAL ACTION OF THE HUNTINGTON TOWN PLANNING BOARD.
43. DATUM: NAVD 88
44. ALL DEBRIS SHALL BE REMOVED FROM THE SITE IN ACCORDANCE WITH ALL STATE, COUNTY, TOWN, AND HEALTH DEPARTMENT REQUIREMENTS.
45. THERE ARE NO WELLS WITHIN 150' OF THE SITE.
46. THE TOWN RIGHT - OF - WAY IS NOT TO BE USED FOR STORAGE OR STAGING OF EQUIPMENT OR MATERIALS DURING CONSTRUCTION. THE DEVELOPER WILL BE RESPONSIBLE FOR MAINTAINING THE TOWN RIGHT - OF - WAY DURING CONSTRUCTION AND SHOULD INSTALL FENCING ALONG THE PROPERTY FRONTAGE TO LIMIT ACCESS FOR CONSTRUCTION VEHICLES TO DEFINED POINTS OF INGRESS/EGRESS.
47. AS-BUILT DRAINAGE AND AS-BUILT CURB PLANS SHALL BE SUBMITTED TO THE TOWN ENGINEER IN THE PROPER SEQUENCE IN ACCORDANCE WITH HUNTINGTON, NEW YORK, MUNICIPAL CODE, CHAPTER A202, § 7.3.2.
48. ALL EXISTING STRUCTURES, UTILITIES AND RELATED APPERTENCES INDICATED TO BE REMOVED SHALL BE DONE IN ACCORDANCE WITH ALL STATE, COUNTY, TOWN AND S.C.D.H.S. REGULATIONS.

NOTE:

- ALL PROPOSED ROADS WITHIN THE SITE SHALL BE OWNED AND MAINTAINED BY THE HOMEOWNERS ASSOCIATION.
- ALL ROADS SHALL REMAIN AS PRIVATE IN PERPETUITY AND NO OFFER OF DEDICATION SHALL BE MADE IN THE FUTURE.
- A BLANKET EASEMENT SHALL BE PROVIDED TO THE HOMEOWNERS ASSOCIATION FOR ALL DRAINAGE, SANITARY AND WATER APPURTENANCES LOCATED WITHIN EACH LOT FOR THE PURPOSE OF OWNERSHIP AND MAINTENANCE OF THE SAID STRUCTURES.

FOR TOWN USE

No.	REVISION	DATE

OWNER
I.H.C.C., INC. AND
ROBERG REVOCABLE TRUST
21 BREEZE HILL ROAD
NORTHPORT, NY, 11768
(631) 261 - 5700

APPLICANT:
THE PRESERVE AT INDIAN HILLS
1 RABRO DRIVE, SUITE 100
HAUPPAUGE, N.Y. 11788
(631) 351 - 4000

OVERALL PLAN
FOR
THE PRESERVE AT INDIAN HILLS
SITUATED AT
NORTHPORT
TOWN OF HUNTINGTON, SUFFOLK COUNTY, NEW YORK
S.C.T.M.: DISTRICT: 0400, SECT. 014, BLK. 04, LOTS 1 AND 2
DISTRICT 0400, SECT. 015, BLK. 01, LOTS 3.1, 3.2, 11, 12, 16, 19 AND P/O 22

THOMAS CHARLES DIXON

NELSON + POPE
engineers • architects • surveyors
70 Maxess Road, Melville, NY 11747 • 631.427.5665 • nelsonpope.com

DRAWN BY: GEO	CADD No.: 86047 CSP 2021.DWG	SCALE: 1"=200'	DRAWING NO.: C - 100
CHECKED BY: JM	FILE NO.: 400-014		
DATE: OCTOBER, 2021	PROJECT NO.: 86047		SHEET NO.: 1 OF 44

G:\projects\86047\FINALS\CONDOMINIUM\86047 CSP 2021.dwg, 1 OF 44 OVERALL PLAN, 10/11/2021 2:16:11 PM

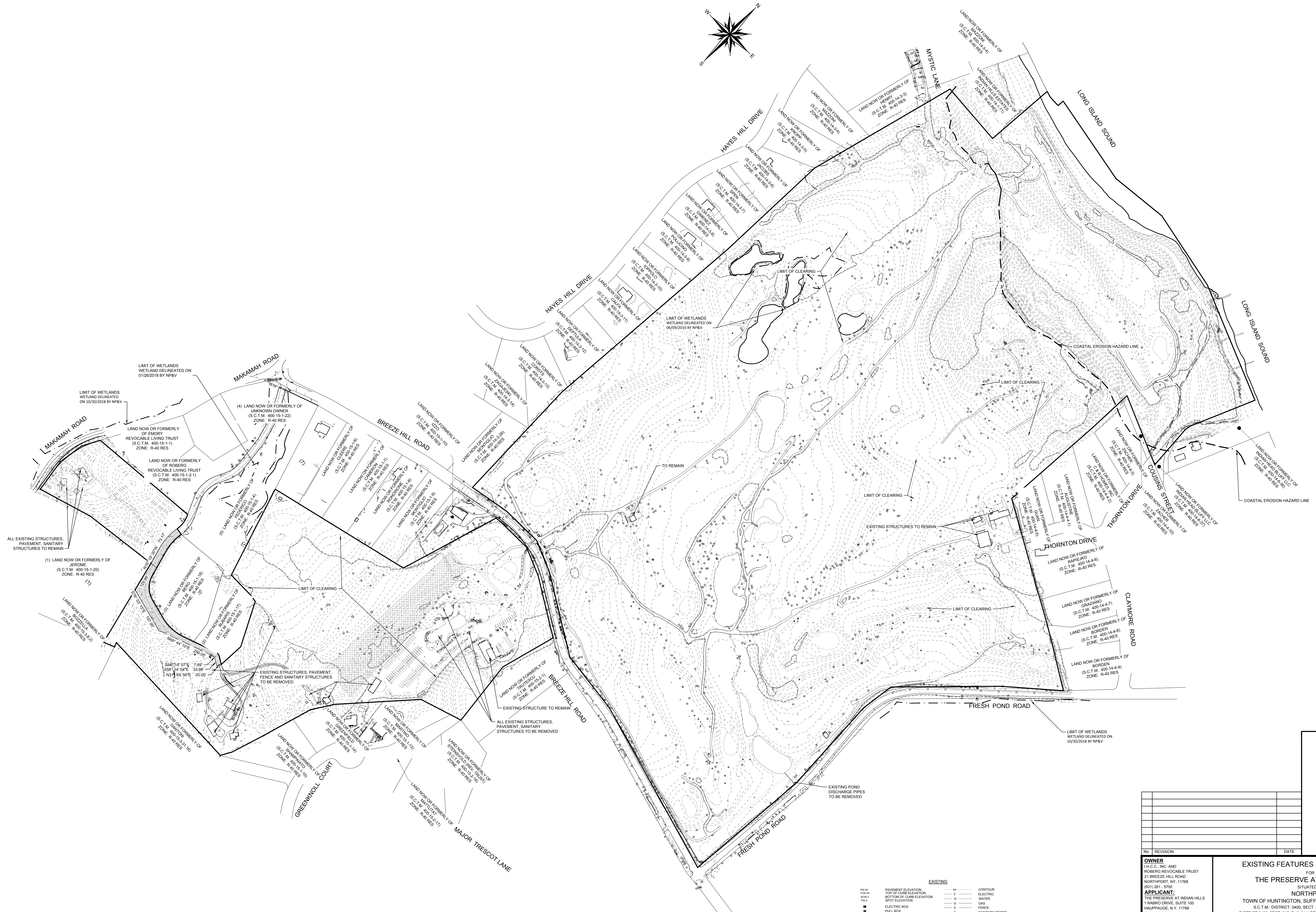
N
E
S
W
MYSTIC LANE
LONG ISLAND SOUND
LONG ISLAND SOUND
HAYES HILL DRIVE
HAYES HILL DRIVE
MAKAMAH ROAD
MAKAMAH ROAD
BREEZE HILL ROAD
BREEZE HILL ROAD
COUSINS STREET
THORNTON DRIVE
THORNTON DRIVE
CLAYMORE ROAD
FRESH POND ROAD
FRESH POND ROAD
GREENKNOLL COURT
MAJOR TRESCOT LANE
LIMIT OF CLEARING
LIMIT OF WETLANDS WETLAND DELINEATED ON 06/09/2016 BY NP&V
LIMIT OF WETLANDS WETLAND DELINEATED ON 01/26/2018 BY NP&V
LIMIT OF WETLANDS WETLAND DELINEATED ON 10/30/2018 BY NP&V
LIMIT OF WETLANDS WETLAND DELINEATED ON 10/30/2018 BY NP&V
COASTAL EROSION HAZARD LINE
COASTAL EROSION HAZARD LINE
TO REMAIN
EXISTING STRUCTURES TO REMAIN
EXISTING STRUCTURE TO REMAIN
ALL EXISTING STRUCTURES, PAVEMENT, SANITARY STRUCTURES TO REMAIN
EXISTING STRUCTURES, PAVEMENT, FENCE AND SANITARY STRUCTURES TO BE REMOVED.
ALL EXISTING STRUCTURES, PAVEMENT, SANITARY STRUCTURES TO BE REMOVED
EXISTING POND DISCHARGE PIPES TO BE REMOVED
(1) LAND NOW OR FORMERLY OF JEROME (S.C.T.M. 400-15-1-20) ZONE: R-40 RES
LAND NOW OR FORMERLY OF EMORY REVOCABLE LIVING TRUST (S.C.T.M. 400-15-1-1) ZONE: R-40 RES
LAND NOW OR FORMERLY OF ROBERG REVOCABLE LIVING TRUST (S.C.T.M. 400-15-1-2.1) ZONE: R-40 RES
(4) LAND NOW OR FORMERLY OF UNKNOWN OWNER (S.C.T.M. 400-15-1-22) ZONE: R-40 RES
LAND NOW OR FORMERLY OF RAPIEJKO (S.C.T.M. 400-14-4-6) ZONE: R-40 RES
LAND NOW OR FORMERLY OF GRAZIANO (S.C.T.M. 400-14-4-7) ZONE: R-40 RES
LAND NOW OR FORMERLY OF BORDEN (S.C.T.M. 400-14-4-8) ZONE: R-40 RES
LAND NOW OR FORMERLY OF BORDEN (S.C.T.M. 400-14-4-9) ZONE: R-40 RES
LAND NOW OR FORMERLY OF HENRY (S.C.T.M. 400-14-3-3) ZONE: R-40 RES
S64°14'57"E 7.89'
S58°14'04"E 33.66'
N31°45'56"E 20.00'
N69°44'10"E

EXISTING

P92.59	PAVEMENT ELEVATION	94	CONTOUR
TC92.59	TOP OF CURB ELEVATION	E	ELECTRIC
BC92.2	BOTTOM OF CURB ELEVATION	W	WATER
X92.0	SPOT ELEVATION	G	GAS
⊠	ELECTRIC BOX	X	FENCE
⊠	PULL BOX	S	SANITARY SEWER
	FIRE HYDRANT	T	TELEPHONE
G	GAS VALVE	OHW	OVERHEAD WIRE
WV	WATER VALVE	D	DRAINAGE
T	TRANSFORMER	CATV	TELEVISION
	ELECTRIC POLE	⊚	DRAINAGE MANHOLE
✲	LIGHT POLE	▦	CATCH BASINS
⊠	HIGH TENSION TOWER		
W.M.	WATER MAIN		
W.S.	WATER SERVICE		
G.M.	GAS MAIN		

SCALE: 1" = 150'

0 50 100 200 400

IT IS A VIOLATION OF NEW YORK STATE EDUCATION LAW ARTICLE 145, PROFESSIONAL ENGINEERING AND LAND SURVEYING, SECTION 7209 FOR ANY PERSON, UNLESS HE IS ACTING UNDER THE DIRECTION OF A LICENSED PROFESSIONAL ENGINEER OR LAND SURVEYOR, TO ALTER AN ITEM IN ANY WAY. IF AN ITEM BEARING THE SEAL OF AN ENGINEER OR LAND SURVEYOR IS ALTERED, THE ALTERING ENGINEER OR LAND SURVEYOR SHALL AFFIX TO THE ITEM HIS SEAL AND NOTATION "ALTERED BY" FOLLOWED BY HIS SIGNATURE AND THE DATE OF SUCH ALTERATION, AND SPECIFIC DESCRIPTION OF THE ALTERATION.

FOR TOWN USE

No.	REVISION	DATE

OWNER
I.H.C.C., INC. AND
ROBERG REVOCABLE TRUST
21 BREEZE HILL ROAD
NORTHPORT, NY, 11768
(631) 261 - 5700

APPLICANT:
THE PRESERVE AT INDIAN HILLS
1 RABRO DRIVE, SUITE 100
HAUPPAUGE, N.Y. 11788
(631) 351 - 4000

EXISTING FEATURES DEMOLITION PLAN
FOR
THE PRESERVE AT INDIAN HILLS
SITUATED AT
NORTHPORT
TOWN OF HUNTINGTON, SUFFOLK COUNTY, NEW YORK
S.C.T.M.: DISTRICT: 0400, SECT. 014, BLK. 04, LOTS 1 AND 2
DISTRICT 0400, SECT. 015, BLK. 01, LOTS 3.1, 3.2, 11, 12, 16, 19 AND P/O 22

THOMAS CHARLES DIXON 080910

NELSON + POPE
engineers • architects • surveyors
70 Maxess Road, Melville, NY 11747 • 631.427.5665 • nelsonpope.com

DRAWN BY: GEO	CADD No. 86047 CSP 2021.DWG	SCALE:	DRAWING NO.:	C - 101
CHECKED BY: JM	FILE NO.: 400-014	1"=150'		
DATE: OCTOBER, 2021	PROJECT NO.: **86047**		SHEET NO.:	**2** OF **44**

G:\projects\86047\FINALS\CONDOMINIUM\86047 CSP 2021.dwg, 2 OF 44 EXISTING FEATURES DEMOLITION PLAN, 10/11/2021 2:17:01 PM

LAND NOW OR FORMERLY OF
INDIAN HILLS ESTATES
(S.C.T.M. 400-14-1-11)
ZONE: R-40 RES
MYSTIC LANE
MEET EXISTING CURB
86.14'
COASTAL EROSION HAZARD LINE
FLAGGED BY N.P.AND V DATED 8-29-2018
N50° 20' 53"W 237.91'
S78° 57' 24"W 106.10'
S11° 02' 36"E 183.52'
S78° 57' 24"W
35.43'
S11° 02' 36"E 126.69'
N31° 13' 13"W
54.16'
N29° 14' 23"E 177.61'
N85° 42' 08"E 196.06'
N69° 02' 03"E 107.02'
S88° 40' 40"E 170.03'
N1° 19' 20"E
33.79'
N1°19'20"E 500.40'
574.85'
155.76'
344.64'
H. O .A LOT 1
LOOKOUT RIDGE
LOT 1
THE PRESERVE
AT INDIAN HILLS
CONDOMINIUM 1
(24 UNITS)
5.77 AC
1
2
3
4
5
6
7
8
9
10
11
12
13
14
15
16
17
18
19
20
21
22
23
24
LAND NOW OR FORMERLY OF
HENRY
(S.C.T.M. 400-14-3-3)
ZONE: R-40 RES
LAND NOW OR FORMERLY OF
MAZZONI
(S.C.T.M. 400-14-3-4)
ZONE: R-40 RES
LAND NOW OR FORMERLY OF
KNOPP
(S.C.T.M. 400-14-3-5)
ZONE: R-40 RES
LAND NOW OR FORMERLY OF
JACOBS
(S.C.T.M. 400-14-3-6)
ZONE: R-40 RES
100' SETBACK FROM WETLANDS LINE
WETLANDS LINE
LOT 3
GOLF ASSOCIATION 1
(EXISTING GOLF COURSE)
115.72 AC
N
W
E
S
LAND NOW OR FORMERLY OF
INDIAN HEAD BLUFF LLC
(S.C.T.M. 400-14-6-36)
ZONE: R-40 RES
LAND NOW OR FORMERLY OF
INDIAN HEAD BLUFF LLC
(S.C.T.M. 400-14-6-37)
ZONE: R-40 RES
COUSINS STREET
LAND NOW OR FORMERLY OF
ZACHER
(S.C.T.M. 400-14-4-3)
ZONE: R-40 RES
LAND NOW OR FORMERLY OF
ZACHER
(S.C.T.M. 400-14-4-10)
ZONE: R-40 RES
LAND NOW OR FORMERLY OF
C & R HOMES, INC
(S.C.T.M. 400-14-4-4.2)
ZONE: R-40 RES
THORNTON DRIVE
LAND NOW OR FORMERLY OF
AUGUSTINE
(S.C.T.M. 400-14-4-4.1)
ZONE: R-40 RES
LAND NOW OR FORMERLY OF
GUAN
(S.C.T.M. 400-14-4-5)
ZONE: R-40 RES
THORNTON DRIVE
CLAYMORE ROAD

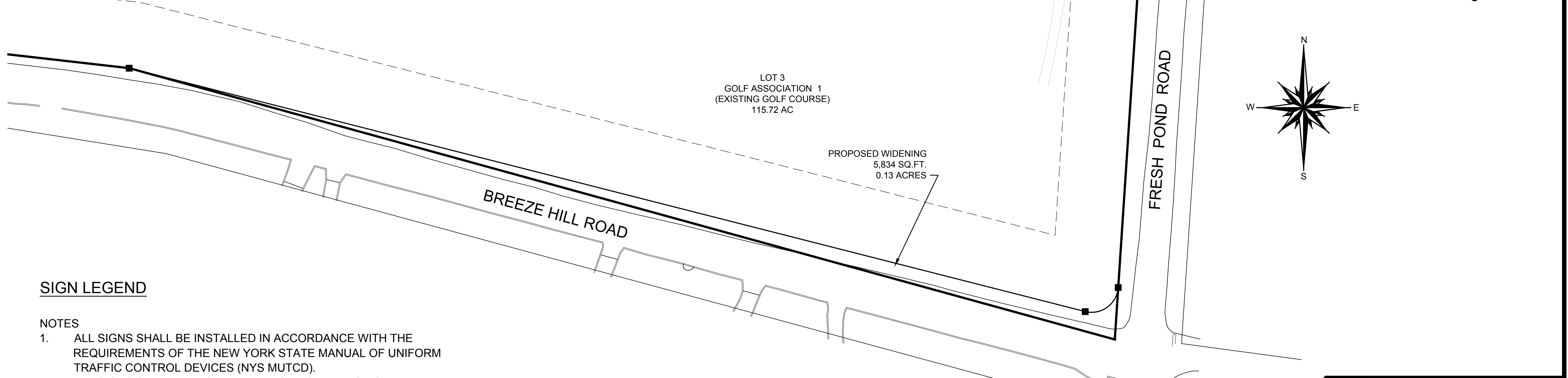
LOT 3
GOLF ASSOCIATION 1
(EXISTING GOLF COURSE)
115.72 AC
PROPOSED WIDENING
5,834 SQ.FT.
0.13 ACRES
BREEZE HILL ROAD
FRESH POND ROAD
N
W
E
S

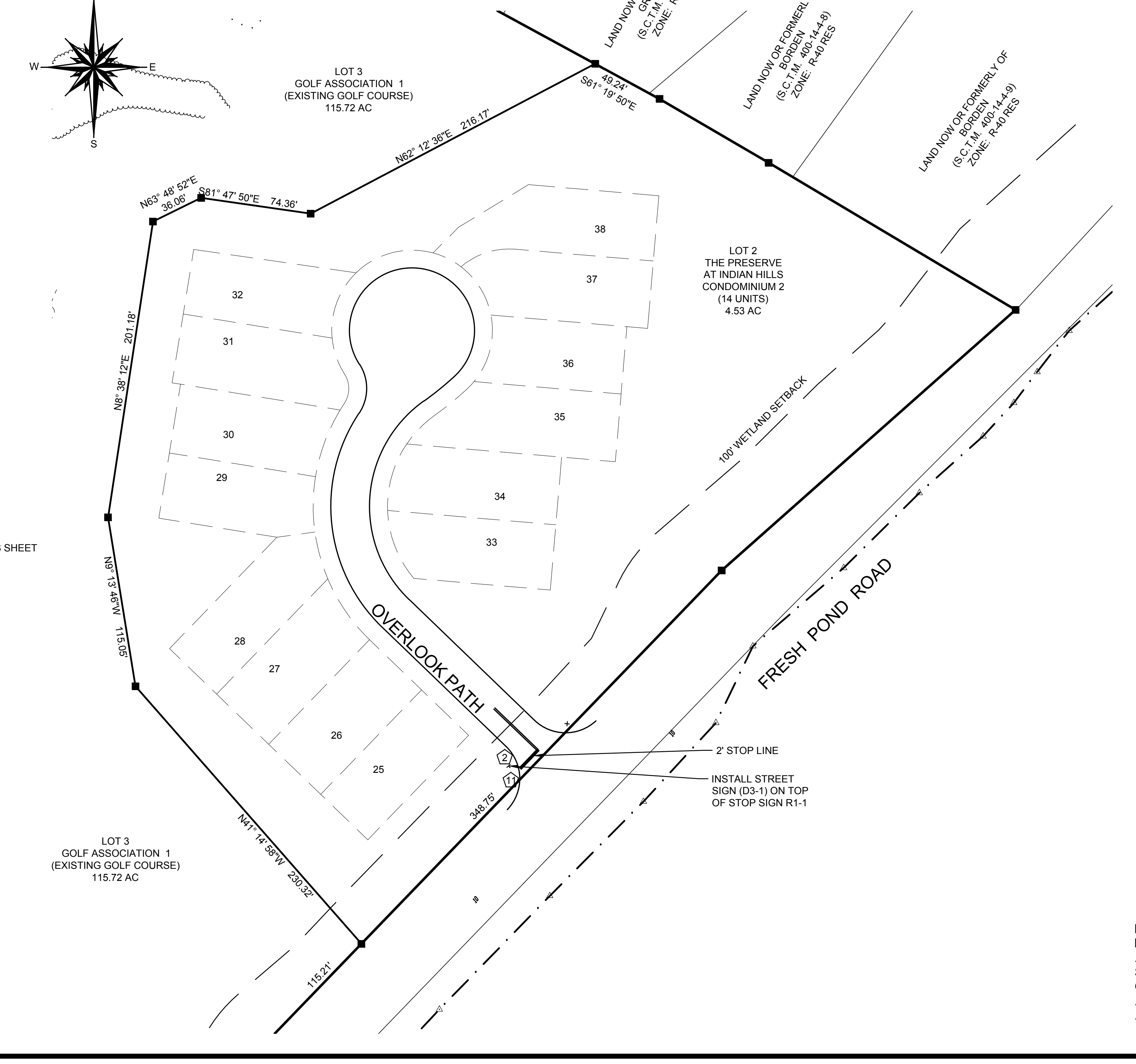
N
W
E
S
LOT 3
GOLF ASSOCIATION 1
(EXISTING GOLF COURSE)
115.72 AC
LAND NOW OR FORMERLY OF
GRAZIANO
(S.C.T.M. 400-14-4-7)
ZONE: R-40 RES
LAND NOW OR FORMERLY OF
BORDEN
(S.C.T.M. 400-14-4-8)
ZONE: R-40 RES
LAND NOW OR FORMERLY OF
BORDEN
(S.C.T.M. 400-14-4-9)
ZONE: R-40 RES
49.24'
S61° 19' 50"E
N62° 12' 36"E 216.17'
N63° 48' 52"E
36.06'
S81° 47' 50"E 74.36'
N8° 38' 12"E 201.18'
N9° 13' 46"W 115.05'
N41° 14' 58"W 230.32'
348.75'
115.21'
LOT 2
THE PRESERVE
AT INDIAN HILLS
CONDOMINIUM 2
(14 UNITS)
4.53 AC
25
26
27
28
29
30
31
32
33
34
35
36
37
38
OVERLOOK PATH
100' WETLAND SETBACK
FRESH POND ROAD
2
11
2' STOP LINE
INSTALL STREET
SIGN (D3-1) ON TOP
OF STOP SIGN R1-1
LOT 3
GOLF ASSOCIATION 1
(EXISTING GOLF COURSE)
115.72 AC

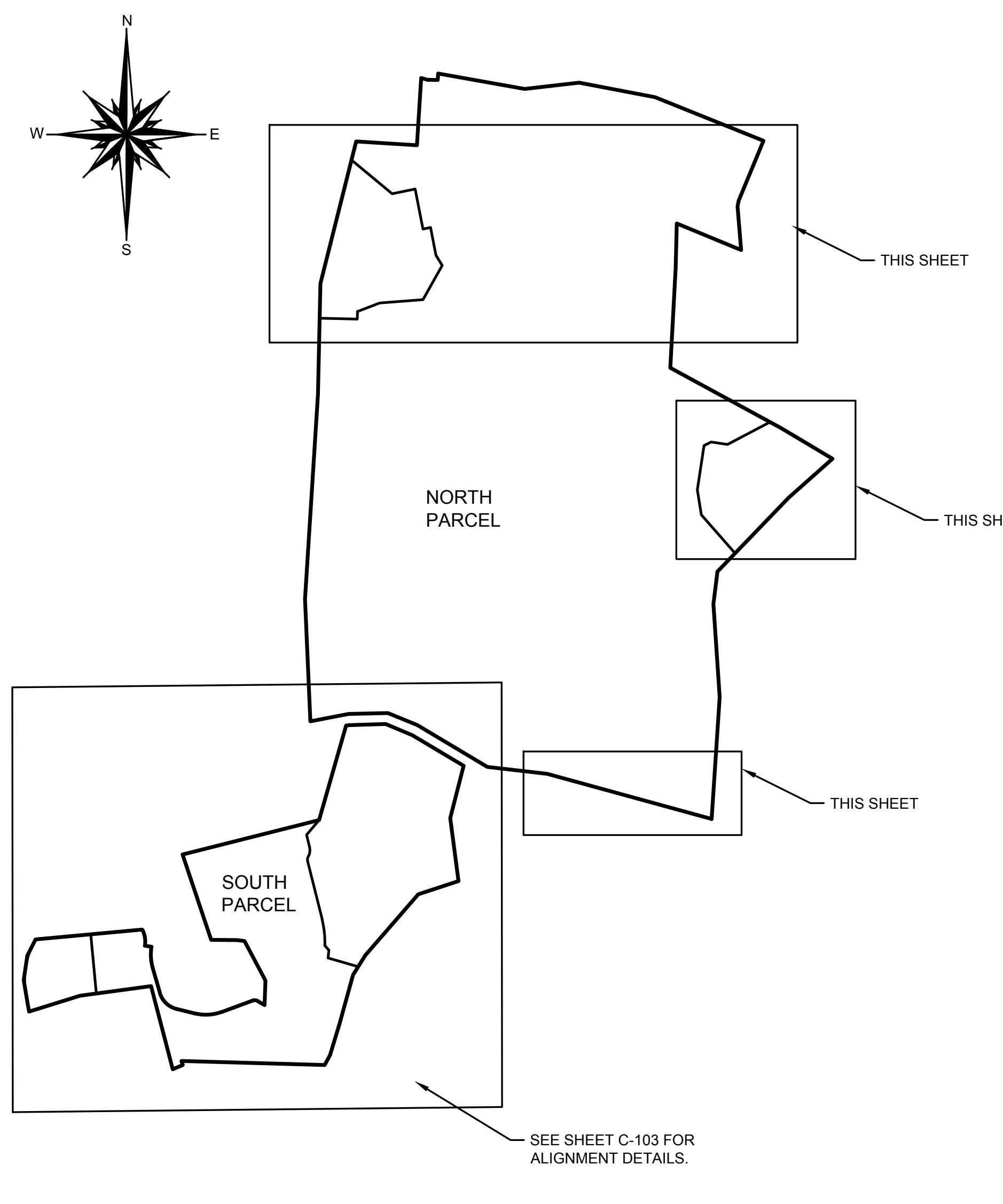
N
W
E
S
THIS SHEET
THIS SHEET
THIS SHEET
NORTH PARCEL
SOUTH PARCEL
SEE SHEET C-103 FOR ALIGNMENT DETAILS.

SIGN LEGEND

NOTES
1. ALL SIGNS SHALL BE INSTALLED IN ACCORDANCE WITH THE REQUIREMENTS OF THE NEW YORK STATE MANUAL OF UNIFORM TRAFFIC CONTROL DEVICES (NYS MUTCD).
2. ALL SIGNS SHALL BE INSTALLED PRIOR TO RELEASE OF THE PERFORMANCE BOND FOR EACH APPLICABLE SECTION.
3. ALL SIGNS TO BE INSTALLED ON PUBLIC OR COMMON PROPERTY

┬ DENOTES WARNING OR REGULATORY SIGN
+ DENOTES STREET NAME SIGN ASSEMBLY

SIGN	NYS MUTCD	SIZE	SYMBOL
STOP	R1-1	30" x 30"	2
DO NOT ENTER EMERGENCY ACCESS ONLY	R5-1	30" x 30"	9
← DEAD END	W14-1a L	24" x 30"	11

FOR TOWN USE

No.	REVISION	DATE

OWNER
I.H.C.C., INC. AND
ROBERG REVOCABLE TRUST
21 BREEZE HILL ROAD
NORTHPORT, NY, 11768
(631) 261 - 5700

APPLICANT:
THE PRESERVE AT INDIAN HILLS
1 RABRO DRIVE, SUITE 100
HAUPPAUGE, N.Y. 11788
(631) 351 - 4000

ALIGNMENT PLAN - NORTH PARCEL
FOR
THE PRESERVE AT INDIAN HILLS
SITUATED AT
NORTHPORT
TOWN OF HUNTINGTON, SUFFOLK COUNTY, NEW YORK
S.C.T.M.: DISTRICT: 0400, SECT. 014, BLK. 04, LOTS 1 AND 2
DISTRICT 0400, SECT. 015, BLK. 01, LOTS 3.1, 3.2, 11, 12, 16, 19 AND P/O 22

THOMAS CHARLES DIXON

NELSON + POPE
engineers • architects • surveyors
70 Maxess Road, Melville, NY 11747 • 631.427.5665 • nelsonpope.com

DRAWN BY: GEO	CADD No.: 86047 CSP 2021.DWG	SCALE:	DRAWING NO.:
CHECKED BY: JM	FILE NO.: 400-014	1"=60'	C - 102
DATE: OCTOBER, 2021	PROJECT NO.: 86047		SHEET NO.: 3 OF 44

IT IS A VIOLATION OF NEW YORK STATE EDUCATION LAW ARTICLE 145, PROFESSIONAL ENGINEERING AND LAND SURVEYING, SECTION 7209 FOR ANY PERSON, UNLESS HE IS ACTING UNDER THE DIRECTION OF A LICENSED PROFESSIONAL ENGINEER OR LAND SURVEYOR, TO ALTER AN ITEM IN ANY WAY. IF AN ITEM BEARING THE SEAL OF AN ENGINEER OR LAND SURVEYOR IS ALTERED, THE ALTERING ENGINEER OR LAND SURVEYOR SHALL AFFIX TO THE ITEM HIS SEAL AND NOTATION "ALTERED BY" FOLLOWED BY HIS SIGNATURE AND THE DATE OF SUCH ALTERATION, AND SPECIFIC DESCRIPTION OF THE ALTERATION.

SCALE: 1" = 60'
0 30 60 100 200

IT IS A VIOLATION OF NEW YORK STATE EDUCATION LAW ARTICLE 145, PROFESSIONAL ENGINEERING AND LAND SURVEYING, SECTION 7209 FOR ANY PERSON, UNLESS HE IS ACTING UNDER THE DIRECTION OF A LICENSED PROFESSIONAL ENGINEER OR LAND SURVEYOR, TO ALTER AN ITEM IN ANY WAY. IF AN ITEM BEARING THE SEAL OF AN ENGINEER OR LAND SURVEYOR IS ALTERED, THE ALTERING ENGINEER OR LAND SURVEYOR SHALL AFFIX TO THE ITEM HIS SEAL AND NOTATION "ALTERED BY" FOLLOWED BY HIS SIGNATURE AND THE DATE OF SUCH ALTERATION, AND SPECIFIC DESCRIPTION OF THE ALTERATION.

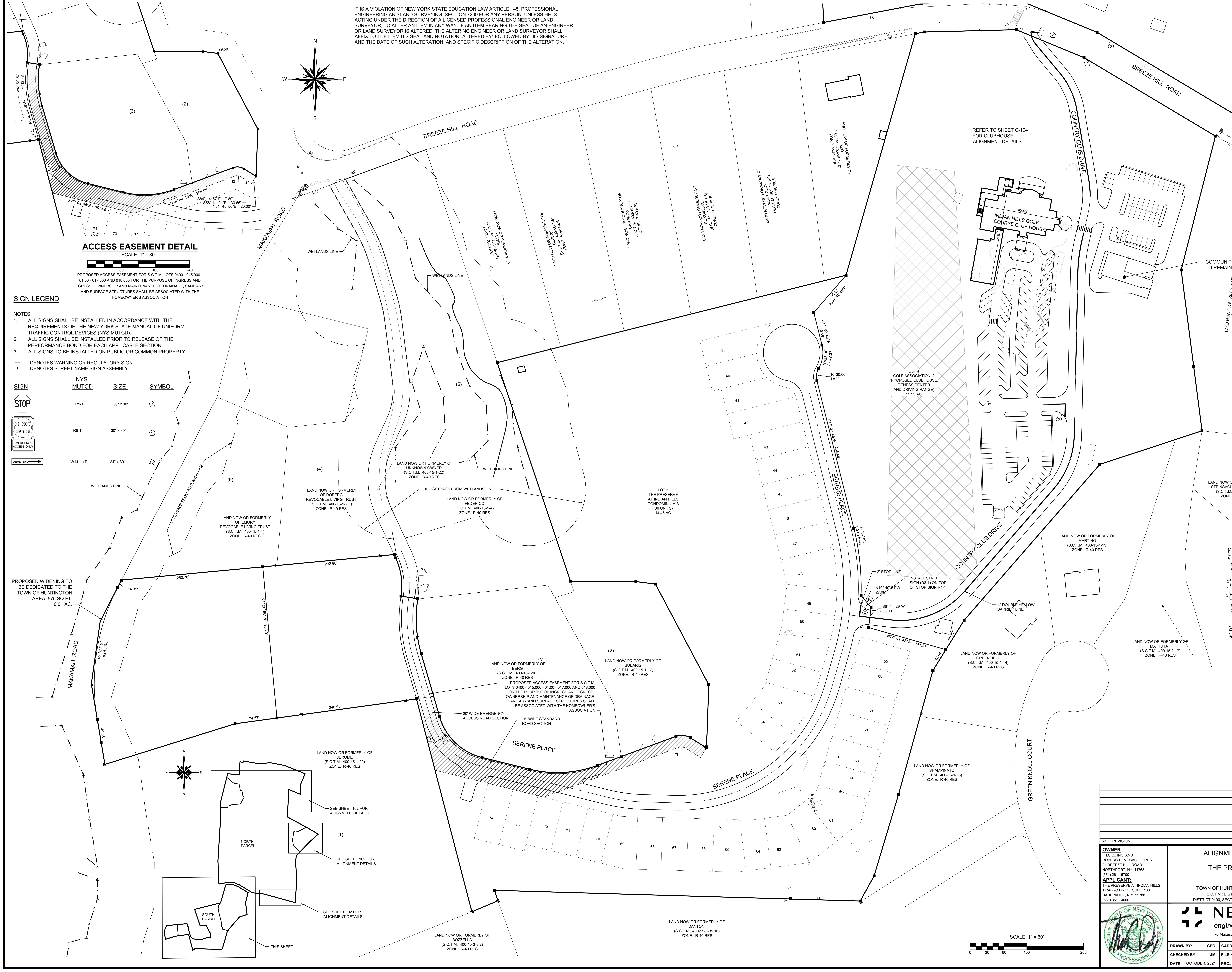
29.50
(3)
(2)
R=250.58'
L=112.45'
N16° 19' 30"W
73.17'
129.99'
S76° 03' 15"E 197.95'
N69° 44' 10"E 256.05'
S84° 14' 57"E 7.89'
S58° 14' 04"E 33.66'
N31° 45' 56"E 20.00'
MAKAMAH ROAD
N
S
W
E
BREEZE HILL ROAD
WETLANDS LINE
REFER TO SHEET C-104
FOR CLUBHOUSE
ALIGNMENT DETAILS
COUNTRY CLUB DRIVE
BREEZE HILL ROAD
145.62'
INDIAN HILLS GOLF
COURSE CLUB HOUSE
COMMUNITY GOLF PRO SHOP
TO REMAIN
86.97'
N40° 49' 42"E
N14° 03' 45"W
59.19'
R=55.00'
L=42.37'
R=30.00'
L=23.11'
LOT 4
GOLF ASSOCIATION 2
(PROPOSED CLUBHOUSE,
FITNESS CENTER
AND DRIVING RANGE)
11.95 AC
N14° 03' 45"W 268.46'
SERENE PLACE
R=430.00'
L=119.78'
(5)
(4)
(6)
LAND NOW OR FORMERLY OF
UNKNOWN OWNER
(S.C.T.M. 400-15-1-22)
ZONE: R-40 RES
LAND NOW OR FORMERLY
OF ROBERG
REVOCABLE LIVING TRUST
(S.C.T.M. 400-15-1-2.1)
ZONE: R-40 RES
100' SETBACK FROM WETLANDS LINE
LAND NOW OR FORMERLY OF
FEDERICO
(S.C.T.M. 400-15-1-4)
ZONE: R-40 RES
LOT 5
THE PRESERVE
AT INDIAN HILLS
CONDOMINIUM 3
(36 UNITS)
14.46 AC
LAND NOW OR FORMERLY
OF EMORY
REVOCABLE LIVING TRUST
(S.C.T.M. 400-15-1-1)
ZONE: R-40 RES
100' SETBACK FROM WETLANDS LINE
LAND NOW OR FORMERLY OF
STEINSVOLD (REV. TRUST)
(S.C.T.M. 400-15-2-16)
ZONE: R-40 RES
LAND NOW OR FORMERLY OF
MARTINO
(S.C.T.M. 400-15-1-13)
ZONE: R-40 RES
COUNTRY CLUB DRIVE
2' STOP LINE
INSTALL STREET
SIGN (D3-1) ON TOP
OF STOP SIGN R1-1
N40° 40' 51"W
27.06'
S6° 44' 29"W
36.00'
4" DOUBLE YELLOW
BARRIER LINE
N74° 01' 48"W 141.81'
60.82'
43.64'
LAND NOW OR FORMERLY OF
GREENFIELD
(S.C.T.M. 400-15-1-14)
ZONE: R-40 RES
LAND NOW OR FORMERLY OF
MATTUTAT
(S.C.T.M. 400-15-2-17)
ZONE: R-40 RES
PROPOSED WIDENING TO
BE DEDICATED TO THE
TOWN OF HUNTINGTON
AREA: 575 SQ.FT.
0.01 AC.
250.78'
14.39'
232.90'
N5° 20' 55"W 268.01'
R=375.00'
L=240.00'
40.58'
74.57'
248.65'
MAKAMAH ROAD
LAND NOW OR FORMERLY OF
BERG
(S.C.T.M. 400-15-1-18)
ZONE: R-40 RES
PROPOSED ACCESS EASEMENT FOR S.C.T.M.
LOTS 0400 - 015.000 - 01.00 - 017.000 AND 018.000
FOR THE PURPOSE OF INGRESS AND EGRESS .
OWNERSHIP AND MAINTENANCE OF DRAINAGE,
SANITARY AND SURFACE STRUCTURES SHALL
BE ASSOCIATED WITH THE HOMEOWNER'S
ASSOCIATION
LAND NOW OR FORMERLY OF
BUBARIS
(S.C.T.M. 400-15-1-17)
ZONE: R-40 RES
20' WIDE EMERGENCY
ACCESS ROAD SECTION
26' WIDE STANDARD
ROAD SECTION
SERENE PLACE
SERENE PLACE
GREEN KNOLL COURT
LAND NOW OR FORMERLY OF
SHAMPINATO
(S.C.T.M. 400-15-1-15)
ZONE: R-40 RES
LAND NOW OR FORMERLY OF
JEROME
(S.C.T.M. 400-15-1-20)
ZONE: R-40 RES
SEE SHEET 102 FOR
ALIGNMENT DETAILS
(1)
NORTH
PARCEL
SEE SHEET 102 FOR
ALIGNMENT DETAILS
SOUTH
PARCEL
SEE SHEET 102 FOR
ALIGNMENT DETAILS
THIS SHEET
LAND NOW OR FORMERLY OF
BOZZELLA
(S.C.T.M. 400-15-3-8.2)
ZONE: R-40 RES
LAND NOW OR FORMERLY OF
DANTONI
(S.C.T.M. 400-15-3-31.16)
ZONE: R-40 RES
39
40
41
42
43
44
45
46
47
48
49
50
51
52
53
54
55
56
57
58
59
60
61
62
63
64
65
66
67
68
69
70
71
72
73
74
SCALE: 1" = 60'
0
30
60
100
200

ACCESS EASEMENT DETAIL

SCALE: 1" = 80'

0 80 160 240

PROPOSED ACCESS EASEMENT FOR S.C.T.M. LOTS 0400 - 015.000 - 01.00 - 017.000 AND 018.000 FOR THE PURPOSE OF INGRESS AND EGRESS . OWNERSHIP AND MAINTENANCE OF DRAINAGE, SANITARY AND SURFACE STRUCTURES SHALL BE ASSOCIATED WITH THE HOMEOWNER'S ASSOCIATION

SIGN LEGEND

NOTES

1. ALL SIGNS SHALL BE INSTALLED IN ACCORDANCE WITH THE REQUIREMENTS OF THE NEW YORK STATE MANUAL OF UNIFORM TRAFFIC CONTROL DEVICES (NYS MUTCD).
2. ALL SIGNS SHALL BE INSTALLED PRIOR TO RELEASE OF THE PERFORMANCE BOND FOR EACH APPLICABLE SECTION.
3. ALL SIGNS TO BE INSTALLED ON PUBLIC OR COMMON PROPERTY

┬	DENOTES WARNING OR REGULATORY SIGN
+	DENOTES STREET NAME SIGN ASSEMBLY

SIGN	NYS MUTCD	SIZE	SYMBOL
STOP	R1-1	30" x 30"	2
DO NOT ENTER EMERGENCY ACCESS ONLY	R5-1	30" x 30"	9
DEAD END ➡	W14-1a R	24" x 30"	10

PAVEMENT MARKING LEGEND:

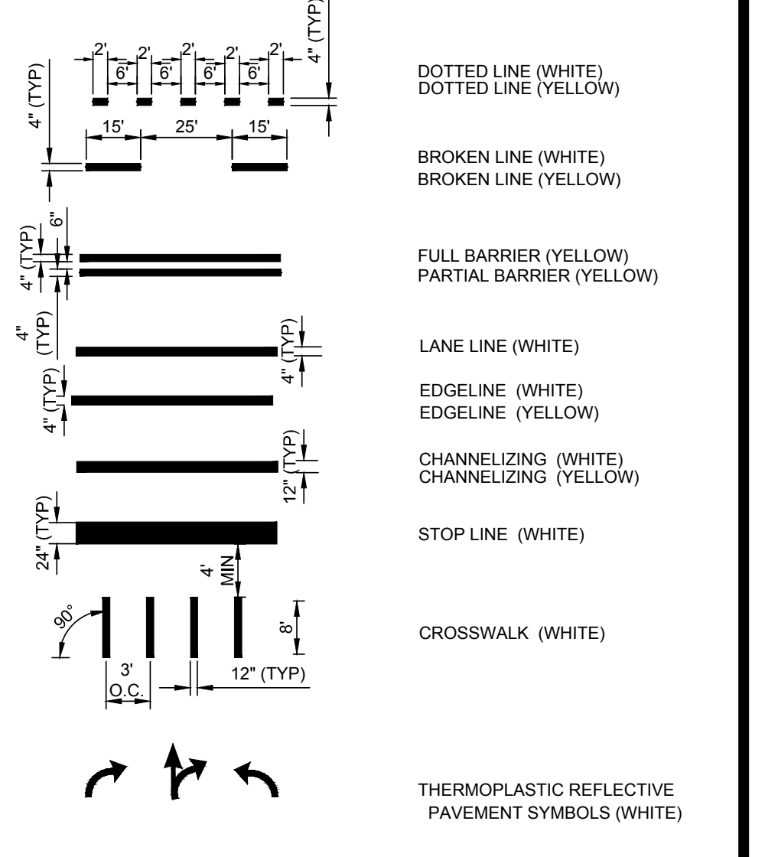
MARKING
2'
6'
4" (TYP)
15'
25'
15'
6"
4" (TYP)
12" (TYP)
24" (TYP)
4' MIN
8'
90°
3' O.C.
12" (TYP)

DESCRIPTION

DOTTED LINE (WHITE)
DOTTED LINE (YELLOW)

BROKEN LINE (WHITE)
BROKEN LINE (YELLOW)

FULL BARRIER (YELLOW)
PARTIAL BARRIER (YELLOW)

LANE LINE (WHITE)

EDGELINE (WHITE)
EDGELINE (YELLOW)

CHANNELIZING (WHITE)
CHANNELIZING (YELLOW)

STOP LINE (WHITE)

CROSSWALK (WHITE)

THERMOPLASTIC REFLECTIVE
PAVEMENT SYMBOLS (WHITE)

FOR TOWN USE

No.	REVISION	DATE

OWNER
I.H.C.C., INC. AND
ROBERG REVOCABLE TRUST
21 BREEZE HILL ROAD
NORTHPORT, NY, 11768
(631) 261 - 5700

APPLICANT:
THE PRESERVE AT INDIAN HILLS
1 RABRO DRIVE, SUITE 100
HAUPPAUGE, N.Y. 11788
(631) 351 - 4000

ALIGNMENT PLAN - SOUTH PARCEL
FOR
THE PRESERVE AT INDIAN HILLS
SITUATED AT
NORTHPORT
TOWN OF HUNTINGTON, SUFFOLK COUNTY, NEW YORK
S.C.T.M.: DISTRICT: 0400, SECT. 014, BLK. 04, LOTS 1 AND 2
DISTRICT 0400, SECT. 015, BLK. 01, LOTS 3.1, 3.2, 11, 12, 16, 19 AND P/O 22

THOMAS CHARLES DIXON
080915

NELSON + POPE
engineers • architects • surveyors
70 Maxess Road, Melville, NY 11747 • 631.427.5665 • nelsonpope.com

DRAWN BY: GEO	CADD No.: 86047 CSP 2021.DWG	SCALE: 1"=60'	DRAWING NO.: C - 103
CHECKED BY: JM	FILE NO.: 400-014		
DATE: OCTOBER, 2021	PROJECT NO.: 86047		SHEET NO.: 4 OF 44

G:\projects\86047\FINALS\CONDOMINIUM\86047 CSP 2021.dwg, 4 OF 44 ALIGNMENT PLAN - SOUTH PARCEL, 10/11/2021 2:20:43 PM

BREEZE HILL ROAD
BW=76.52
TW=80.83
BW=78.42
TW=79.89
PROPOSED SEGMENTAL RETAINING WALL
COMMUNITY GOLF PRO SHOP TO REMAIN
LOT 4
GOLF ASSOCIATION 2
(PROPOSED CLUBHOUSE,
FITNESS CENTER
AND DRIVING RANGE)
11.95 AC
PROVIDE DROP CURB
4" DOUBLE YELLOW BARRIER LINE
COUNTRY CLUB DRIVE
2' STOP LINE
PROP. STREET SIGN (D3-1)
MEET EXISTING CURB
2' STOP LINE
MEET EXISTING CURB
PATIO
INDIAN HILLS GOLF COURSE CLUB HOUSE
145.62'
188.63'
GOLF CART PARKING GARAGE
PATIO AREA
GOLF CART STAGING AREA
SEGMENTAL RETAINING WALL
CART PATH
ONE WAY
DUMPSTER ENCLOSURE
5' CONCRETE WALK
60.82'
141.81'
N
S
E
W
13
7
7
6
3
2
4
5
8
6
10
2
11
18
1
12

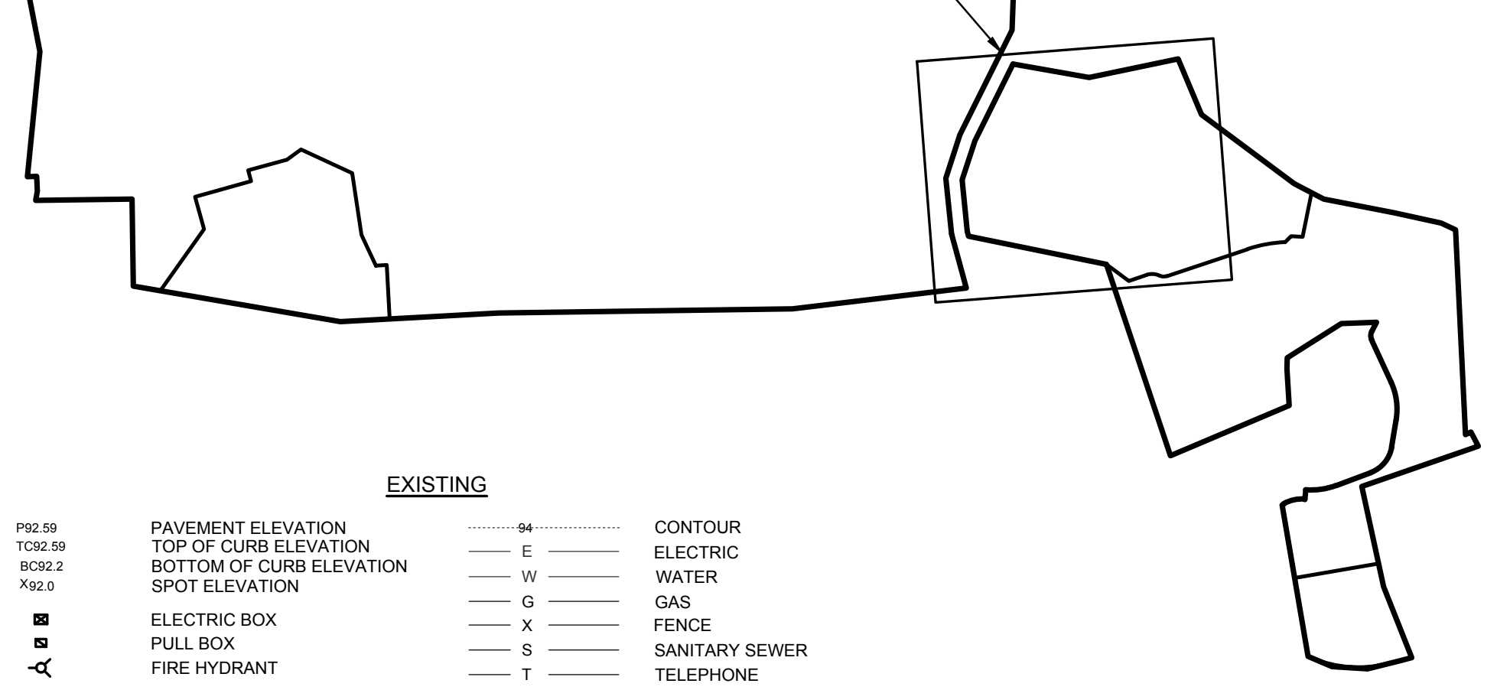

SIGN LEGEND

NOTES

1. ALL SIGNS SHALL BE INSTALLED IN ACCORDANCE WITH THE REQUIREMENTS OF THE NEW YORK STATE MANUAL OF UNIFORM TRAFFIC CONTROL DEVICES (NYS MUTCD).
2. ALL SIGNS SHALL BE INSTALLED PRIOR TO RELEASE OF THE PERFORMANCE BOND FOR EACH APPLICABLE SECTION.
3. ALL SIGNS TO BE INSTALLED ON PUBLIC OR COMMON PROPERTY

┬ DENOTES WARNING OR REGULATORY SIGN
+ DENOTES STREET NAME SIGN ASSEMBLY

SIGN	NYS MUTCD	SIZE	SYMBOL
ONE WAY	R6-1R	18" x 24"	1
STOP	R1-1	30" x 30"	2
DO NOT ENTER	R5-1	30" x 30"	3
HERE TO	R1-5L	24" x 24"	4
RESERVED PARKING VAN ACCESSIBLE	R7-8	12" x 18"	5
NO PARKING ANY TIME	R7-1	12" x 18"	6
NO STOPPING BETWEEN SIGNS	R7-14R	12" x 18"	7
NO STOPPING BETWEEN SIGNS	R7-14L	12" x 18"	8

SIGN	NYS MUTCD	SIZE	SYMBOL
	W11-2	W11-2	30" x 30"
			12
AHEAD	W 16-9P	W 16-9P	24" x 12"
	W11-2	30" x 30"	
			13
	W 16-7P	24" x 12"	

PARKING CALCULATION
GOLF COURSE CLUBHOUSE
REQUIRED:
DINNING AREA: 2,996 SQ.FT. x 1 / 50 SQ.FT. = 60 STALLS
GOLF COURSE: 18 HOLES x 3 / HOLE = 54 STALLS
DRIVING RANGE: 12 POSITIONS x 1 / 1 = 12 STALLS

COMMUNITY GOLF PRO SHOP
REQUIRED:
3,750 SQ.FT. x 1 / 200 SQ.FT. = 19 STALLS
TOTAL REQUIRED = 145 STALLS

TOTAL PROVIDED:
137 - 9' x 20' PAVED STALLS
6 - 9' x 20' PAVED HANDICAP ACCESSIBLE STALLS
2 - 9' x 20' LANDBANKED STALLS
145 TOTAL STALLS PROVIDED

PAVEMENT MARKING LEGEND:

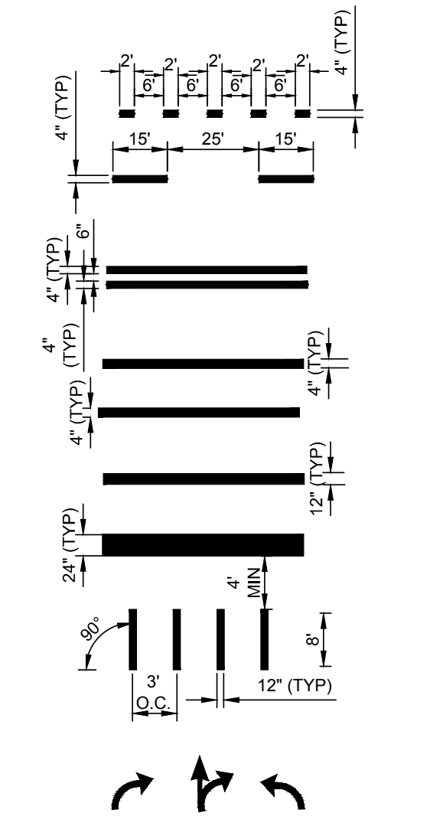
2'
6'
15'
25'
4" (TYP)
6"
12" (TYP)
24" (TYP)
4' MIN
8'
90°
3' O.C.

MARKING	DESCRIPTION
	DOTTED LINE (WHITE) DOTTED LINE (YELLOW)
	BROKEN LINE (WHITE) BROKEN LINE (YELLOW)
	FULL BARRIER (YELLOW) PARTIAL BARRIER (YELLOW)
	LANE LINE (WHITE)
	EDGELINE (WHITE) EDGELINE (YELLOW)
	CHANNELIZING (WHITE) CHANNELIZING (YELLOW)
	STOP LINE (WHITE)
	CROSSWALK (WHITE)
	THERMOPLASTIC REFLECTIVE PAVEMENT SYMBOLS (WHITE)

EXISTING

P92.59	PAVEMENT ELEVATION
TC92.59	TOP OF CURB ELEVATION
BC92.2	BOTTOM OF CURB ELEVATION
x92.0	SPOT ELEVATION
⊠	ELECTRIC BOX
⧄	PULL BOX
	FIRE HYDRANT
G	GAS VALVE
WV	WATER VALVE
T	TRANSFORMER
	ELECTRIC POLE
✲	LIGHT POLE
⊠	HIGH TENSION TOWER
W.M.	WATER MAIN
W.S.	WATER SERVICE
G.M.	GAS MAIN

94	CONTOUR
— E —	ELECTRIC
— W —	WATER
— G —	GAS
— X —	FENCE
— S —	SANITARY SEWER
— T —	TELEPHONE
— OHW —	OVERHEAD WIRE
— D —	DRAINAGE
— CATV —	TELEVISION
◎	DRAINAGE MANHOLE
▦	CATCH BASINS
□	MONUMENT

PROPOSED

(TC92.00)	TOP OF CURB ELEVATION
(BC91.5)	BOTTOM OF CURB ELEVATION
x(92.0)	SPOT ELEVATION
LP	LEACHING POOL
CB	CATCH BASIN
SMH	SANITARY MANHOLE
DMH	DRAINAGE MANHOLE
(93)	CONTOUR
⊜	LEACHING POOL W/ OPEN GRATE
⊙	LEACHING POOL W/ SOLID COVER
▣	DRAINAGE BASIN
■	CATCH BASIN (TC ~ TOP OF CURB BOX)
	HYDRANT
⊕ PS	STREET TREE W / SYMBOL
6	PAVED PARKING STALL COUNT
2	LANDBANKED PARKING STALL COUNT

— (W) —	WATER
— (FS) —	FIRE SERVICE
— (WS) —	WATER SERVICE
— (E) —	ELECTRIC
— (G) —	GAS
— X —	FENCE
— (HC) —	SANITARY HOUSE CONNECTION
— (D) —	DRAINAGE
— (RD) —	ROOF DRAIN
— (T) —	TELEPHONE
— (CATV) —	TELEVISION
— (PR) —	PICKET RAIL FENCE
░	CONCRETE WALK
/ — / — /	LIMIT OF CLEARING AND GRADING DURING CONSTRUCTION
▨	SAWCUT W/ PAVEMENT TO BE REMOVED
⊕	TEST HOLE
▬ ▬ ▬	DRAINAGE RIDGELINE
■	PROPOSED MONUMENT

FOR TOWN USE

No.	REVISION	DATE

OWNER
I.H.C.C., INC. AND
ROBERG REVOCABLE TRUST
21 BREEZE HILL ROAD
NORTHPORT, NY, 11768
(631) 261 - 5700

APPLICANT:
THE PRESERVE AT INDIAN HILLS
1 RABRO DRIVE, SUITE 100
HAUPPAUGE, N.Y. 11788
(631) 351 - 4000

THOMAS CHARLES DIXON

CLUBHOUSE ALIGNMENT PLAN
FOR
THE PRESERVE AT INDIAN HILLS
SITUATED AT
NORTHPORT
TOWN OF HUNTINGTON, SUFFOLK COUNTY, NEW YORK
S.C.T.M.: DISTRICT: 0400, SECT. 014, BLK. 04, LOTS 1 AND 2
DISTRICT 0400, SECT. 015, BLK. 01, LOTS 3.1, 3.2, 11, 12, 16, 19 AND P/O 22

NELSON + POPE
engineers • architects • surveyors
70 Maxess Road, Melville, NY 11747 • 631.427.5665 • nelsonpope.com

DRAWN BY: GEO	CADD No.: 86047 CSP 2021.DWG	SCALE: 1"=30'	DRAWING NO.: C - 104
CHECKED BY: JM	FILE NO.: 400-014		
DATE: OCTOBER, 2021	PROJECT NO.: 86047		SHEET NO.: 5 OF 44

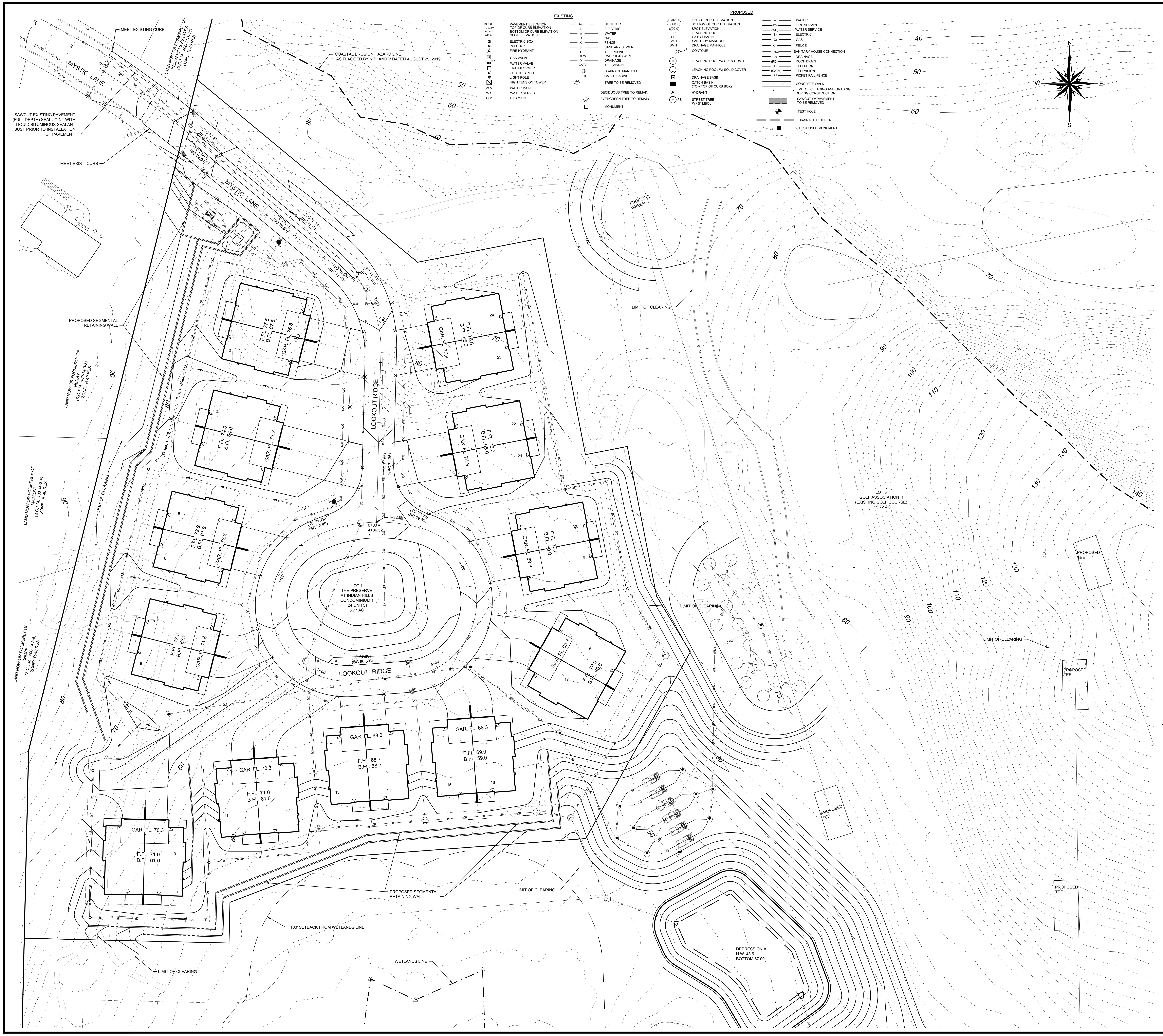
MEET EXISTING CURB
SAWCUT EXISTING PAVEMENT (FULL DEPTH) SEAL JOINT WITH LIQUID BITUMINOUS SEALANT JUST PRIOR TO INSTALLATION OF PAVEMENT.
MEET EXIST. CURB
MYSTIC LANE
MYSTIC LANE
LAND NOW OR FORMERLY OF INDIAN HILLS ESTATES (S.C.T.M. 400-14-1-11) ZONE: R-40 RES
COASTAL EROSION HAZARD LINE AS FLAGGED BY N.P. AND V DATED AUGUST 29, 2019
(TC 73.46) (BC 72.96)
(TC 73.48) (BC 72.98)
(TC 76.14) (BC 75.64)
(TC 76.13) (BC 75.63)
(TC 75.55) (BC 75.05)
(TC 75.53) (BC 75.03)
PROPOSED SEGMENTAL RETAINING WALL
LAND NOW OR FORMERLY OF HENRY (S.C.T.M. 400-14-3-3) ZONE: R-40 RES
LAND NOW OR FORMERLY OF MAZZONI (S.C.T.M. 400-14-3-4) ZONE: R-40 RES
LAND NOW OR FORMERLY OF KNOPP (S.C.T.M. 400-14-3-5) ZONE: R-40 RES
LIMIT OF CLEARING
LOOKOUT RIDGE
F.FL. 77.5 B.FL. 67.5 GAR. FL. 76.8
F.FL. 76.5 B.FL. 66.5 GAR. FL. 75.8
F.FL. 74.0 B.FL. 64.0 GAR. FL. 73.3
F.FL. 75.0 B.FL. 65.0 GAR. FL. 74.3
F.FL. 72.9 B.FL. 61.9 GAR. FL. 72.2
F.FL. 70.0 B.FL. 60.0 GAR. FL. 69.3
F.FL. 72.5 B.FL. 62.5 GAR. FL. 71.8
F.FL. 70.0 B.FL. 60.0 GAR. FL. 69.3
(TC 71.85) (BC 71.35)
(TC 71.49) (BC 70.99)
(TC 70.00) (BC 69.50)
0+00 = 4+86.52
4+82.68
LOT 1 THE PRESERVE AT INDIAN HILLS CONDOMINIUM 1 (24 UNITS) 5.77 AC
(TC 67.39) (BC 66.89)
LOOKOUT RIDGE
GAR. FL. 70.3 F.FL. 71.0 B.FL. 61.0
GAR. FL. 70.3 F.FL. 71.0 B.FL. 61.0
GAR. FL. 68.0 F.FL. 68.7 B.FL. 58.7
GAR. FL. 68.3 F.FL. 69.0 B.FL. 59.0
PROPOSED SEGMENTAL RETAINING WALL
LIMIT OF CLEARING
100' SETBACK FROM WETLANDS LINE
LIMIT OF CLEARING
WETLANDS LINE
DEPRESSION A H.W. 43.5 BOTTOM 37.00
PROPOSED GREEN
LIMIT OF CLEARING
LIMIT OF CLEARING
LIMIT OF CLEARING
LOT 3 GOLF ASSOCIATION 1 (EXISTING GOLF COURSE) 115.72 AC
PROPOSED TEE
PROPOSED TEE
PROPOSED TEE
PROPOSED TEE
PROPOSED TEE
N
S
E
W

EXISTING

P92.59	PAVEMENT ELEVATION	94	CONTOUR
TC92.59	TOP OF CURB ELEVATION	E	ELECTRIC
BC92.2	BOTTOM OF CURB ELEVATION	W	WATER
X92.0	SPOT ELEVATION	G	GAS
	ELECTRIC BOX	X	FENCE
	PULL BOX	S	SANITARY SEWER
	FIRE HYDRANT	T	TELEPHONE
	GAS VALVE	OHW	OVERHEAD WIRE
WV	WATER VALVE	D	DRAINAGE
	TRANSFORMER	CATV	TELEVISION
	ELECTRIC POLE	Ⓓ	DRAINAGE MANHOLE
	LIGHT POLE		CATCH BASINS
☒	HIGH TENSION TOWER		TREE TO BE REMOVED
W.M.	WATER MAIN		DECIDUOUS TREE TO REMAIN
W.S.	WATER SERVICE		EVERGREEN TREE TO REMAIN
G.M.	GAS MAIN	☐	MONUMENT

PROPOSED

(TC92.00)	TOP OF CURB ELEVATION	(W)	WATER
(BC91.5)	BOTTOM OF CURB ELEVATION	(FS)	FIRE SERVICE
x(92.0)	SPOT ELEVATION	(WS)	WATER SERVICE
LP	LEACHING POOL	(E)	ELECTRIC
CB	CATCH BASIN	(G)	GAS
SMH	SANITARY MANHOLE	X	FENCE
DMH	DRAINAGE MANHOLE	(HC)	SANITARY HOUSE CONNECTION
(93)	CONTOUR	(D)	DRAINAGE
	LEACHING POOL W/ OPEN GRATE	(RD)	ROOF DRAIN
	LEACHING POOL W/ SOLID COVER	(T)	TELEPHONE
	DRAINAGE BASIN	(CATV)	TELEVISION
■	CATCH BASIN (TC ~ TOP OF CURB BOX)	(PR)	PICKET RAIL FENCE
	HYDRANT		CONCRETE WALK
PS	STREET TREE W / SYMBOL	/ / /	LIMIT OF CLEARING AND GRADING DURING CONSTRUCTION
			SAWCUT W/ PAVEMENT TO BE REMOVED
			TEST HOLE
			DRAINAGE RIDGELINE
		■	PROPOSED MONUMENT

IT IS A VIOLATION OF NEW YORK STATE EDUCATION LAW ARTICLE 145, PROFESSIONAL ENGINEERING AND LAND SURVEYING, SECTION 7209 FOR ANY PERSON, UNLESS HE IS ACTING UNDER THE DIRECTION OF A LICENSED PROFESSIONAL ENGINEER OR LAND SURVEYOR, TO ALTER AN ITEM IN ANY WAY. IF AN ITEM BEARING THE SEAL OF AN ENGINEER OR LAND SURVEYOR IS ALTERED, THE ALTERING ENGINEER OR LAND SURVEYOR SHALL AFFIX TO THE ITEM HIS SEAL AND NOTATION "ALTERED BY" FOLLOWED BY HIS SIGNATURE AND THE DATE OF SUCH ALTERATION, AND SPECIFIC DESCRIPTION OF THE ALTERATION.

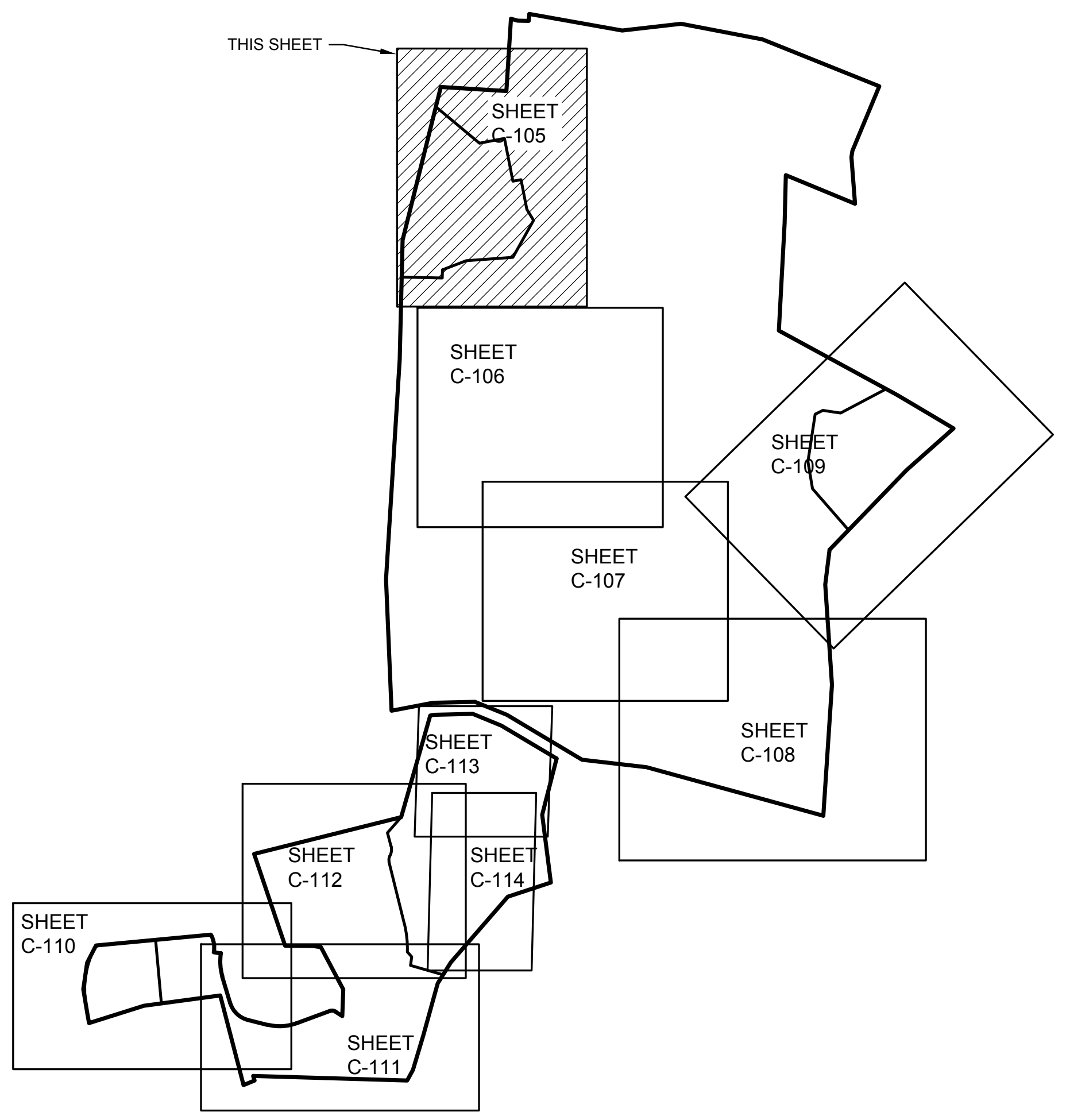
THIS SHEET
SHEET C-105
SHEET C-106
SHEET C-109
SHEET C-107
SHEET C-108
SHEET C-113
SHEET C-112
SHEET C-114
SHEET C-110
SHEET C-111

SCALE: 1" = 30'

0 30 60 100

FOR TOWN USE

No.	REVISION	DATE

OWNER
I.H.C.C., INC. AND
ROBERG REVOCABLE TRUST
21 BREEZE HILL ROAD
NORTHPORT, NY, 11768
(631) 261 - 5700

APPLICANT:
THE PRESERVE AT INDIAN HILLS
1 RABRO DRIVE, SUITE 100
HAUPPAUGE, N.Y. 11788
(631) 351 - 4000

THOMAS CHARLES DIXON

GRADING PLAN 1
FOR
THE PRESERVE AT INDIAN HILLS
SITUATED AT
NORTHPORT
TOWN OF HUNTINGTON, SUFFOLK COUNTY, NEW YORK
S.C.T.M.: DISTRICT: 0400, SECT. 014, BLK. 04, LOTS 1 AND 2
DISTRICT 0400, SECT. 015, BLK. 01, LOTS 3.1, 3.2, 11, 12, 16, 19 AND P/O 22

NELSON + POPE
engineers • architects • surveyors
70 Maxess Road, Melville, NY 11747 • 631.427.5665 • nelsonpope.com

DRAWN BY: GEO	CADD No. 86047 CSP 2021.DWG	SCALE:	DRAWING NO.:
CHECKED BY: JM	FILE NO.: 400-014	1"=30'	C - 105
DATE: OCTOBER, 2021	PROJECT NO.: 86047		SHEET NO.: 6 OF 44

G:\projects\86047\FINALS\CONDOMINIUM\86047 CSP 2021.dwg, 6 OF 44 GRADING PLAN 1, 10/11/2021 2:23:26 PM

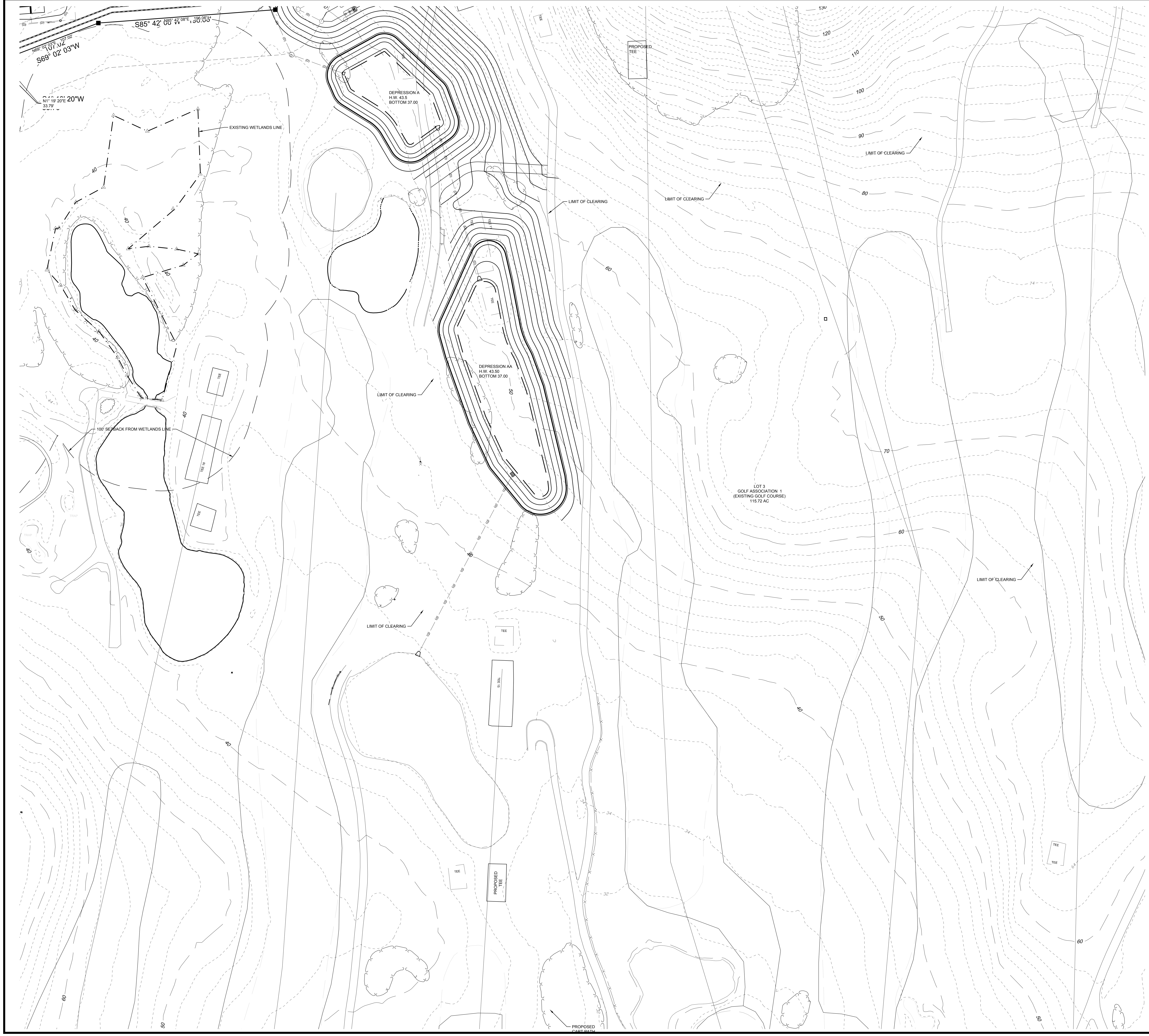
S85° 42' 08"W 196.06'
N85° 42' 08"E 196.06'
N69° 02' 03"E 107.02'
S69° 02' 03"W 107.02'
N1° 19' 20"E 33.79'
S1° 19' 20"W
EXISTING WETLANDS LINE
DEPRESSION A
H.W. 43.5
BOTTOM 37.00
DEPRESSION AA
H.W. 43.50
BOTTOM 37.00
PROPOSED TEE
LIMIT OF CLEARING
LIMIT OF CLEARING
LIMIT OF CLEARING
LIMIT OF CLEARING
LIMIT OF CLEARING
LIMIT OF CLEARING
100' SETBACK FROM WETLANDS LINE
TEE
TEE 16
TEE
TEE
TEE 15
TEE
TEE
TEE
PROPOSED TEE
PROPOSED CART PATH
LOT 3
GOLF ASSOCIATION 1
(EXISTING GOLF COURSE)
115.72 AC
130
120
110
100
90
80
70
60
50
40
74
34
32
60
50
60
40
40
40
40
40
40
50

IT IS A VIOLATION OF NEW YORK STATE EDUCATION LAW ARTICLE 145, PROFESSIONAL ENGINEERING AND LAND SURVEYING, SECTION 7209 FOR ANY PERSON, UNLESS HE IS ACTING UNDER THE DIRECTION OF A LICENSED PROFESSIONAL ENGINEER OR LAND SURVEYOR, TO ALTER AN ITEM IN ANY WAY. IF AN ITEM BEARING THE SEAL OF AN ENGINEER OR LAND SURVEYOR IS ALTERED, THE ALTERING ENGINEER OR LAND SURVEYOR SHALL AFFIX TO THE ITEM HIS SEAL AND NOTATION "ALTERED BY" FOLLOWED BY HIS SIGNATURE AND THE DATE OF SUCH ALTERATION, AND SPECIFIC DESCRIPTION OF THE ALTERATION.

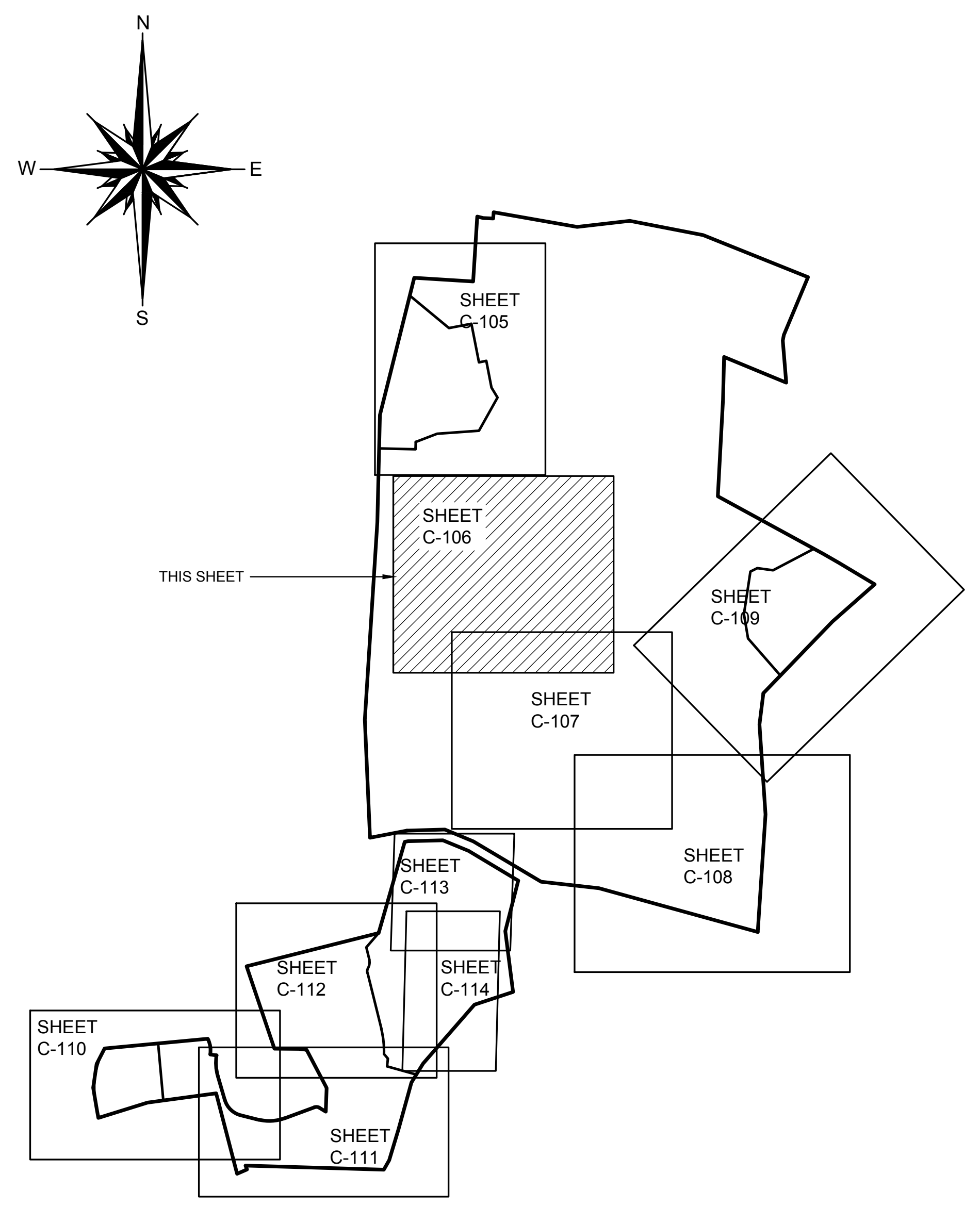
N
S
E
W
SHEET C-105
SHEET C-106
THIS SHEET
SHEET C-109
SHEET C-107
SHEET C-108
SHEET C-113
SHEET C-112
SHEET C-114
SHEET C-110
SHEET C-111

EXISTING

P92.59	PAVEMENT ELEVATION	94	CONTOUR
TC92.59	TOP OF CURB ELEVATION	E	ELECTRIC
BC92.2	BOTTOM OF CURB ELEVATION	W	WATER
X92.0	SPOT ELEVATION	G	GAS
⊠	ELECTRIC BOX	X	FENCE
⊠	PULL BOX	S	SANITARY SEWER
	FIRE HYDRANT	T	TELEPHONE
G	GAS VALVE	OHW	OVERHEAD WIRE
WV	WATER VALVE	D	DRAINAGE
T	TRANSFORMER	CATV	TELEVISION
	ELECTRIC POLE	◎	DRAINAGE MANHOLE
✡	LIGHT POLE	▦	CATCH BASINS
⊠	HIGH TENSION TOWER	✳	TREE TO BE REMOVED
W.M.	WATER MAIN		DECIDUOUS TREE TO REMAIN
W.S.	WATER SERVICE	✳	EVERGREEN TREE TO REMAIN
G.M.	GAS MAIN	□	MONUMENT

PROPOSED

(TC92.00)	TOP OF CURB ELEVATION	(W)	WATER
(BC91.5)	BOTTOM OF CURB ELEVATION	(FS)	FIRE SERVICE
x(92.0)	SPOT ELEVATION	(WS)	WATER SERVICE
LP	LEACHING POOL	(E)	ELECTRIC
CB	CATCH BASIN	(G)	GAS
SMH	SANITARY MANHOLE	X	FENCE
DMH	DRAINAGE MANHOLE	(HC)	SANITARY HOUSE CONNECTION
(93)	CONTOUR	(D)	DRAINAGE
◎	LEACHING POOL W/ OPEN GRATE	(RD)	ROOF DRAIN
○	LEACHING POOL W/ SOLID COVER	(T)	TELEPHONE
▣	DRAINAGE BASIN	(CATV)	TELEVISION
■	CATCH BASIN (TC ~ TOP OF CURB BOX)	▨	CONCRETE WALK
	HYDRANT	/ / /	LIMIT OF CLEARING AND GRADING DURING CONSTRUCTION
⊕ PS	STREET TREE W / SYMBOL	▨	SAWCUT W/ PAVEMENT TO BE REMOVED
		⊕	TEST HOLE
		▬ ▬ ▬	DRAINAGE RIDGELINE
		■	PROPOSED MONUMENT

SCALE: 1" = 40'

0 40 60 100

FOR TOWN USE

No.	REVISION	DATE

OWNER
I.H.C.C., INC. AND
ROBERG REVOCABLE TRUST
21 BREEZE HILL ROAD
NORTHPORT, NY, 11768
(631) 261 - 5700

APPLICANT:
THE PRESERVE AT INDIAN HILLS
1 RABRO DRIVE, SUITE 100
HAUPPAUGE, N.Y. 11788
(631) 351 - 4000

GRADING PLAN 2
FOR
THE PRESERVE AT INDIAN HILLS
SITUATED AT
NORTHPORT
TOWN OF HUNTINGTON, SUFFOLK COUNTY, NEW YORK
S.C.T.M.: DISTRICT: 0400, SECT. 014, BLK. 04, LOTS 1 AND 2
DISTRICT 0400, SECT. 015, BLK. 01, LOTS 3.1, 3.2, 11, 12, 16, 19 AND P/O 22

THOMAS CHARLES DIXON
080919

NELSON + POPE
engineers • architects • surveyors
70 Maxess Road, Melville, NY 11747 • 631.427.5665 • nelsonpope.com

DRAWN BY: GEO	CADD No.: 86047 CSP 2021.DWG	SCALE: 1"=40'	DRAWING NO.: C - 106
CHECKED BY: JM	FILE NO.: 400-014		
DATE: OCTOBER, 2021	PROJECT NO.: 86047		SHEET NO.: 7 OF 44

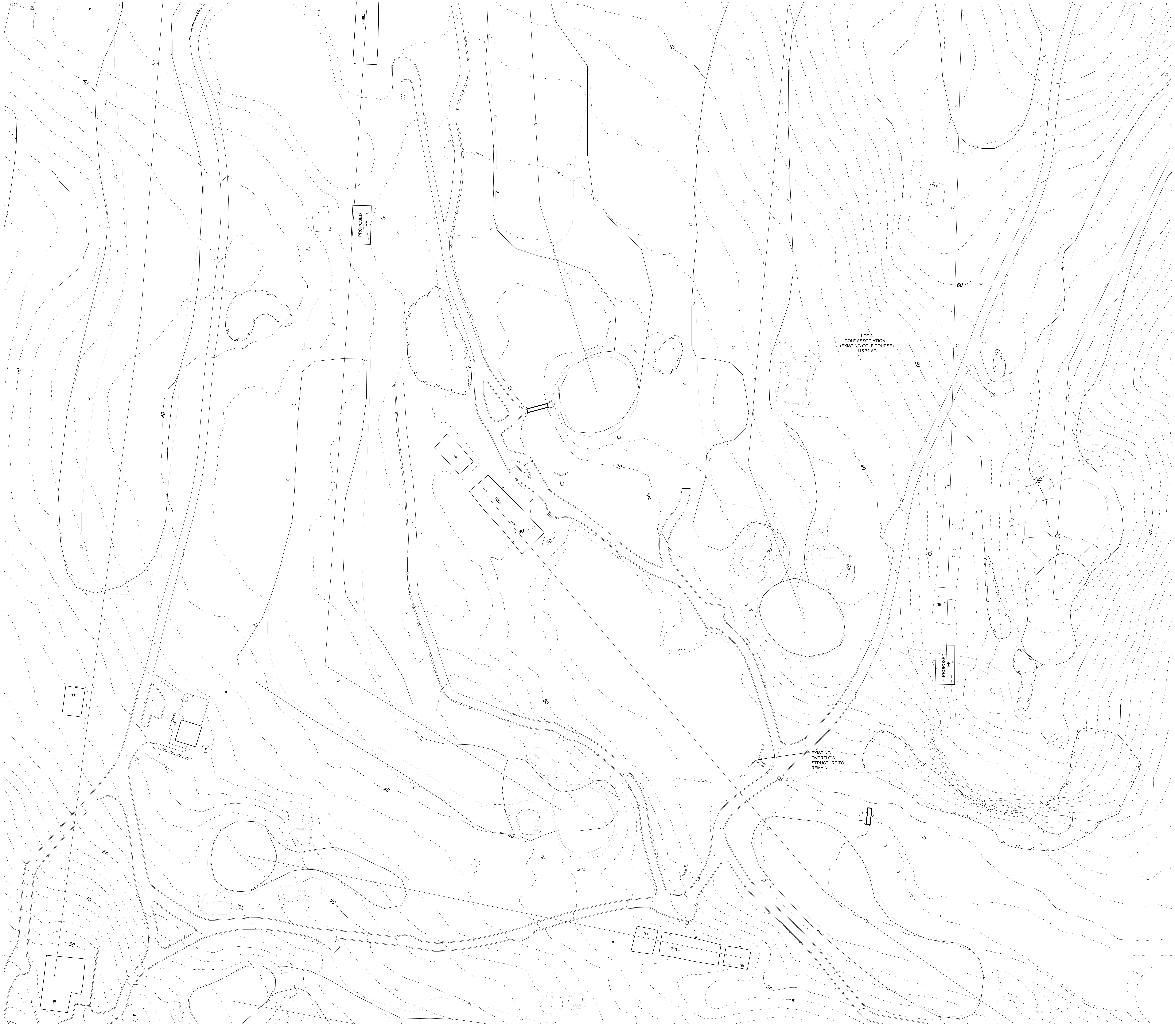
TEE 15
40
TEE
PROPOSED TEE
32
34
30
40
50
TEE
TEE 6
TEE
30
LOT 3
GOLF ASSOCIATION 1
(EXISTING GOLF COURSE)
115.72 AC
60
50
40
30
40
60
60
50
TEE
PROPOSED TEE
TEE 9
TEE
30
EXISTING OVERFLOW STRUCTURE TO REMAIN
40
40
60
70
80
50
TEE 10
TEE
TEE 16
TEE
30

IT IS A VIOLATION OF NEW YORK STATE EDUCATION LAW ARTICLE 145, PROFESSIONAL ENGINEERING AND LAND SURVEYING, SECTION 7209 FOR ANY PERSON, UNLESS HE IS ACTING UNDER THE DIRECTION OF A LICENSED PROFESSIONAL ENGINEER OR LAND SURVEYOR, TO ALTER AN ITEM IN ANY WAY. IF AN ITEM BEARING THE SEAL OF AN ENGINEER OR LAND SURVEYOR IS ALTERED, THE ALTERING ENGINEER OR LAND SURVEYOR SHALL AFFIX TO THE ITEM HIS SEAL AND NOTATION "ALTERED BY" FOLLOWED BY HIS SIGNATURE AND THE DATE OF SUCH ALTERATION, AND SPECIFIC DESCRIPTION OF THE ALTERATION.

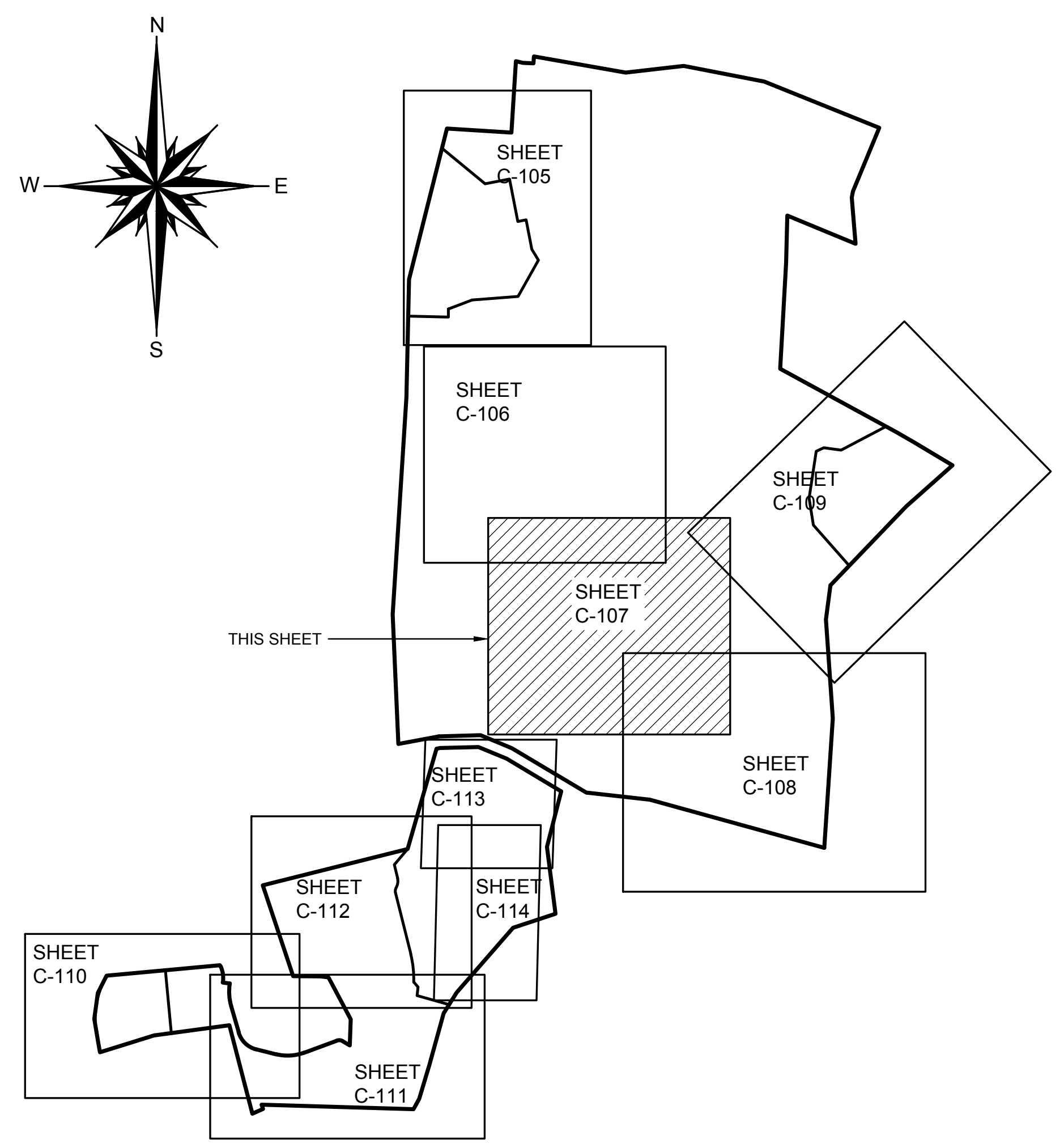
N
S
W
E
SHEET C-105
SHEET C-106
SHEET C-109
SHEET C-107
THIS SHEET
SHEET C-108
SHEET C-113
SHEET C-112
SHEET C-114
SHEET C-110
SHEET C-111

EXISTING

P92.59	PAVEMENT ELEVATION	----94----	CONTOUR
TC92.59	TOP OF CURB ELEVATION	—— E ——	ELECTRIC
BC92.2	BOTTOM OF CURB ELEVATION	—— W ——	WATER
X92.0	SPOT ELEVATION	—— G ——	GAS
⊠	ELECTRIC BOX	—— X ——	FENCE
⧅	PULL BOX	—— S ——	SANITARY SEWER
	FIRE HYDRANT	—— T ——	TELEPHONE
G	GAS VALVE	—— OHW ——	OVERHEAD WIRE
WV	WATER VALVE	—— D ——	DRAINAGE
T	TRANSFORMER	—— CATV ——	TELEVISION
	ELECTRIC POLE	◎	DRAINAGE MANHOLE
✲	LIGHT POLE	▦	CATCH BASINS
⊠	HIGH TENSION TOWER	✵	TREE TO BE REMOVED
W.M.	WATER MAIN		DECIDUOUS TREE TO REMAIN
W.S.	WATER SERVICE	✵	EVERGREEN TREE TO REMAIN
G.M.	GAS MAIN	□	MONUMENT

PROPOSED

(TC92.00)	TOP OF CURB ELEVATION	—— (W) ——	WATER
(BC91.5)	BOTTOM OF CURB ELEVATION	—— (FS) ——	FIRE SERVICE
x(92.0)	SPOT ELEVATION	—— (WS) ——	WATER SERVICE
LP	LEACHING POOL	—— (E) ——	ELECTRIC
CB	CATCH BASIN	—— (G) ——	GAS
SMH	SANITARY MANHOLE	—— X ——	FENCE
DMH	DRAINAGE MANHOLE	—— (HC) ——	SANITARY HOUSE CONNECTION
——(93)——	CONTOUR	—— (D) ——	DRAINAGE
⊜	LEACHING POOL W/ OPEN GRATE	—— (RD) ——	ROOF DRAIN
○	LEACHING POOL W/ SOLID COVER	—— (T) ——	TELEPHONE
▣	DRAINAGE BASIN	—— (CATV) ——	TELEVISION
■	CATCH BASIN (TC ~ TOP OF CURB BOX)	▨	CONCRETE WALK
	HYDRANT	/ —— / —— /	LIMIT OF CLEARING AND GRADING DURING CONSTRUCTION
⊕ PS	STREET TREE W / SYMBOL	▨	SAWCUT W/ PAVEMENT TO BE REMOVED
		⊕	TEST HOLE
		▬ ▬ ▬	DRAINAGE RIDGELINE
		■	PROPOSED MONUMENT

SCALE: 1" = 40'
0
40
60
100

FOR TOWN USE

No.	REVISION	DATE

OWNER
I.H.C.C., INC. AND
ROBERG REVOCABLE TRUST
21 BREEZE HILL ROAD
NORTHPORT, NY, 11768
(631) 261 - 5700

APPLICANT:
THE PRESERVE AT INDIAN HILLS
1 RABRO DRIVE, SUITE 100
HAUPPAUGE, N.Y. 11788
(631) 351 - 4000

GRADING PLAN 3
FOR
THE PRESERVE AT INDIAN HILLS
SITUATED AT
NORTHPORT
TOWN OF HUNTINGTON, SUFFOLK COUNTY, NEW YORK
S.C.T.M.: DISTRICT: 0400, SECT. 014, BLK. 04, LOTS 1 AND 2
DISTRICT 0400, SECT. 015, BLK. 01, LOTS 3.1, 3.2, 11, 12, 16, 19 AND P/O 22

THOMAS CHARLES DIXON
080919

NELSON + POPE
engineers • architects • surveyors
70 Maxess Road, Melville, NY 11747 • 631.427.5665 • nelsonpope.com

DRAWN BY: GEO	CADD No.: 86047 CSP 2021.DWG	SCALE: 1"=40'	DRAWING NO.: C - 107
CHECKED BY: JM	FILE NO.: 400-014		
DATE: OCTOBER, 2021	PROJECT NO.: 86047		SHEET NO.: 8 OF 44

G:\projects\86047\FINALS\CONDOMINIUM\86047 CSP 2021.dwg, 8 OF 44 GRADING PLAN 3, 10/11/2021 2:25:13 PM

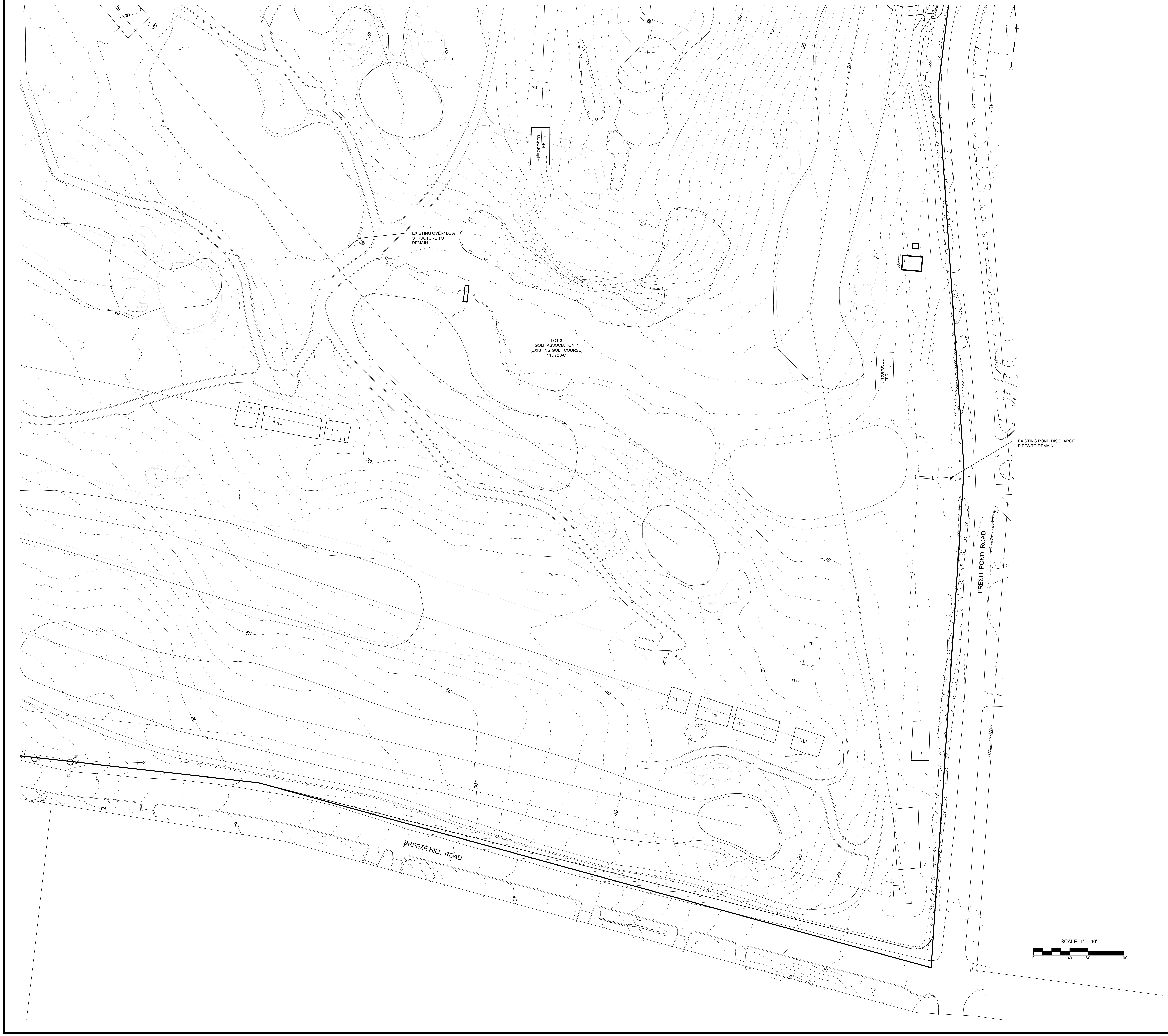
EXISTING OVERFLOW STRUCTURE TO REMAIN
LOT 3
GOLF ASSOCIATION 1
(EXISTING GOLF COURSE)
115.72 AC
EXISTING POND DISCHARGE PIPES TO REMAIN
FRESH POND ROAD
BREEZE HILL ROAD
PROPOSED TEE
TEE
TEE 16
TEE 9
TEE 2
TEE 5
10
20
30
40
50
60
SCALE: 1" = 40'
0
40
60
100

IT IS A VIOLATION OF NEW YORK STATE EDUCATION LAW ARTICLE 145, PROFESSIONAL ENGINEERING AND LAND SURVEYING, SECTION 7209 FOR ANY PERSON, UNLESS HE IS ACTING UNDER THE DIRECTION OF A LICENSED PROFESSIONAL ENGINEER OR LAND SURVEYOR, TO ALTER AN ITEM IN ANY WAY. IF AN ITEM BEARING THE SEAL OF AN ENGINEER OR LAND SURVEYOR IS ALTERED, THE ALTERING ENGINEER OR LAND SURVEYOR SHALL AFFIX TO THE ITEM HIS SEAL AND NOTATION "ALTERED BY" FOLLOWED BY HIS SIGNATURE AND THE DATE OF SUCH ALTERATION, AND SPECIFIC DESCRIPTION OF THE ALTERATION.

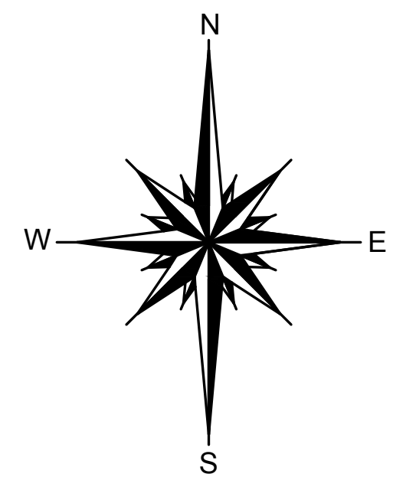

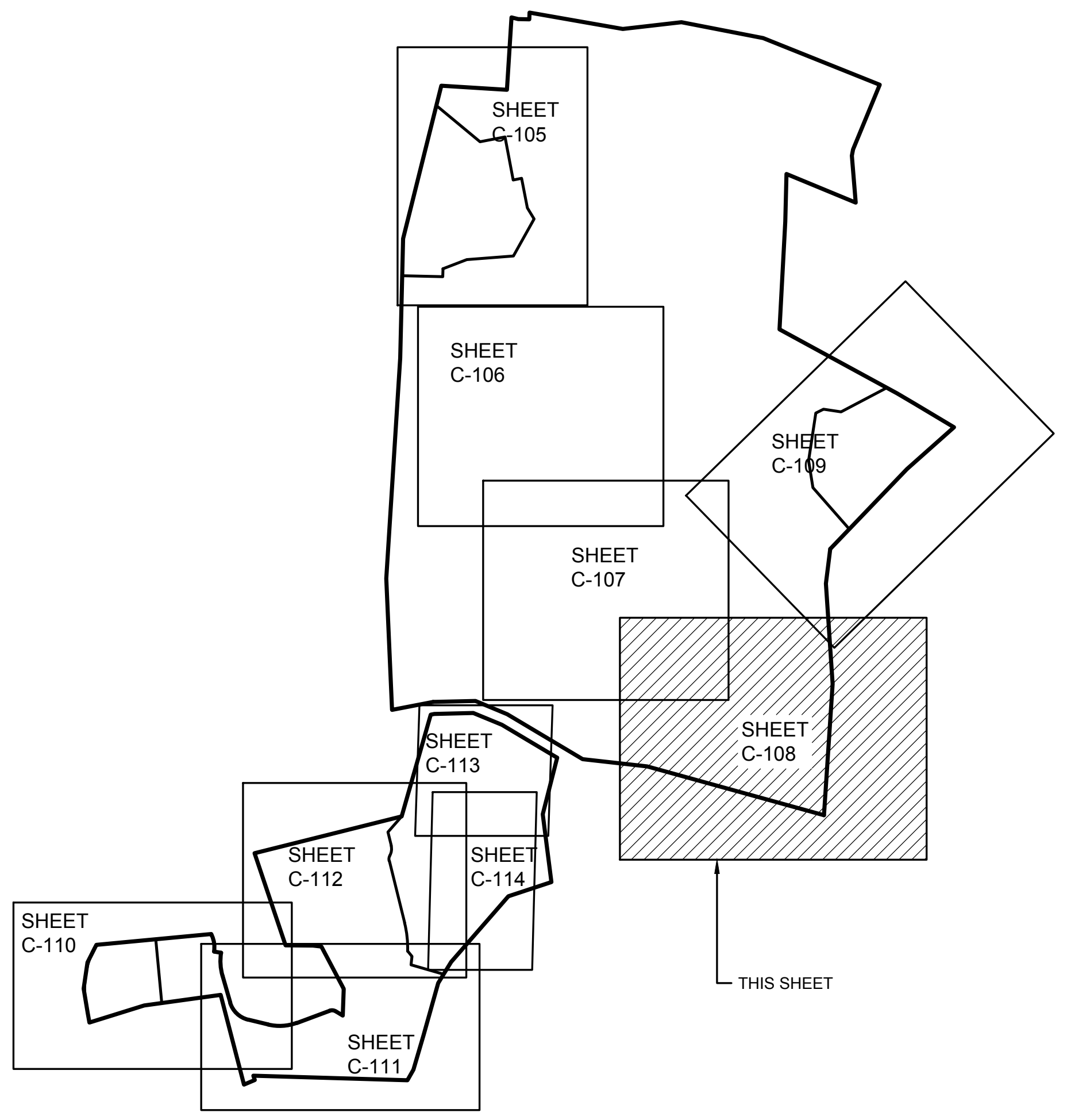
SHEET C-105
SHEET C-106
SHEET C-109
SHEET C-107
SHEET C-108
SHEET C-113
SHEET C-112
SHEET C-114
SHEET C-110
SHEET C-111
THIS SHEET

EXISTING

P92.59	PAVEMENT ELEVATION
TC92.59	TOP OF CURB ELEVATION
BC92.2	BOTTOM OF CURB ELEVATION
X92.0	SPOT ELEVATION
⊠	ELECTRIC BOX
⧅	PULL BOX
⊸	FIRE HYDRANT
G	GAS VALVE
⋈ WV	WATER VALVE
T	TRANSFORMER
⌀	ELECTRIC POLE
✲	LIGHT POLE
⊠	HIGH TENSION TOWER
W.M.	WATER MAIN
W.S.	WATER SERVICE
G.M.	GAS MAIN
---94---	CONTOUR
—— E ——	ELECTRIC
—— W ——	WATER
—— G ——	GAS
—— X ——	FENCE
—— S ——	SANITARY SEWER
—— T ——	TELEPHONE
—— OHW ——	OVERHEAD WIRE
—— D ——	DRAINAGE
—— CATV ——	TELEVISION
◎	DRAINAGE MANHOLE
▦	CATCH BASINS
✷	TREE TO BE REMOVED
	DECIDUOUS TREE TO REMAIN
✷	EVERGREEN TREE TO REMAIN
□	MONUMENT

PROPOSED

(TC92.00)	TOP OF CURB ELEVATION
(BC91.5)	BOTTOM OF CURB ELEVATION
x(92.0)	SPOT ELEVATION
LP	LEACHING POOL
CB	CATCH BASIN
SMH	SANITARY MANHOLE
DMH	DRAINAGE MANHOLE
——(93)——	CONTOUR
⊜	LEACHING POOL W/ OPEN GRATE
⊙	LEACHING POOL W/ SOLID COVER
▣	DRAINAGE BASIN
■	CATCH BASIN (TC ~ TOP OF CURB BOX)
⊸	HYDRANT
⊕ PS	STREET TREE W / SYMBOL
—— (W) ——	WATER
—— (FS) ——	FIRE SERVICE
—— (WS) ——	WATER SERVICE
—— (E) ——	ELECTRIC
—— (G) ——	GAS
—— X ——	FENCE
—— (HC) ——	SANITARY HOUSE CONNECTION
—— (D) ——	DRAINAGE
—— (RD) ——	ROOF DRAIN
—— (T) ——	TELEPHONE
—— (CATV) ——	TELEVISION
▨	CONCRETE WALK
/ —— / —— /	LIMIT OF CLEARING AND GRADING DURING CONSTRUCTION
▨	SAWCUT W/ PAVEMENT TO BE REMOVED
⊕	TEST HOLE
▬ ▬ ▬	DRAINAGE RIDGELINE
■	PROPOSED MONUMENT

FOR TOWN USE

No.	REVISION	DATE

OWNER
I.H.C.C., INC. AND
ROBERG REVOCABLE TRUST
21 BREEZE HILL ROAD
NORTHPORT, NY, 11768
(631) 261 - 5700

APPLICANT:
THE PRESERVE AT INDIAN HILLS
1 RABRO DRIVE, SUITE 100
HAUPPAUGE, N.Y. 11788
(631) 351 - 4000

GRADING PLAN 4
FOR
THE PRESERVE AT INDIAN HILLS
SITUATED AT
NORTHPORT
TOWN OF HUNTINGTON, SUFFOLK COUNTY, NEW YORK
S.C.T.M.: DISTRICT: 0400, SECT. 014, BLK. 04, LOTS 1 AND 2
DISTRICT 0400, SECT. 015, BLK. 01, LOTS 3.1, 3.2, 11, 12, 16, 19 AND P/O 22

THOMAS CHARLES DIXON
080915

NELSON + POPE
engineers • architects • surveyors
70 Maxess Road, Melville, NY 11747 • 631.427.5665 • nelsonpope.com

DRAWN BY: GEO	**CADD No.:** 86047 CSP 2021.DWG	**SCALE:**	**DRAWING NO.:**	
CHECKED BY: JM	**FILE NO.:** 400-014	1"=40'	C - 108	
DATE: OCTOBER, 2021	**PROJECT NO.:** 86047		**SHEET NO.:** 9 OF 44	

G:\projects\86047\FINALS\CONDOMINIUM\86047 CSP 2021.dwg, 9 OF 44 GRADING PLAN 4, 10/11/2021 2:26:06 PM

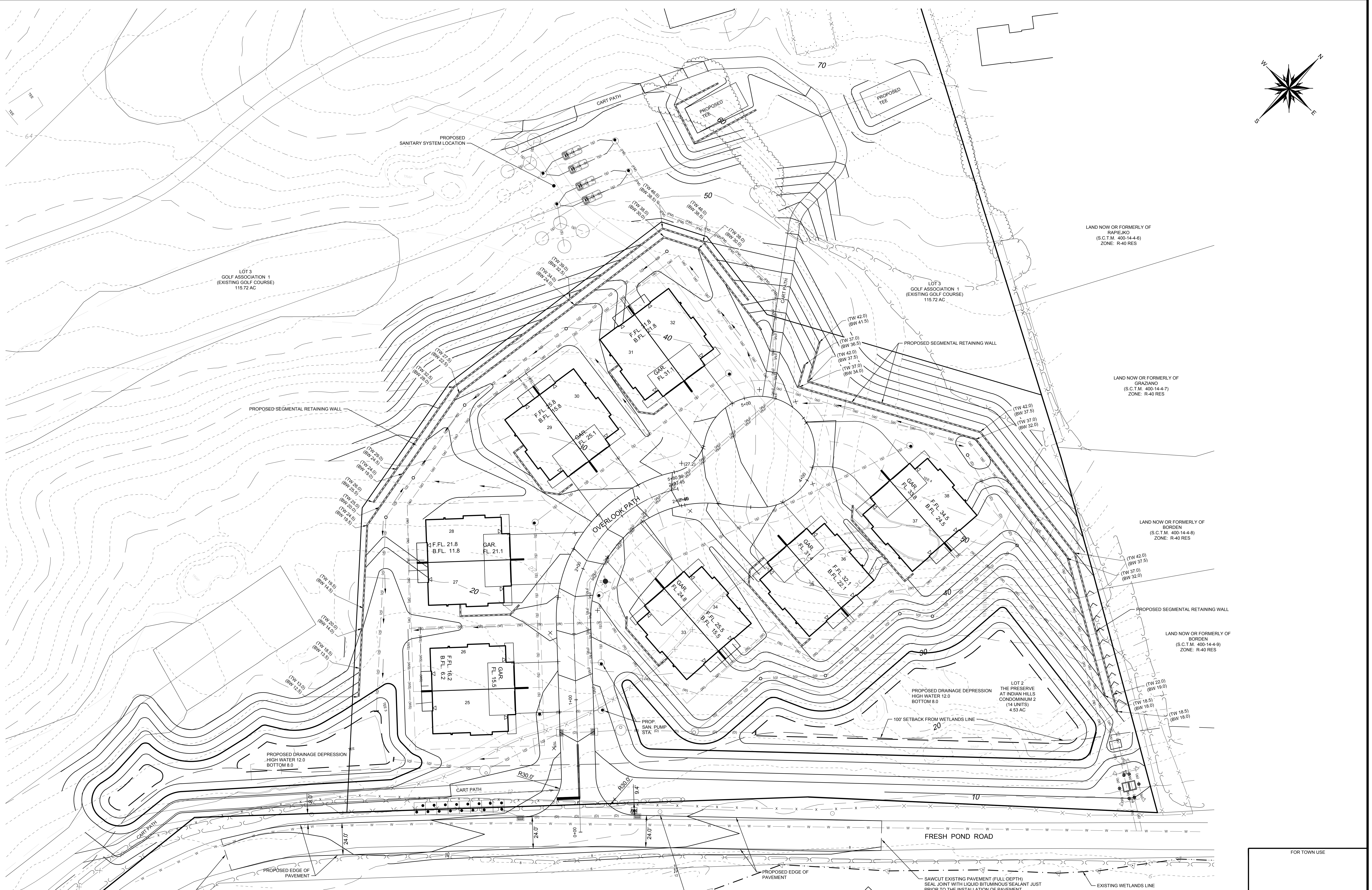
N
E
S
W
70
60
50
40
30
20
10
64
TEE
CART PATH
PROPOSED TEE
PROPOSED SANITARY SYSTEM LOCATION
LAND NOW OR FORMERLY OF RAPIEJKO (S.C.T.M. 400-14-4-6) ZONE: R-40 RES
LOT 3 GOLF ASSOCIATION 1 (EXISTING GOLF COURSE) 115.72 AC
LAND NOW OR FORMERLY OF GRAZIANO (S.C.T.M. 400-14-4-7) ZONE: R-40 RES
LAND NOW OR FORMERLY OF BORDEN (S.C.T.M. 400-14-4-8) ZONE: R-40 RES
LAND NOW OR FORMERLY OF BORDEN (S.C.T.M. 400-14-4-9) ZONE: R-40 RES
PROPOSED SEGMENTAL RETAINING WALL
(TW 46.0) (BW 38.5)
(TW 38.0) (BW 30.0)
(TW 39.0) (BW 32.5)
(TW 34.0) (BW 24.0)
(TW 27.5) (BW 22.5)
(TW 32.5) (BW 28.0)
(TW 29.0) (BW 24.5)
(TW 24.0) (BW 19.0)
(TW 26.0) (BW 25.5)
(TW 25.0) (BW 20.0)
(TW 24.5) (BW 19.5)
(TW 19.5) (BW 14.5)
(TW 20.0) (BW 14.0)
(TW 18.5) (BW 13.5)
(TW 13.0) (BW 12.5)
(TW 42.0) (BW 41.5)
(TW 37.0) (BW 36.5)
(TW 42.0) (BW 37.5)
(TW 37.0) (BW 34.0)
(TW 37.0) (BW 32.0)
(TW 22.0) (BW 19.0)
(TW 18.5) (BW 18.0)
F.FL. 31.8 B.FL. 21.8
GAR. FL. 31.1
F.FL. 25.8 B.FL. 15.8
GAR. FL. 25.1
F.FL. 21.8 B.FL. 11.8
GAR. FL. 21.1
F.FL. 16.2 B.FL. 6.2
GAR. FL. 15.5
GAR. FL. 24.8
F.FL. 25.5 B.FL. 15.5
GAR. FL. 31.4
F.FL. 32.1 B.FL. 22.1
GAR. FL. 33.8
F.FL. 34.5 B.FL. 24.5
25
26
27
28
29
30
31
32
33
34
35
36
37
38
OVERLOOK PATH
5+00
4+00
2+00
1+00
0+00
(27.2)
PROP. SAN. PUMP STA.
PROPOSED DRAINAGE DEPRESSION HIGH WATER 12.0 BOTTOM 8.0
LOT 2 THE PRESERVE AT INDIAN HILLS CONDOMINIUM 2 (14 UNITS) 4.53 AC
100' SETBACK FROM WETLANDS LINE
R30.0'
9.4'
24.0'
FRESH POND ROAD
PROPOSED EDGE OF PAVEMENT
SAWCUT EXISTING PAVEMENT (FULL DEPTH) SEAL JOINT WITH LIQUID BITUMINOUS SEALANT JUST PRIOR TO THE INSTALLATION OF PAVEMENT
EXISTING WETLANDS LINE
PROVIDE MINIMUM OF 18" CLEARANCE FROM FACE OF POLE TO EDGE OF PAVEMENT

FOR TOWN USE

EXISTING

P92.59	PAVEMENT ELEVATION
TC92.59	TOP OF CURB ELEVATION
BC92.2	BOTTOM OF CURB ELEVATION
X92.0	SPOT ELEVATION
⊠	ELECTRIC BOX
⧄	PULL BOX
	FIRE HYDRANT
G	GAS VALVE
WV	WATER VALVE
T	TRANSFORMER
	ELECTRIC POLE
✡	LIGHT POLE
⊠	HIGH TENSION TOWER
W.M.	WATER MAIN
W.S.	WATER SERVICE
G.M.	GAS MAIN
94	CONTOUR
E	ELECTRIC
W	WATER
G	GAS
X	FENCE
S	SANITARY SEWER
T	TELEPHONE
OHW	OVERHEAD WIRE
D	DRAINAGE
CATV	TELEVISION
	DRAINAGE MANHOLE
	CATCH BASINS
	TREE TO BE REMOVED
	DECIDUOUS TREE TO REMAIN
	EVERGREEN TREE TO REMAIN
□	MONUMENT

PROPOSED

(TC92.00)	TOP OF CURB ELEVATION
(BC91.5)	BOTTOM OF CURB ELEVATION
x(92.0)	SPOT ELEVATION
LP	LEACHING POOL
CB	CATCH BASIN
SMH	SANITARY MANHOLE
DMH	DRAINAGE MANHOLE
(93)	CONTOUR
	LEACHING POOL W/ OPEN GRATE
	LEACHING POOL W/ SOLID COVER
	DRAINAGE BASIN
■	CATCH BASIN (TC ~ TOP OF CURB BOX)
	HYDRANT
PS	STREET TREE W / SYMBOL
	PICKET RAIL FENCE
(W)	WATER
(FS)	FIRE SERVICE
(WS)	WATER SERVICE
(E)	ELECTRIC
(G)	GAS
X	FENCE
(HC)	SANITARY HOUSE CONNECTION
(D)	DRAINAGE
(RD)	ROOF DRAIN
(T)	TELEPHONE
(CATV)	TELEVISION
	CONCRETE WALK
/ / /	LIMIT OF CLEARING AND GRADING DURING CONSTRUCTION
	SAWCUT W/ PAVEMENT TO BE REMOVED
	TEST HOLE
	DRAINAGE RIDGELINE
■	PROPOSED MONUMENT

IT IS A VIOLATION OF NEW YORK STATE EDUCATION LAW ARTICLE 145, PROFESSIONAL ENGINEERING AND LAND SURVEYING, SECTION 7209 FOR ANY PERSON, UNLESS HE IS ACTING UNDER THE DIRECTION OF A LICENSED PROFESSIONAL ENGINEER OR LAND SURVEYOR, TO ALTER AN ITEM IN ANY WAY. IF AN ITEM BEARING THE SEAL OF AN ENGINEER OR LAND SURVEYOR IS ALTERED, THE ALTERING ENGINEER OR LAND SURVEYOR SHALL AFFIX TO THE ITEM HIS SEAL AND NOTATION "ALTERED BY" FOLLOWED BY HIS SIGNATURE AND THE DATE OF SUCH ALTERATION, AND SPECIFIC DESCRIPTION OF THE ALTERATION.

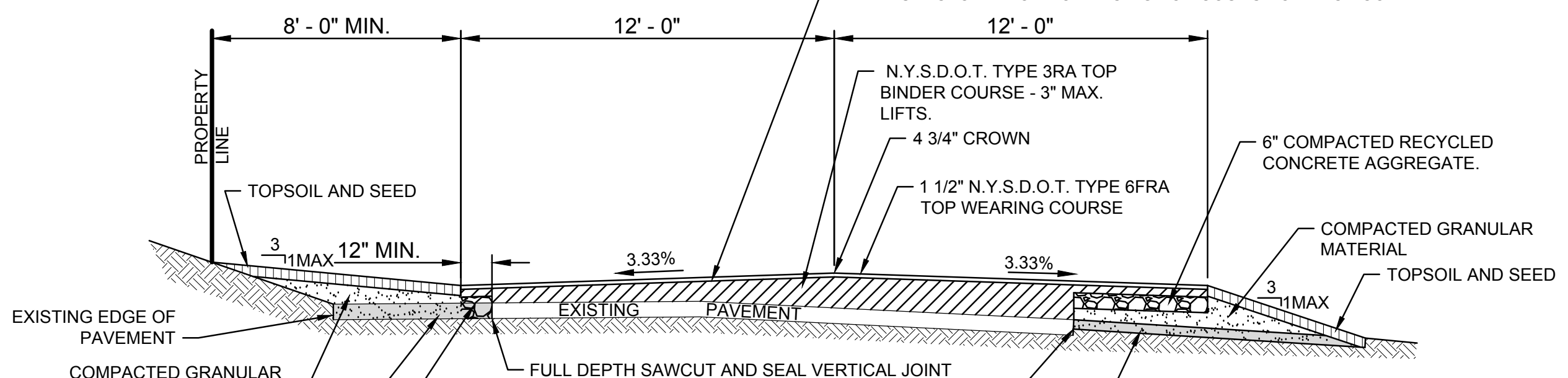
8' - 0" MIN.
12' - 0"
12' - 0"
PROPERTY LINE
3
1MAX
12" MIN.
3.33%
3.33%
EXISTING
PAVEMENT

TACK COAT (PER N.Y.S.D.O.T. ITEM 407.0101) EMULSIFIED ASPHALT PLACED AT A RATE OF BETWEEN 0.05 AND 0.15 GAL/SQ.YD. USE IF TOP IS PLACED MORE THAN 6 MONTHS AFTER BINDER IS INSTALLED. SURFACE TO BE CLEAN AND DRY AND INSPECTED BY THE TOWN ENGINEERING INSPECTOR PRIOR TO PLACING TOP COURSE OR TACK COAT.

N.Y.S.D.O.T. TYPE 3RA TOP BINDER COURSE - 3" MAX. LIFTS.

4 3/4" CROWN

1 1/2" N.Y.S.D.O.T. TYPE 6FRA TOP WEARING COURSE

6" COMPACTED RECYCLED CONCRETE AGGREGATE.

COMPACTED GRANULAR MATERIAL

TOPSOIL AND SEED

TOPSOIL AND SEED

EXISTING EDGE OF PAVEMENT

COMPACTED GRANULAR MATERIAL

REMOVE EXISTING PAVEMENT

6" COMPACTED RECYCLED CONCRETE AGGREGATE.

FULL DEPTH SAWCUT AND SEAL VERTICAL JOINT WITH LIQUID BITUMINOUS JOINT SEALER IMMEDIATELY PROCEEDING PLACEMENT OF ASPHALT.

EXISTING EDGE OF PAVEMENT

COMPACTED EXISTING GROUND IF SUITABLE. REMOVE ALL UNSUITABLE MATERIAL AND REPLACE WITH SUITABLE COMPACTED MATERIAL. ALL AS DIRECTED BY THE TOWN ENGINEER. COMPACTION UTILIZING OPTIMUM MOISTURE CONTENT TO AT LEAST 95% STANDARD PROCTOR DENSITY. SUBMIT TEST RESULTS FROM ASTM D698 (MOISTURE) AND ASTM D2922 (DENSITY PER NUCLEAR METHODS) FOR REVIEW.

FRESH POND ROAD
ROAD IMPROVEMENT SECTION

NOT TO SCALE

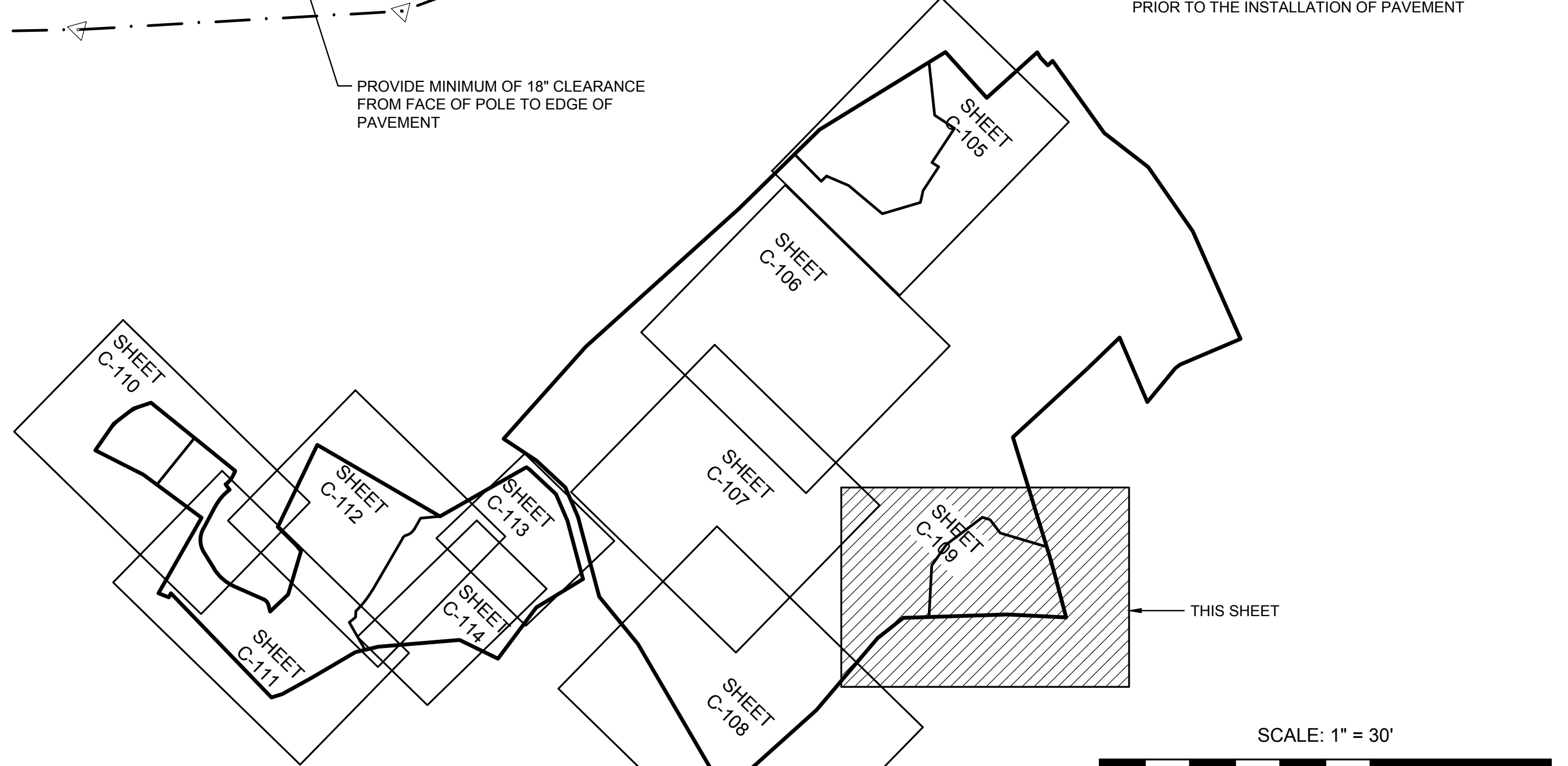
SHEET C-105
SHEET C-106
SHEET C-107
SHEET C-108
SHEET C-109
SHEET C-110
SHEET C-111
SHEET C-112
SHEET C-113
SHEET C-114
THIS SHEET

SCALE: 1" = 30'

0 30 60 100

No.	REVISION	DATE

OWNER
I.H.C.C., INC. AND
ROBERG REVOCABLE TRUST
21 BREEZE HILL ROAD
NORTHPORT, NY, 11768
(631) 261 - 5700

APPLICANT:
THE PRESERVE AT INDIAN HILLS
1 RABRO DRIVE, SUITE 100
HAUPPAUGE, N.Y. 11788
(631) 351 - 4000

GRADING PLAN 5
FOR
THE PRESERVE AT INDIAN HILLS
SITUATED AT
NORTHPORT
TOWN OF HUNTINGTON, SUFFOLK COUNTY, NEW YORK
S.C.T.M.: DISTRICT: 0400, SECT. 014, BLK. 04, LOTS 1 AND 2
DISTRICT 0400, SECT. 015, BLK. 01, LOTS 3.1, 3.2, 11, 12, 16, 19 AND P/O 22

THOMAS CHARLES DIXON
080919

NELSON + POPE
engineers • architects • surveyors
70 Maxess Road, Melville, NY 11747 • 631.427.5665 • nelsonpope.com

DRAWN BY: GEO	CADD No.: 86047 CSP 2021.DWG	SCALE:	DRAWING NO.:
CHECKED BY: JM	FILE NO.: 400-014	1"=30'	C - 109
DATE: OCTOBER, 2021	PROJECT NO.: 86047		SHEET NO.: 10 OF 44

G:\projects\86047\FINALS\CONDOMINIUM\86047 CSP 2021.dwg, 10 OF 44 GRADING PLAN 5, 10/11/2021 2:26:53 PM

N
E
S
W
EXISTING WETLANDS LINE
MAKAMAH ROAD
UTILITY POLE
LAND NOW OR FORMERLY
OF EMORY
REVOCABLE LIVING TRUST
(S.C.T.M. 400-15-1-1)
ZONE: R-40 RES
LAND NOW OR FORMERLY
OF ROBERG
REVOCABLE LIVING TRUST
(S.C.T.M. 400-15-1-2.1)
ZONE: R-40 RES
(4) LAND NOW OR FORMERLY OF
UNKNOWN OWNER
(S.C.T.M. 400-15-1-22)
ZONE: R-40 RES
100' SETBACK FROM WETLANDS LINE
LOT 5
THE PRESERVE
AT INDIAN HILLS
CONDOMINIUM 3
(36 UNITS)
14.46 AC
(5) LAND NOW OR FORMERLY OF
FEDERICO
(S.C.T.M. 400-15-1-4)
ZONE: R-40 RES
(2) LAND NOW OR FORMERLY OF
BUBARIS
(S.C.T.M. 400-15-1-17)
ZONE: R-40 RES
CHAIN LINK FENCE
LOT 6
#40 AND #42
MAKAMAH
ROAD
2.00 AC
HIGH WATER 28.0
BOTTOM 23.0
VOLUME 76,000 CF
1-STORY FRAME RESIDENCE
ASPHALT DRIVEWAY
RAILROAD TIE CURB
DIRT ROAD
SERENE PLACE
R=250.58'
L=112.45'
N16° 19' 30"W
6+31.33
7+00
8+00
9+00
10+00
11+00
12+00
13+00
(3) LAND NOW OR FORMERLY OF
BERG
(S.C.T.M. 400-15-1-18)
ZONE: R-40 RES
20' WIDE EMERGENCY
ACCESS ROAD SECTION
(TW 36.5)
(BW 36.0)
(TW 38.5)
(BW 36.0)
PROPOSED
SEGMENTAL RETAINING WALL
(TW 42.0)
(BW 36.5)
26' WIDE STANDARD
PAVEMENT SECTION
PROPOSED CONCRETE
WALL
(TW 45.0)
(BW 40.0)
(TW 48.5)
(BW 42.5)
(1) LAND NOW OR FORMERLY OF
JEROME
(S.C.T.M. 400-15-1-20)
ZONE: R-40 RES
S76° 03' 15"E 197.95'
N69° 44' 10"E 256.05'
PROPOSED
SANITARY PUMP STATION
(TW 54.0)
(BW 42.0)
GAR. FL. 59.5
F.FL. 60.2
B.FL. 50.2
GAR. FL. 68.0
F.FL. 68.7
B.FL. 58.7
GAR. FL. 76.5
100' WETLANDS SETBACK

SCALE: 1" = 30'

0 30 60 100

EXISTING

P92.59	PAVEMENT ELEVATION	94	CONTOUR
TC92.59	TOP OF CURB ELEVATION	E	ELECTRIC
BC92.2	BOTTOM OF CURB ELEVATION	W	WATER
X92.0	SPOT ELEVATION	G	GAS
☒	ELECTRIC BOX	X	FENCE
	PULL BOX	S	SANITARY SEWER
	FIRE HYDRANT	T	TELEPHONE
G	GAS VALVE	OHW	OVERHEAD WIRE
WV	WATER VALVE	D	DRAINAGE
T	TRANSFORMER	CATV	TELEVISION
	ELECTRIC POLE		DRAINAGE MANHOLE
	LIGHT POLE		CATCH BASINS
☒	HIGH TENSION TOWER		TREE TO BE REMOVED
W.M.	WATER MAIN		DECIDUOUS TREE TO REMAIN
W.S.	WATER SERVICE		EVERGREEN TREE TO REMAIN
G.M.	GAS MAIN	☐	MONUMENT

PROPOSED

(TC92.00)	TOP OF CURB ELEVATION	(W)	WATER
(BC91.5)	BOTTOM OF CURB ELEVATION	(FS)	FIRE SERVICE
x(92.0)	SPOT ELEVATION	(WS)	WATER SERVICE
LP	LEACHING POOL	(E)	ELECTRIC
CB	CATCH BASIN	(G)	GAS
SMH	SANITARY MANHOLE	X	FENCE
DMH	DRAINAGE MANHOLE	(HC)	SANITARY HOUSE CONNECTION
(93)	CONTOUR	(D)	DRAINAGE
○	LEACHING POOL W/ OPEN GRATE	(RD)	ROOF DRAIN
○	LEACHING POOL W/ SOLID COVER	(T)	TELEPHONE
▣	DRAINAGE BASIN	(CATV)	TELEVISION
■	CATCH BASIN (TC ~ TOP OF CURB BOX)		PICKET RAIL FENCE
	HYDRANT	/ / /	LIMIT OF CLEARING AND GRADING DURING CONSTRUCTION
(+) PS	STREET TREE W / SYMBOL	▨	SAWCUT W/ PAVEMENT TO BE REMOVED
	TREE TO BE REMOVED		TEST HOLE
	CONCRETE WALK		DRAINAGE RIDGELINE
		■	PROPOSED MONUMENT

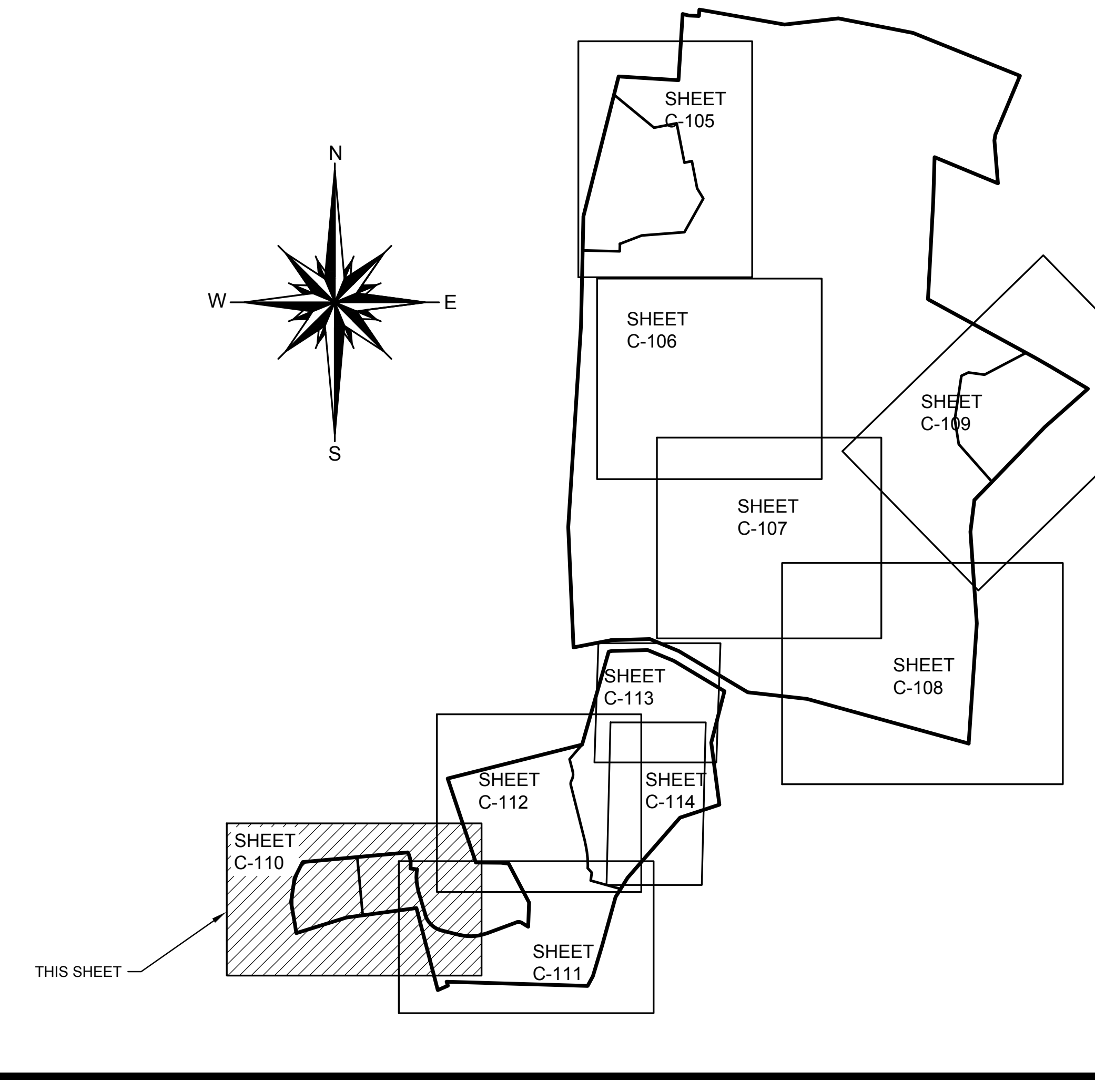
N
E
S
W
SHEET C-105
SHEET C-106
SHEET C-109
SHEET C-107
SHEET C-108
SHEET C-113
SHEET C-112
SHEET C-114
SHEET C-110
SHEET C-111
THIS SHEET

IT IS A VIOLATION OF NEW YORK STATE EDUCATION LAW ARTICLE 145, PROFESSIONAL ENGINEERING AND LAND SURVEYING, SECTION 7209 FOR ANY PERSON, UNLESS HE IS ACTING UNDER THE DIRECTION OF A LICENSED PROFESSIONAL ENGINEER OR LAND SURVEYOR, TO ALTER AN ITEM IN ANY WAY. IF AN ITEM BEARING THE SEAL OF AN ENGINEER OR LAND SURVEYOR IS ALTERED, THE ALTERING ENGINEER OR LAND SURVEYOR SHALL AFFIX TO THE ITEM HIS SEAL AND NOTATION "ALTERED BY" FOLLOWED BY HIS SIGNATURE AND THE DATE OF SUCH ALTERATION, AND SPECIFIC DESCRIPTION OF THE ALTERATION.

FOR TOWN USE

No.	REVISION	DATE

OWNER
I.H.C.C., INC. AND
ROBERG REVOCABLE TRUST
21 BREEZE HILL ROAD
NORTHPORT, NY, 11768
(631) 261 - 5700

APPLICANT:
THE PRESERVE AT INDIAN HILLS
1 RABRO DRIVE, SUITE 100
HAUPPAUGE, N.Y. 11788
(631) 351 - 4000

GRADING PLAN 6
FOR
THE PRESERVE AT INDIAN HILLS
SITUATED AT
NORTHPORT
TOWN OF HUNTINGTON, SUFFOLK COUNTY, NEW YORK
S.C.T.M.: DISTRICT: 0400, SECT. 014, BLK. 04, LOTS 1 AND 2
DISTRICT 0400, SECT. 015, BLK. 01, LOTS 3.1, 3.2, 11, 12, 16, 19 AND P/O 22

THOMAS CHARLES DIXON

NELSON + POPE
engineers • architects • surveyors
70 Maxess Road, Melville, NY 11747 • 631.427.5665 • nelsonpope.com

DRAWN BY: GEO	CADD No.: 86047 CSP 2021.DWG	SCALE:	DRAWING NO.: C - 110
CHECKED BY: JM	FILE NO.: 400-014	1"=30'	
DATE: OCTOBER, 2021	PROJECT NO.: 86047		SHEET NO.: 11 OF 44

G:\projects\86047\FINALS\CONDOMINIUM\86047 CSP 2021.dwg, 11 OF 44 GRADING PLAN 6, 10/11/2021 2:27:47 PM

(5) LAND NOW OR FORMERLY OF
FEDERICO
(S.C.T.M. 400-15-1-4)
ZONE: R-40 RES
N
E
S
W
(2) LAND NOW OR FORMERLY OF
BUBARIS
(S.C.T.M. 400-15-1-17)
ZONE: R-40 RES
(3) LAND NOW OR FORMERLY OF
BERG
(S.C.T.M. 400-15-1-18)
ZONE: R-40 RES
PROPOSED ACCESS EASEMENT FOR S.C.T.M. LOTS 0400 - 015.000 - 01.00 - 017.000 AND 018.000 FOR THE PURPOSE OF INGRESS AND EGRESS. OWNERSHIP AND MAINTENANCE OF DRAINAGE, SANITARY AND SURFACE STRUCTURES SHALL BE ASSOCIATED WITH THE HOMEOWNER'S ASSOCIATION
20' WIDE EMERGENCY ACCESS ROAD SECTION
26' WIDE STANDARD ROAD SECTION
PROPOSED CONCRETE WALL / CURB
SANITARY PUMP STATION
SERENE PLACE
COUNTRY CLUB DRIVE
LOT 4
GOLF ASSOCIATION 2
(PROPOSED CLUBHOUSE, FITNESS CENTER AND DRIVING RANGE)
11.95 AC
LOT 5
THE PRESERVE AT INDIAN HILLS CONDOMINIUM 3
(36 UNITS)
14.46 AC
LAND NOW OR FORMERLY OF
GREENFIELD
(S.C.T.M. 400-15-1-14)
ZONE: R-40 RES
LAND NOW OR FORMERLY OF
SHAMPINATO
(S.C.T.M. 400-15-1-15)
ZONE: R-40 RES
PROPOSED SEGMENTAL WALL
(1) LAND NOW OR FORMERLY OF
JEROME
(S.C.T.M. 400-15-1-20)
ZONE: R-40 RES
HIGH WATER 40.0
BOTTOM 36.0
VOLUME 7,700 CF
LAND NOW OR FORMERLY OF
BOZZELLA
(S.C.T.M. 400-15-3-8.2)
ZONE: R-40 RES
LAND NOW OR FORMERLY OF
DANTONI
(S.C.T.M. 400-15-3-31.16)
ZONE: R-40 RES
GAR. FL. 59.5
F.FL. 60.2
B.FL. 50.2
GAR. FL. 68.0
F.FL. 68.7
B.FL. 58.7
GAR. FL. 76.5
F.FL. 77.2
B.FL. 67.2
GAR. FL. 83.6
F.FL. 84.3
B.FL. 74.3
GAR. FL. 90.8
F.FL. 91.5
B.FL. 81.5
GAR. FL. 94.2
F.FL. 94.9
B.FL. 84.9
GAR. FL. 95.8
F.FL. 96.5
B.FL. 86.5
GAR. FL. 95.0
F.FL. 95.7
B.FL. 85.7
GAR. FL. 93.0
F.FL. 93.7
B.FL. 82.7
GAR. FL. 90.8
F.FL. 91.5
B.FL. 81.5
GAR. FL. 92.0
F.FL. 92.7
B.FL. 82.7
GAR. FL. 94.2
F.FL. 96.5
B.FL. 88.5
GAR. FL. 95.8
F.FL. 96.5
B.FL. 86.5
(TW 36.5) (BW 36.0)
(TW 38.5) (BW 36.0)
(TW 42.0) (BW 36.5)
(TW 45.0) (BW 40.0)
(TW 48.5) (BW 42.5)
(TW 54.0) (BW 42.0)
(TW 59.0) (BW 49.5)
(TW 66.0) (BW 58.0)
(TW 64.0) (BW 57.0)
(TW 76.0) (BW 66.0)
(TW 74.0) (BW 64.0)
(TW 74.0) (BW 73.5)
(TW 80.5) (BW 80.0)
(TW 92.5) (BW 88.0)
(TW 92.5) (BW 92.0)
(TW 94.0) (BW 93.5)
(TW 101.0) (BW 94.0)
(TW 101.0) (BW 94.5)
(TW 91.5) (BW 91.0)
(TW 92.0) (BW 91.5)
(TW 90.0) (BW 85.5)
(TW 90.0) (BW 89.5)
(TW 89.5) (BW 89.0)
(TW 93.5) (BW 88.5)
(TW 90.5) (BW 90.0)
RIM=92.35
60
70
100
110

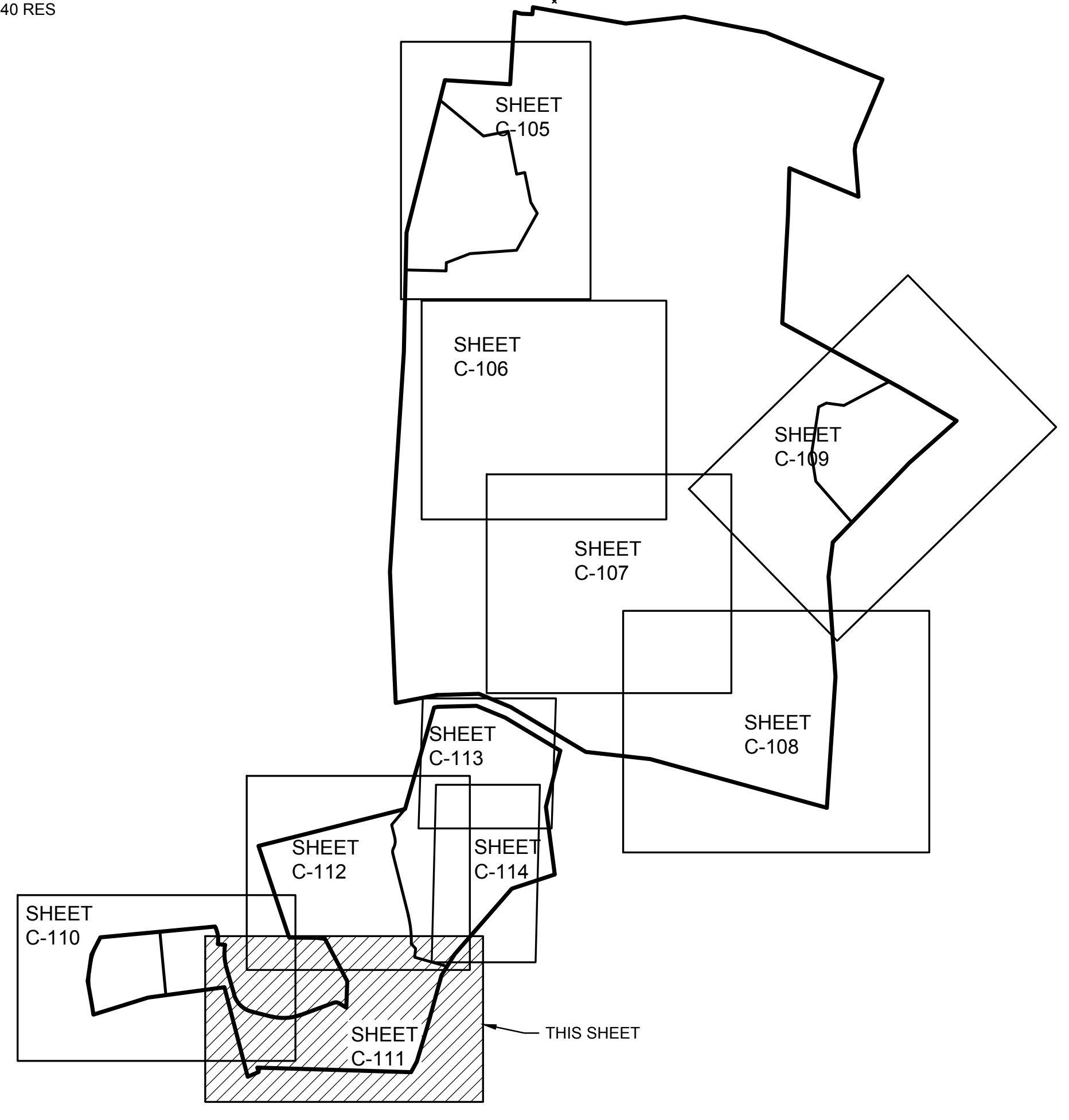
SHEET C-105
SHEET C-106
SHEET C-109
SHEET C-107
SHEET C-108
SHEET C-113
SHEET C-112
SHEET C-114
SHEET C-110
SHEET C-111
THIS SHEET

SCALE: 1" = 30'
0 30 60 100

EXISTING

P92.59	PAVEMENT ELEVATION
TC92.59	TOP OF CURB ELEVATION
BC92.2	BOTTOM OF CURB ELEVATION
X92.0	SPOT ELEVATION
⊠	ELECTRIC BOX
⊠	PULL BOX
	FIRE HYDRANT
G	GAS VALVE
WV	WATER VALVE
T	TRANSFORMER
	ELECTRIC POLE
	LIGHT POLE
⊠	HIGH TENSION TOWER
W.M.	WATER MAIN
W.S.	WATER SERVICE
G.M.	GAS MAIN

94	CONTOUR
E	ELECTRIC
W	WATER
G	GAS
X	FENCE
S	SANITARY SEWER
T	TELEPHONE
OHW	OVERHEAD WIRE
D	DRAINAGE
CATV	TELEVISION
	DRAINAGE MANHOLE
	CATCH BASINS
	TREE TO BE REMOVED
	DECIDUOUS TREE TO REMAIN
	EVERGREEN TREE TO REMAIN
□	MONUMENT

PROPOSED

(TC92.00)	TOP OF CURB ELEVATION
(BC91.5)	BOTTOM OF CURB ELEVATION
x(92.0)	SPOT ELEVATION
LP	LEACHING POOL
CB	CATCH BASIN
SMH	SANITARY MANHOLE
DMH	DRAINAGE MANHOLE
(93)	CONTOUR
○	LEACHING POOL W/ OPEN GRATE
○	LEACHING POOL W/ SOLID COVER
▣	DRAINAGE BASIN
■	CATCH BASIN (TC ~ TOP OF CURB BOX)
	HYDRANT
⊕ PS	STREET TREE W / SYMBOL
	PICKET RAIL FENCE

(W)	WATER
(FS)	FIRE SERVICE
(WS)	WATER SERVICE
(E)	ELECTRIC
(G)	GAS
X	FENCE
(HC)	SANITARY HOUSE CONNECTION
(D)	DRAINAGE
(RD)	ROOF DRAIN
(T)	TELEPHONE
(CATV)	TELEVISION
	CONCRETE WALK
/ / /	LIMIT OF CLEARING AND GRADING DURING CONSTRUCTION
▨	SAWCUT W/ PAVEMENT TO BE REMOVED
⊕	TEST HOLE
	DRAINAGE RIDGELINE
■	PROPOSED MONUMENT

IT IS A VIOLATION OF NEW YORK STATE EDUCATION LAW ARTICLE 145, PROFESSIONAL ENGINEERING AND LAND SURVEYING, SECTION 7209 FOR ANY PERSON, UNLESS HE IS ACTING UNDER THE DIRECTION OF A LICENSED PROFESSIONAL ENGINEER OR LAND SURVEYOR, TO ALTER AN ITEM IN ANY WAY. IF AN ITEM BEARING THE SEAL OF AN ENGINEER OR LAND SURVEYOR IS ALTERED, THE ALTERING ENGINEER OR LAND SURVEYOR SHALL AFFIX TO THE ITEM HIS SEAL AND NOTATION "ALTERED BY" FOLLOWED BY HIS SIGNATURE AND THE DATE OF SUCH ALTERATION, AND SPECIFIC DESCRIPTION OF THE ALTERATION.

FOR TOWN USE

No.	REVISION	DATE

OWNER
I.H.C.C., INC. AND
ROBERG REVOCABLE TRUST
21 BREEZE HILL ROAD
NORTHPORT, NY, 11768
(631) 261 - 5700

APPLICANT:
THE PRESERVE AT INDIAN HILLS
1 RABRO DRIVE, SUITE 100
HAUPPAUGE, N.Y. 11788
(631) 351 - 4000

GRADING PLAN 7
FOR
THE PRESERVE AT INDIAN HILLS
SITUATED AT
NORTHPORT
TOWN OF HUNTINGTON, SUFFOLK COUNTY, NEW YORK
S.C.T.M.: DISTRICT: 0400, SECT. 014, BLK. 04, LOTS 1 AND 2
DISTRICT 0400, SECT. 015, BLK. 01, LOTS 3.1, 3.2, 11, 12, 16, 19 AND P/O 22

THOMAS CHARLES DIXON
080911

NELSON + POPE
engineers • architects • surveyors
70 Maxess Road, Melville, NY 11747 • 631.427.5665 • nelsonpope.com

DRAWN BY: GEO	CADD No.: 86047 CSP 2021.DWG	SCALE:	DRAWING NO.: C - 111
CHECKED BY: JM	FILE NO.: 400-014	1"=30'	
DATE: OCTOBER, 2021	PROJECT NO.: 86047		SHEET NO.: 12 OF 44

G:\projects\86047\FINALS\CONDOMINIUM\86047 CSP 2021.dwg, 12 OF 44 GRADING PLAN 7, 10/11/2021 2:28:41 PM

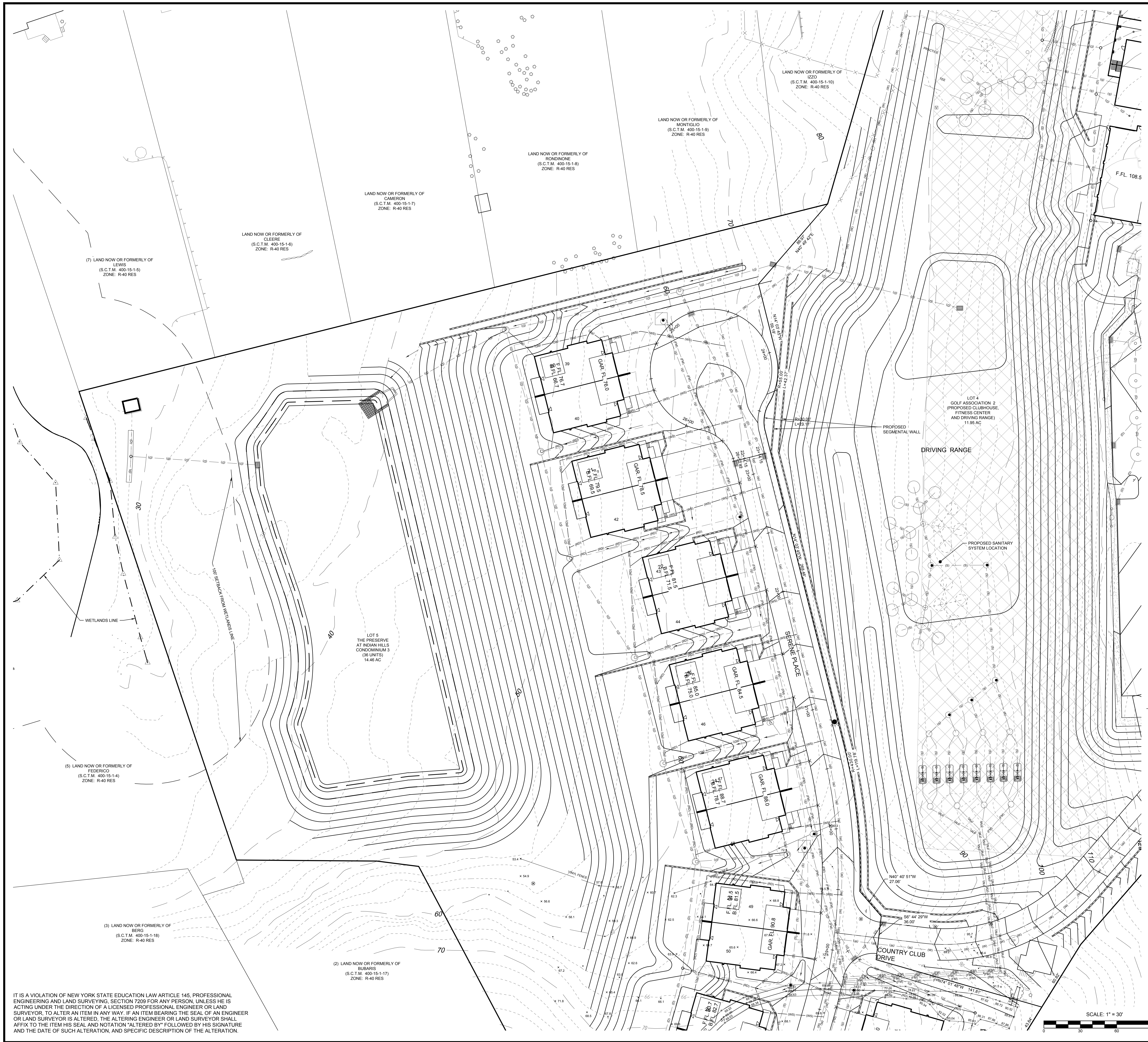
N
W
E
S
LAND NOW OR FORMERLY OF IZZO (S.C.T.M. 400-15-1-10) ZONE: R-40 RES
LAND NOW OR FORMERLY OF MONTIGLIO (S.C.T.M. 400-15-1-9) ZONE: R-40 RES
LAND NOW OR FORMERLY OF RONDINONE (S.C.T.M. 400-15-1-8) ZONE: R-40 RES
LAND NOW OR FORMERLY OF CAMERON (S.C.T.M. 400-15-1-7) ZONE: R-40 RES
LAND NOW OR FORMERLY OF CLEERE (S.C.T.M. 400-15-1-6) ZONE: R-40 RES
(7) LAND NOW OR FORMERLY OF LEWIS (S.C.T.M. 400-15-1-5) ZONE: R-40 RES
(5) LAND NOW OR FORMERLY OF FEDERICO (S.C.T.M. 400-15-1-4) ZONE: R-40 RES
(3) LAND NOW OR FORMERLY OF BERG (S.C.T.M. 400-15-1-18) ZONE: R-40 RES
(2) LAND NOW OR FORMERLY OF BUBARIS (S.C.T.M. 400-15-1-17) ZONE: R-40 RES
LOT 5 THE PRESERVE AT INDIAN HILLS CONDOMINIUM 3 (36 UNITS) 14.46 AC
LOT 4 GOLF ASSOCIATION 2 (PROPOSED CLUBHOUSE, FITNESS CENTER AND DRIVING RANGE) 11.95 AC
DRIVING RANGE
PROPOSED SEGMENTAL WALL
PROPOSED SANITARY SYSTEM LOCATION
WETLANDS LINE
100' SETBACK FROM WETLANDS LINE
SERENE PLACE
COUNTRY CLUB DRIVE
R=55.00'
L=42.37'
R=30.00'
L=23.11'
N40° 40' 51"W 27.06'
S6° 44' 29"W 36.00'
N74° 01' 48"W 141.81'
60.82'
43.64'
GAR. FL. 76.0
GAR. FL. 78.5
GAR. FL. 84.5
GAR. FL. 88.0
GAR. FL. 90.8
F.FL. 108.5
39
40
42
44
46
49
50
24+00
23+00
30
40
50
60
70
80
90
100
110
SCALE: 1" = 30'
0
30
60
100

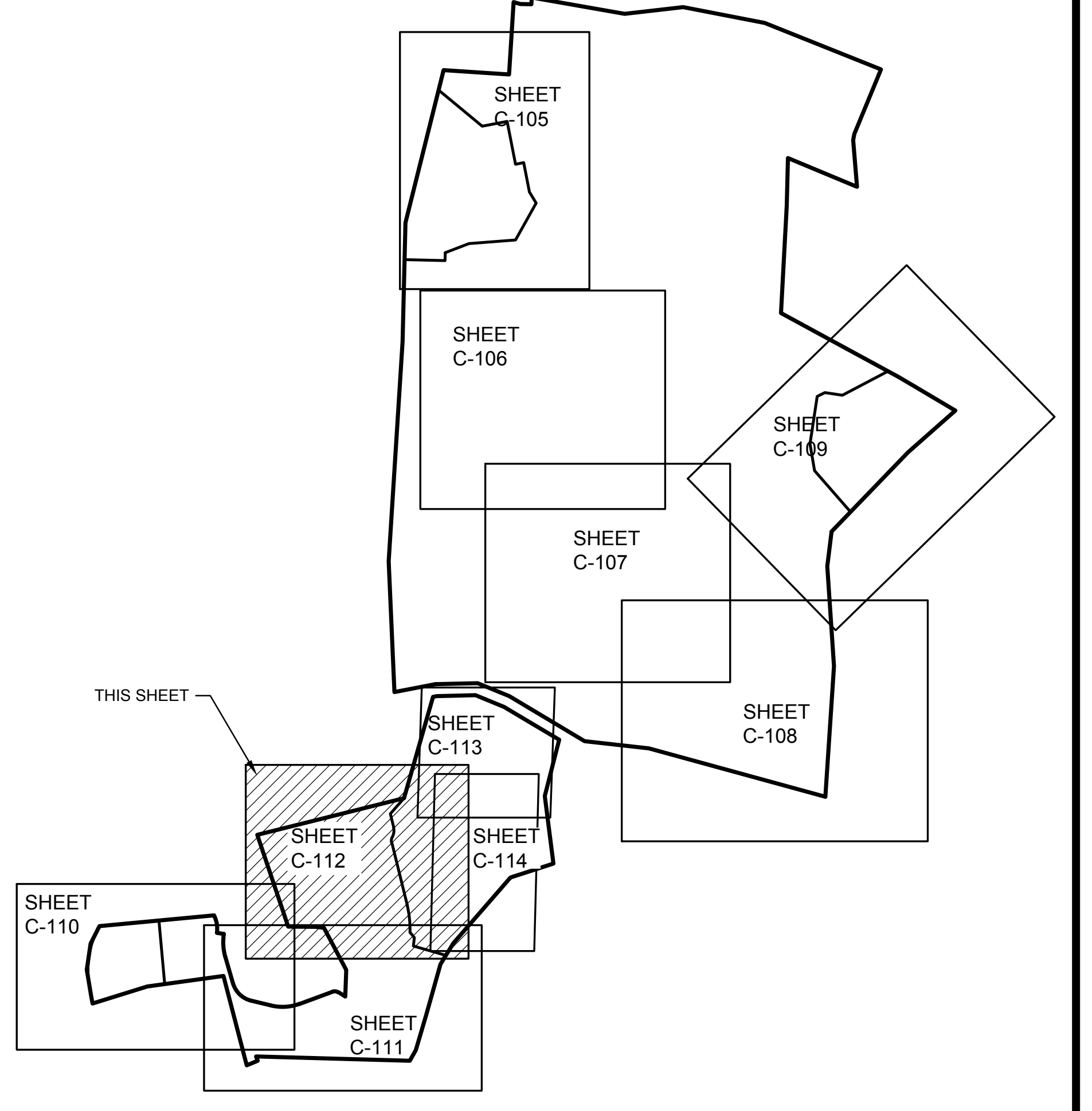
SHEET C-105
SHEET C-106
SHEET C-109
SHEET C-107
SHEET C-108
THIS SHEET
SHEET C-113
SHEET C-112
SHEET C-114
SHEET C-110
SHEET C-111

EXISTING

P92.59	PAVEMENT ELEVATION	94	CONTOUR
TC92.59	TOP OF CURB ELEVATION	E	ELECTRIC
BC92.2	BOTTOM OF CURB ELEVATION	W	WATER
X92.0	SPOT ELEVATION	G	GAS
⊠	ELECTRIC BOX	X	FENCE
⊠	PULL BOX	S	SANITARY SEWER
	FIRE HYDRANT	T	TELEPHONE
G	GAS VALVE	OHW	OVERHEAD WIRE
WV	WATER VALVE	D	DRAINAGE
T	TRANSFORMER	CATV	TELEVISION
	ELECTRIC POLE	◎	DRAINAGE MANHOLE
✡	LIGHT POLE	▦	CATCH BASINS
⊠	HIGH TENSION TOWER	✳	TREE TO BE REMOVED
W.M.	WATER MAIN		DECIDUOUS TREE TO REMAIN
W.S.	WATER SERVICE	✳	EVERGREEN TREE TO REMAIN
G.M.	GAS MAIN	□	MONUMENT

PROPOSED

(TC92.00)	TOP OF CURB ELEVATION	(W)	WATER
(BC91.5)	BOTTOM OF CURB ELEVATION	(FS)	FIRE SERVICE
x(92.0)	SPOT ELEVATION	(WS)	WATER SERVICE
LP	LEACHING POOL	(E)	ELECTRIC
CB	CATCH BASIN	(G)	GAS
SMH	SANITARY MANHOLE	X	FENCE
DMH	DRAINAGE MANHOLE	(HC)	SANITARY HOUSE CONNECTION
(93)	CONTOUR	(D)	DRAINAGE
⊜	LEACHING POOL W/ OPEN GRATE	(RD)	ROOF DRAIN
○	LEACHING POOL W/ SOLID COVER	(T)	TELEPHONE
▣	DRAINAGE BASIN	(CATV)	TELEVISION
■	CATCH BASIN (TC ~ TOP OF CURB BOX)		CONCRETE WALK
	HYDRANT	/ / /	LIMIT OF CLEARING AND GRADING DURING CONSTRUCTION
⊕ PS	STREET TREE W / SYMBOL	▨	SAWCUT W/ PAVEMENT TO BE REMOVED
	PICKET RAIL FENCE	⊕	TEST HOLE
		▬ ▬ ▬	DRAINAGE RIDGELINE
		■	PROPOSED MONUMENT

FOR TOWN USE

No.	REVISION	DATE

OWNER
I.H.C.C., INC. AND
ROBERG REVOCABLE TRUST
21 BREEZE HILL ROAD
NORTHPORT, NY, 11768
(631) 261 - 5700

APPLICANT:
THE PRESERVE AT INDIAN HILLS
1 RABRO DRIVE, SUITE 100
HAUPPAUGE, N.Y. 11788
(631) 351 - 4000

GRADING PLAN 8
FOR
THE PRESERVE AT INDIAN HILLS
SITUATED AT
NORTHPORT
TOWN OF HUNTINGTON, SUFFOLK COUNTY, NEW YORK
S.C.T.M.: DISTRICT: 0400, SECT. 014, BLK. 04, LOTS 1 AND 2
DISTRICT 0400, SECT. 015, BLK. 01, LOTS 3.1, 3.2, 11, 12, 16, 19 AND P/O 22

THOMAS CHARLES DIXON
080916

NELSON + POPE
engineers • architects • surveyors
70 Maxess Road, Melville, NY 11747 • 631.427.5665 • nelsonpope.com

DRAWN BY: GEO	CADD No.: 86047 CSP 2021.DWG	SCALE: 1"=30'	DRAWING NO.: C - 112
CHECKED BY: JM	FILE NO.: 400-014		
DATE: OCTOBER, 2021	PROJECT NO.: 86047		SHEET NO.: 13 OF 44

IT IS A VIOLATION OF NEW YORK STATE EDUCATION LAW ARTICLE 145, PROFESSIONAL ENGINEERING AND LAND SURVEYING, SECTION 7209 FOR ANY PERSON, UNLESS HE IS ACTING UNDER THE DIRECTION OF A LICENSED PROFESSIONAL ENGINEER OR LAND SURVEYOR, TO ALTER AN ITEM IN ANY WAY. IF AN ITEM BEARING THE SEAL OF AN ENGINEER OR LAND SURVEYOR IS ALTERED, THE ALTERING ENGINEER OR LAND SURVEYOR SHALL AFFIX TO THE ITEM HIS SEAL AND NOTATION "ALTERED BY" FOLLOWED BY HIS SIGNATURE AND THE DATE OF SUCH ALTERATION, AND SPECIFIC DESCRIPTION OF THE ALTERATION.

G:\projects\86047\FINALS\CONDOMINIUM\86047 CSP 2021.dwg, 13 OF 44 GRADING PLAN 8, 10/11/2021 2:29:35 PM

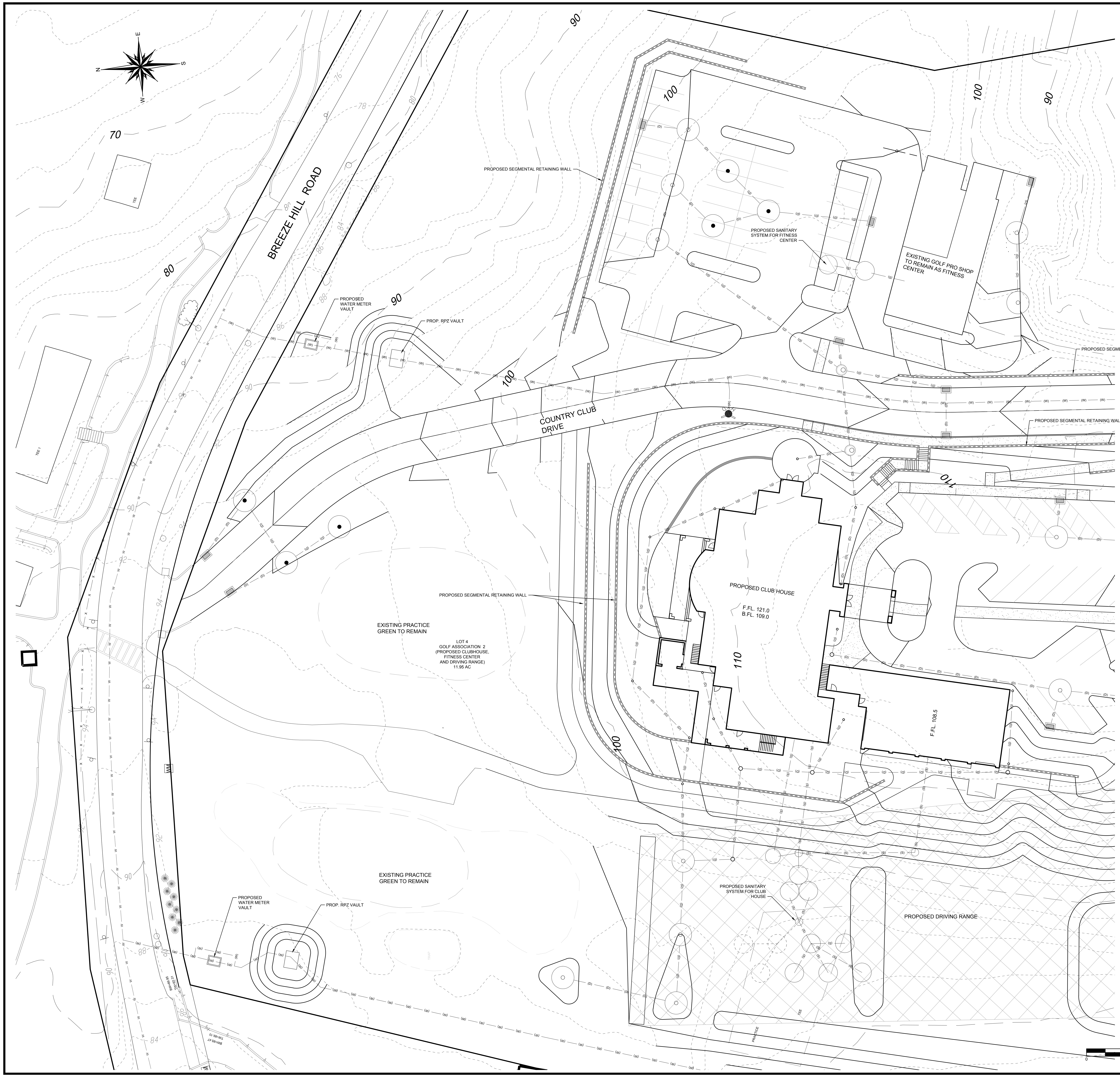
BREEZE HILL ROAD
COUNTRY CLUB DRIVE
70
80
90
100
110
PROPOSED SEGMENTAL RETAINING WALL
PROPOSED WATER METER VAULT
PROP. RPZ VAULT
PROPOSED SANITARY SYSTEM FOR FITNESS CENTER
EXISTING GOLF PRO SHOP TO REMAIN AS FITNESS CENTER
PROPOSED CLUB HOUSE
F.FL. 121.0
B.FL. 109.0
F.FL. 108.5
EXISTING PRACTICE GREEN TO REMAIN
LOT 4
GOLF ASSOCIATION 2
(PROPOSED CLUBHOUSE, FITNESS CENTER AND DRIVING RANGE)
11.95 AC
PROPOSED SANITARY SYSTEM FOR CLUB HOUSE
PROPOSED DRIVING RANGE
TEE
TEE 1
SCALE: 1" = 20'
0
20
40
60

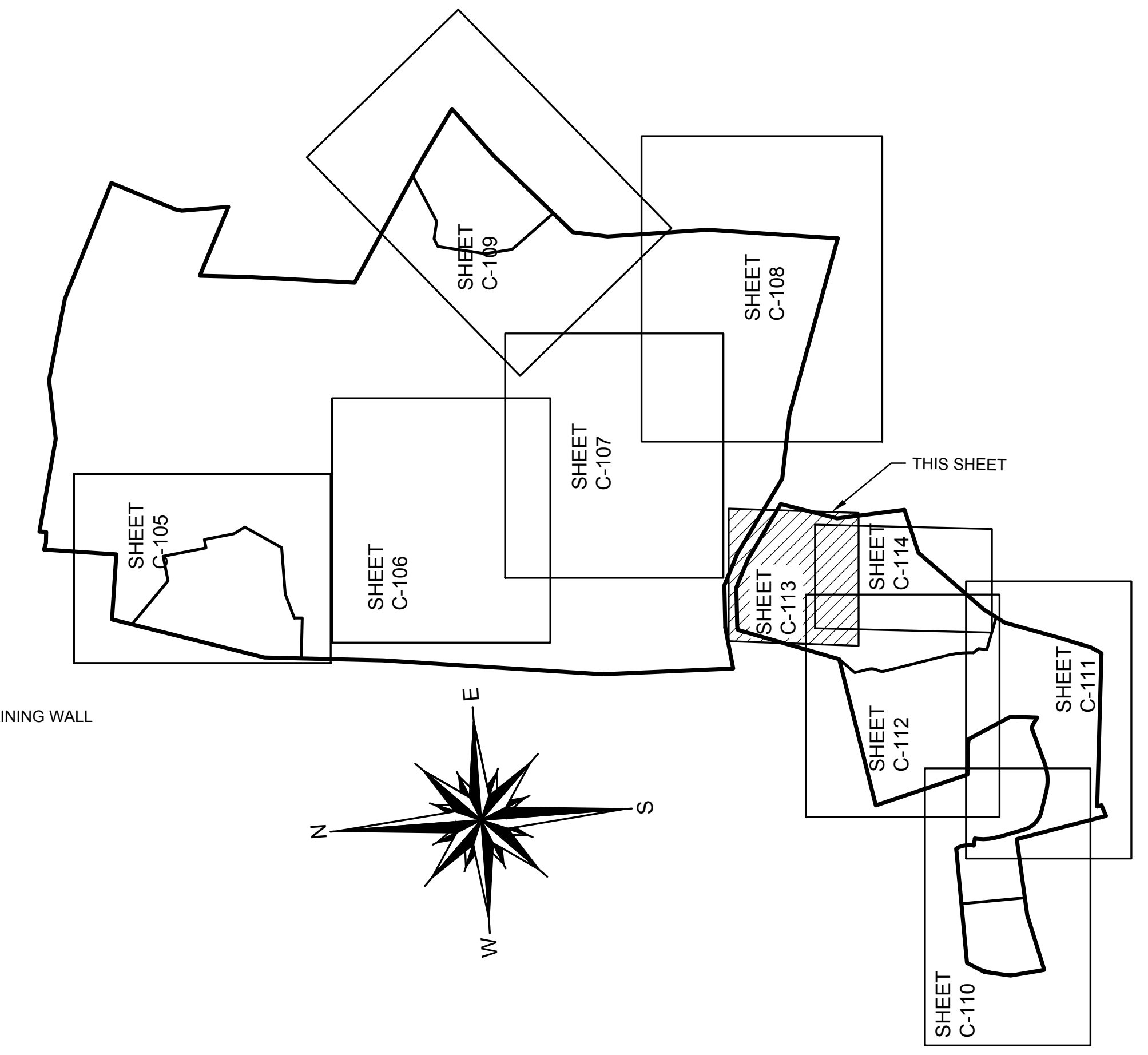
SHEET C-109
SHEET C-108
SHEET C-107
SHEET C-105
SHEET C-106
THIS SHEET
SHEET C-113
SHEET C-114
SHEET C-111
SHEET C-112
SHEET C-110
N
E
S
W

EXISTING

P92.59	PAVEMENT ELEVATION	94	CONTOUR
TC92.59	TOP OF CURB ELEVATION	E	ELECTRIC
BC92.2	BOTTOM OF CURB ELEVATION	W	WATER
X92.0	SPOT ELEVATION	G	GAS
☒	ELECTRIC BOX	X	FENCE
☒	PULL BOX	S	SANITARY SEWER
	FIRE HYDRANT	T	TELEPHONE
G	GAS VALVE	OHW	OVERHEAD WIRE
WV	WATER VALVE	D	DRAINAGE
T	TRANSFORMER	CATV	TELEVISION
	ELECTRIC POLE		DRAINAGE MANHOLE
✲	LIGHT POLE		CATCH BASINS
☒	HIGH TENSION TOWER		TREE TO BE REMOVED
W.M.	WATER MAIN		DECIDUOUS TREE TO REMAIN
W.S.	WATER SERVICE		EVERGREEN TREE TO REMAIN
G.M.	GAS MAIN	☐	MONUMENT

PROPOSED

(TC92.00)	TOP OF CURB ELEVATION	(W)	WATER
(BC91.5)	BOTTOM OF CURB ELEVATION	(FS)	FIRE SERVICE
x(92.0)	SPOT ELEVATION	(WS)	WATER SERVICE
LP	LEACHING POOL	(E)	ELECTRIC
CB	CATCH BASIN	(G)	GAS
SMH	SANITARY MANHOLE	X	FENCE
DMH	DRAINAGE MANHOLE	(HC)	SANITARY HOUSE CONNECTION
(93)	CONTOUR	(D)	DRAINAGE
	LEACHING POOL W/ OPEN GRATE	(RD)	ROOF DRAIN
	LEACHING POOL W/ SOLID COVER	(T)	TELEPHONE
▣	DRAINAGE BASIN	(CATV)	TELEVISION
■	CATCH BASIN (TC ~ TOP OF CURB BOX)		CONCRETE WALK
	HYDRANT	/ / /	LIMIT OF CLEARING AND GRADING DURING CONSTRUCTION
⊕ PS	STREET TREE W / SYMBOL	▨	SAWCUT W/ PAVEMENT TO BE REMOVED
	PICKET RAIL FENCE		TEST HOLE
			DRAINAGE RIDGELINE
		■	PROPOSED MONUMENT

FOR TOWN USE

No.	REVISION	DATE

OWNER
I.H.C.C., INC. AND
ROBERG REVOCABLE TRUST
21 BREEZE HILL ROAD
NORTHPORT, NY, 11768
(631) 261 - 5700

APPLICANT:
THE PRESERVE AT INDIAN HILLS
1 RABRO DRIVE, SUITE 100
HAUPPAUGE, N.Y. 11788
(631) 351 - 4000

GRADING PLAN 9
FOR
THE PRESERVE AT INDIAN HILLS
SITUATED AT
NORTHPORT
TOWN OF HUNTINGTON, SUFFOLK COUNTY, NEW YORK
S.C.T.M.: DISTRICT: 0400, SECT. 014, BLK. 04, LOTS 1 AND 2
DISTRICT 0400, SECT. 015, BLK. 01, LOTS 3.1, 3.2, 11, 12, 16, 19 AND P/O 22

THOMAS CHARLES DIXON

NELSON + POPE
engineers • architects • surveyors
70 Maxess Road, Melville, NY 11747 • 631.427.5665 • nelsonpope.com

DRAWN BY: GEO	CADD No.: 86047 CSP 2021.DWG	SCALE:	DRAWING NO.:
CHECKED BY: JM	FILE NO.: 400-014	1"=20'	C - 113
DATE: OCTOBER, 2021	PROJECT NO.: 86047		SHEET NO.: 14 OF 44

G:\projects\86047\FINALS\CONDOMINIUM\86047 CSP 2021.dwg, 14 OF 44 GRADING PLAN 9, 10/11/2021 2:30:31 PM

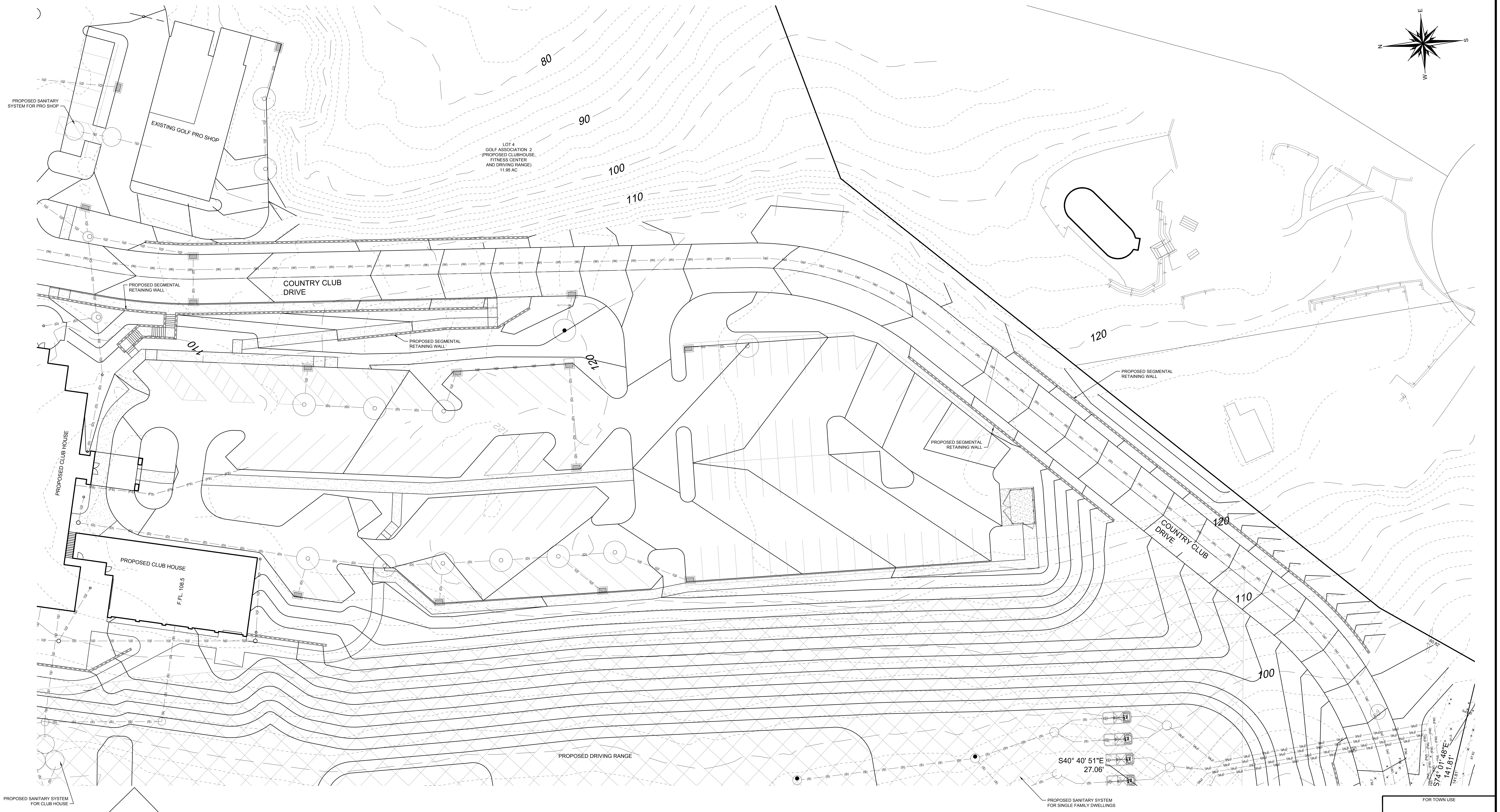

EXISTING GOLF PRO SHOP
PROPOSED SANITARY SYSTEM FOR PRO SHOP
LOT 4
GOLF ASSOCIATION 2
(PROPOSED CLUBHOUSE, FITNESS CENTER AND DRIVING RANGE)
11.95 AC
80
90
100
110
120
COUNTRY CLUB DRIVE
PROPOSED SEGMENTAL RETAINING WALL
PROPOSED SEGMENTAL RETAINING WALL
PROPOSED SEGMENTAL RETAINING WALL
PROPOSED SEGMENTAL RETAINING WALL
PROPOSED CLUB HOUSE
PROPOSED CLUB HOUSE
F.FL. 108.5
COUNTRY CLUB DRIVE
110
100
PROPOSED DRIVING RANGE
S40° 40' 51"E
27.06'
S74° 01' 48"E
141.81'
PROPOSED SANITARY SYSTEM FOR CLUB HOUSE
PROPOSED SANITARY SYSTEM FOR SINGLE FAMILY DWELLINGS
N
E
S
W

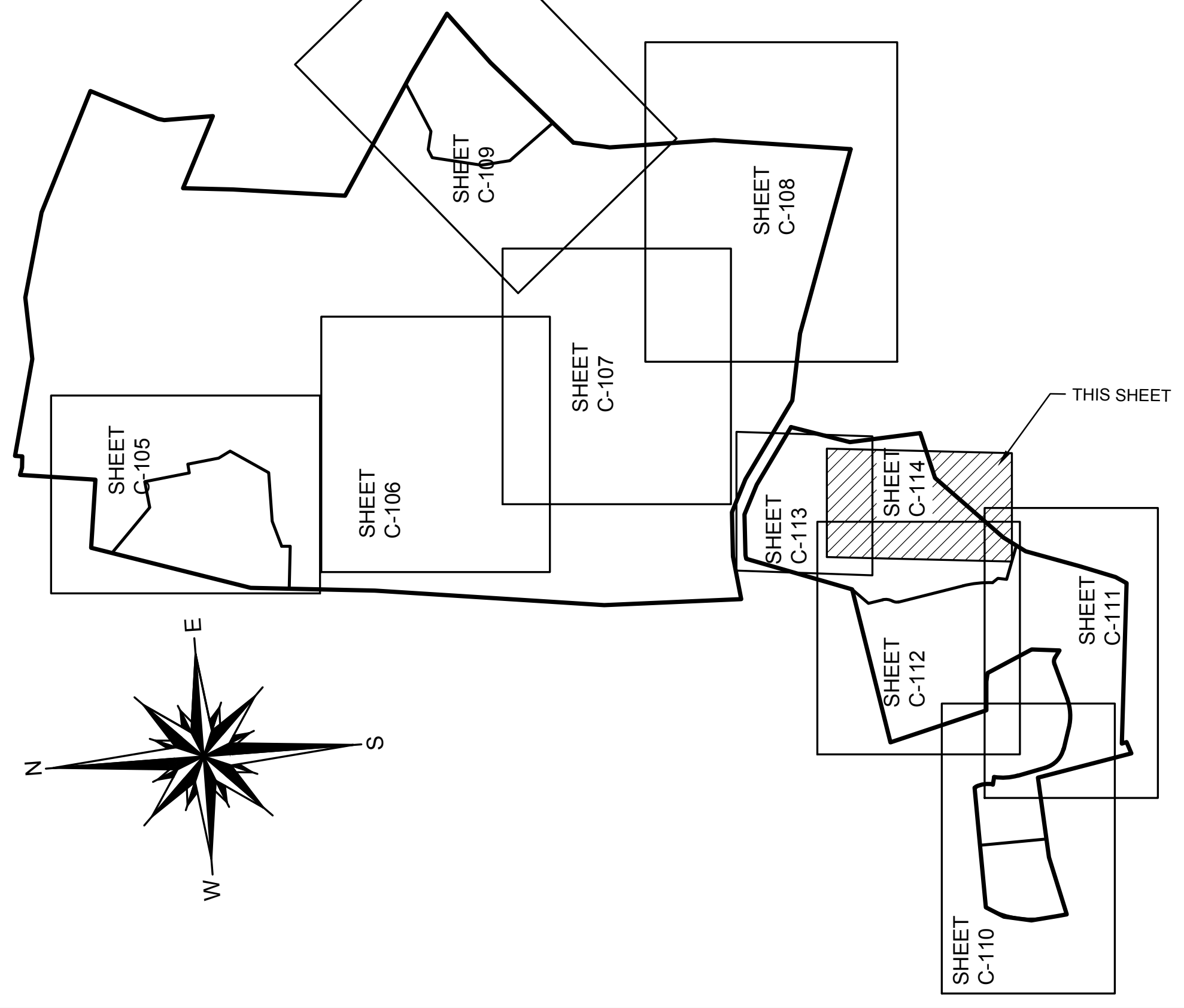

SHEET C-109
SHEET C-108
SHEET C-107
SHEET C-105
SHEET C-106
SHEET C-113
SHEET C-114
THIS SHEET
SHEET C-112
SHEET C-111
SHEET C-110
N
E
S
W

EXISTING

P92.59	PAVEMENT ELEVATION	---94---	CONTOUR
TC92.59	TOP OF CURB ELEVATION	— E —	ELECTRIC
BC92.2	BOTTOM OF CURB ELEVATION	— W —	WATER
x92.0	SPOT ELEVATION	— G —	GAS
⊠	ELECTRIC BOX	— X —	FENCE
⊠	PULL BOX	— S —	SANITARY SEWER
	FIRE HYDRANT	— T —	TELEPHONE
G	GAS VALVE	— OHW —	OVERHEAD WIRE
WV	WATER VALVE	— D —	DRAINAGE
T	TRANSFORMER	— CATV —	TELEVISION
	ELECTRIC POLE	◎	DRAINAGE MANHOLE
✡	LIGHT POLE	▦	CATCH BASINS
☒	HIGH TENSION TOWER	✷	TREE TO BE REMOVED
W.M.	WATER MAIN		DECIDUOUS TREE TO REMAIN
W.S.	WATER SERVICE	✷	EVERGREEN TREE TO REMAIN
G.M.	GAS MAIN	□	MONUMENT

PROPOSED

(TC92.00)	TOP OF CURB ELEVATION	— (W) —	WATER
(BC91.5)	BOTTOM OF CURB ELEVATION	— (FS) —	FIRE SERVICE
x(92.0)	SPOT ELEVATION	— (WS) —	WATER SERVICE
LP	LEACHING POOL	— (E) —	ELECTRIC
CB	CATCH BASIN	— (G) —	GAS
SMH	SANITARY MANHOLE	— X —	FENCE
DMH	DRAINAGE MANHOLE	— (HC) —	SANITARY HOUSE CONNECTION
(93)	CONTOUR	— (D) —	DRAINAGE
⊜	LEACHING POOL W/ OPEN GRATE	— (RD) —	ROOF DRAIN
○	LEACHING POOL W/ SOLID COVER	— (T) —	TELEPHONE
⊡	DRAINAGE BASIN	— (CATV) —	TELEVISION
■	CATCH BASIN (TC ~ TOP OF CURB BOX)	▨	CONCRETE WALK
	HYDRANT	/ — / — /	LIMIT OF CLEARING AND GRADING DURING CONSTRUCTION
⊕ PS	STREET TREE W / SYMBOL	▨	SAWCUT W/ PAVEMENT TO BE REMOVED
	PICKET RAIL FENCE	⊕	TEST HOLE
		— — —	DRAINAGE RIDGELINE
		■	PROPOSED MONUMENT

SCALE: 1" = 20'
0 20 40 60

FOR TOWN USE

No.	REVISION	DATE

OWNER
I.H.C.C., INC. AND
ROBERG REVOCABLE TRUST
21 BREEZE HILL ROAD
NORTHPORT, NY, 11768
(631) 261 - 5700

APPLICANT:
THE PRESERVE AT INDIAN HILLS
1 RABRO DRIVE, SUITE 100
HAUPPAUGE, N.Y. 11788
(631) 351 - 4000

GRADING PLAN 10
FOR
THE PRESERVE AT INDIAN HILLS
SITUATED AT
NORTHPORT
TOWN OF HUNTINGTON, SUFFOLK COUNTY, NEW YORK
S.C.T.M.: DISTRICT: 0400, SECT. 014, BLK. 04, LOTS 1 AND 2
DISTRICT 0400, SECT. 015, BLK. 01, LOTS 3.1, 3.2, 11, 12, 16, 19 AND P/O 22

THOMAS CHARLES DIXON

NELSON + POPE
engineers • architects • surveyors
70 Maxess Road, Melville, NY 11747 • 631.427.5665 • nelsonpope.com

DRAWN BY: GEO	CADD No.: 86047 CSP 2021.DWG	SCALE: 1"=20'
CHECKED BY: JM	FILE NO.: 400-014	DRAWING NO.: C - 114
DATE: OCTOBER, 2021	PROJECT NO.: 86047	SHEET NO.: 15 OF 44

G:\projects\86047\FINALS\CONDOMINIUM\86047 CSP 2021.dwg, 15 OF 44 GRADING PLAN 10, 10/11/2021 2:31:23 PM

LONG ISLAND SOUND
LONG ISLAND SOUND
N
E
S
W
LAND NOW OR FORMERLY OF INDIAN HILLS ESTATES (S.C.T.M. 400-14-1-11) ZONE: R-40 RES
MYSTIC LANE
CB 1 A TOP EL. = 72.00 INV. S = 68.00
37' - 18"∅ CPP @ 1.4%
PROPOSED RPZ
PROPOSED WATER METER
CB 1 A-1 TOP EL. = 72.50 INV. N = 67.50 INV. SE = 67.50
DB 1A TOP EL. = 73.00 INV. S = 70.50
189' - 18"∅ CPP @ 0.8%
MH 1A TOP EL. = 74.74 INV. NW = 66.00 INV. S = 66.00
LOT 1 THE PRESERVE AT INDIAN HILLS CONDOMINIUM 1 (24 UNITS) 5.77 AC
COASTAL EROSION HAZARD LINE
LAND NOW OR FORMERLY OF HENRY (S.C.T.M. 400-14-3-3) ZONE: R-40 RES
2' - 15"∅ CPP @ 1.1%
DB 2A TOP EL. = 71.50 INV. N = 69.50 INV. S = 69.50
74' - 15"∅ CPP @ 4.0%
DB 7A TOP EL. = 70.50 INV. N = 66.50 INV. SW = 66.50
DB 3A TOP EL. = 70.00 INV. NE = 66.00 INV. S = 66.00
90' - 15"∅ CPP @ 1.1%
DB 4A TOP EL. = 69.50 INV. N = 65.00 INV. S = 65.00
LAND NOW OR FORMERLY OF MAZZONI (S.C.T.M. 400-14-3-4) ZONE: R-40 RES
MH 3A TOP EL. = 68.36 INV. S = 56.10 INV. E = 60.35 INV. N = 60.85
89' - 15"∅ CPP @ 0.6%
DB 5A TOP EL. = 70.90 INV. N = 64.50 INV. SE = 64.50
52' - 15"∅ CPP @ 1.9%
LAND NOW OR FORMERLY OF KNOPP (S.C.T.M. 400-14-3-5) ZONE: R-40 RES
DB 6A TOP EL. = 67.50 INV. NW = 63.50 INV. SW = 63.50
57' - 15"∅ CPP @ 1.7%
DB 17A TOP EL. = 66.50 INV. NE = 62.50 INV. S = 62.50
140' - 18"∅ CPP @ 1.5%
122' - 15"∅ CPP @ 6.1%
LAND NOW OR FORMERLY OF JACOBS (S.C.T.M. 400-14-3-6) ZONE: R-40 RES
97' - 15"∅ CPP @ 1.0%
48' - 15"∅ CPP @ 1.0%
DB 14A TOP EL. = 59.00 INV. E = 55.00 INV. N = 55.00
DB 15A TOP EL. = 59.00 INV. W = 54.00 INV. N = 54.00
DB 16A TOP EL. = 59.00 INV. S = 53.50 INV. E = 53.50
LAND NOW OR FORMERLY OF SPEN (S.C.T.M. 400-14-3-7) ZONE: R-40 RES
LOOKOUT RIDGE
F.FL. 77.5 B.FL. 67.5 GAR. FL. 76.8
F.FL. 74.0 B.FL. 64.0 GAR. FL. 73.3
F.FL. 72.9 B.FL. 61.9 GAR. FL. 72.2
F.FL. 72.5 B.FL. 62.5 GAR. FL. 71.8
GAR. FL. 70.3 F.FL. 71.0 B.FL. 61.0
GAR. FL. 70.3 F.FL. 71.0 B.FL. 61.0
GAR. FL. 68.0 F.FL. 68.7 B.FL. 58.7
GAR. FL. 68.3 F.FL. 69.0 B.FL. 59.0
F.FL. 76.5 B.FL. 66.5 GAR. FL. 75.8
F.FL. 75.0 B.FL. 65.0 GAR. FL. 74.3
F.FL. 70.0 B.FL. 60.0 GAR. FL. 69.3
GAR. FL. 69.3 F.FL. 70.0 B.FL. 60.0
195' - 18"∅ CPP @ 2.0%
4+82.68
0+00 = 4+86.52
MH 2A TOP EL. = 70.85 INV. N = 62.10 INV. S = 62.10
123' - 18"∅ CPP @ 1.0%
85' - 18"∅ CPP @ 1.5%
CB 3A TOP EL. = 66.38 INV. S = 61.60 INV. W = 61.60
26' - 18"∅ CPP @ 1.5%
DB 9A TOP EL. = 72.00 INV. S = 67.00
91' - 15"∅ CPP @ 1.1%
DB 10A TOP EL. = 71.00 INV. N = 66.00 INV. S = 66.00
92' - 15"∅ CPP @ 3.2%
DB 11A TOP EL. = 68.00 INV. N = 63.00 INV. E = 63.00
35' - 15"∅ CPP @ 1.4%
DB 12A TOP EL. = 67.50 INV. W = 62.50 INV. S = 62.50
91' - 15"∅ CPP @ 1.6%
DB 13A TOP EL. = 66.00 INV. N = 61.00 INV. SE = 61.00
64' - 15"∅ CPP @ 3.1%
MH 15A TOP EL. = 64.00 INV. NW = 59.00 INV. SW = 43.20
156' - 15"∅ CPP @ 1.4%
CB 2A TOP EL. = 66.38 INV. N = 62.00
73' - 24"∅ CPP @ 1.6%
MH 4A TOP EL. = 44.00 INV. NW = 39.30 INV. E = 38.65
59' - 24"∅ CPP @ 1.9%
FES 1 TOP EL. = 41.17 INV. W = 37.50
DEPRESSION A H.W. 43.5 BOTTOM 37.00
FES 2 TOP EL. = 40.17 INV. S = 38.00
167' - 24"∅ CPP
MH 13A TOP EL. = 59.00 INV. E = 51.20 INV. W = 51.20
89' - 18"∅ CPP @ 1.1%
MH 12A TOP EL. = 63.22 INV. E = 52.20 INV. SW = 52.20 INV. N = 54.00
93' - 18"∅ CPP @ 1.1%
26' - 15"∅ CPP @ 1.2%
MH 14A TOP EL. = 59.00 INV. E = 41.50 INV. W = 50.20
29' - 18"∅ CPP @ 1.7%
DB 8A TOP EL. = 59.80 INV. W = 52.50 INV. NE = 52.50
76' - 15"∅ CPP @ 1.3%
MH 11A TOP EL. = 46.50 INV. W = 41.00 INV. SE = 40.50 INV. NE = 41.00
LOT 3 GOLF ASSOCIATION 1 (EXISTING GOLF COURSE) 115.72 AC
LAND NOW OR FORMERLY OF INDIAN HEAD BLUFF LLC (S.C.T.M. 400-14-6-36) ZONE: R-40 RES
COASTAL EROSION HAZARD LINE
LAND NOW OR FORMERLY OF ZACHER (S.C.T.M. 400-14-4-10) ZONE: R-40 RES
LAND NOW OR FORMERLY OF INDIAN HEAD BLUFF LLC (S.C.T.M. 400-14-6-37) ZONE: R-40 RES
LAND NOW OR FORMERLY OF ZACHER (S.C.T.M. 400-14-4-3) ZONE: R-40 RES
COUSINS STREET
THORNTON DRIVE
LAND NOW OR FORMERLY OF C & R HOMES, INC (S.C.T.M. 400-14-4-4.2) ZONE: R-40 RES
LAND NOW OR FORMERLY OF AUGUSTINE (S.C.T.M. 400-14-4-4.1) ZONE: R-40 RES
LAND NOW OR FORMERLY OF GUAN (S.C.T.M. 400-14-4-5) ZONE: R-40 RES
THORNTON DRIVE
CLAYMORE ROAD

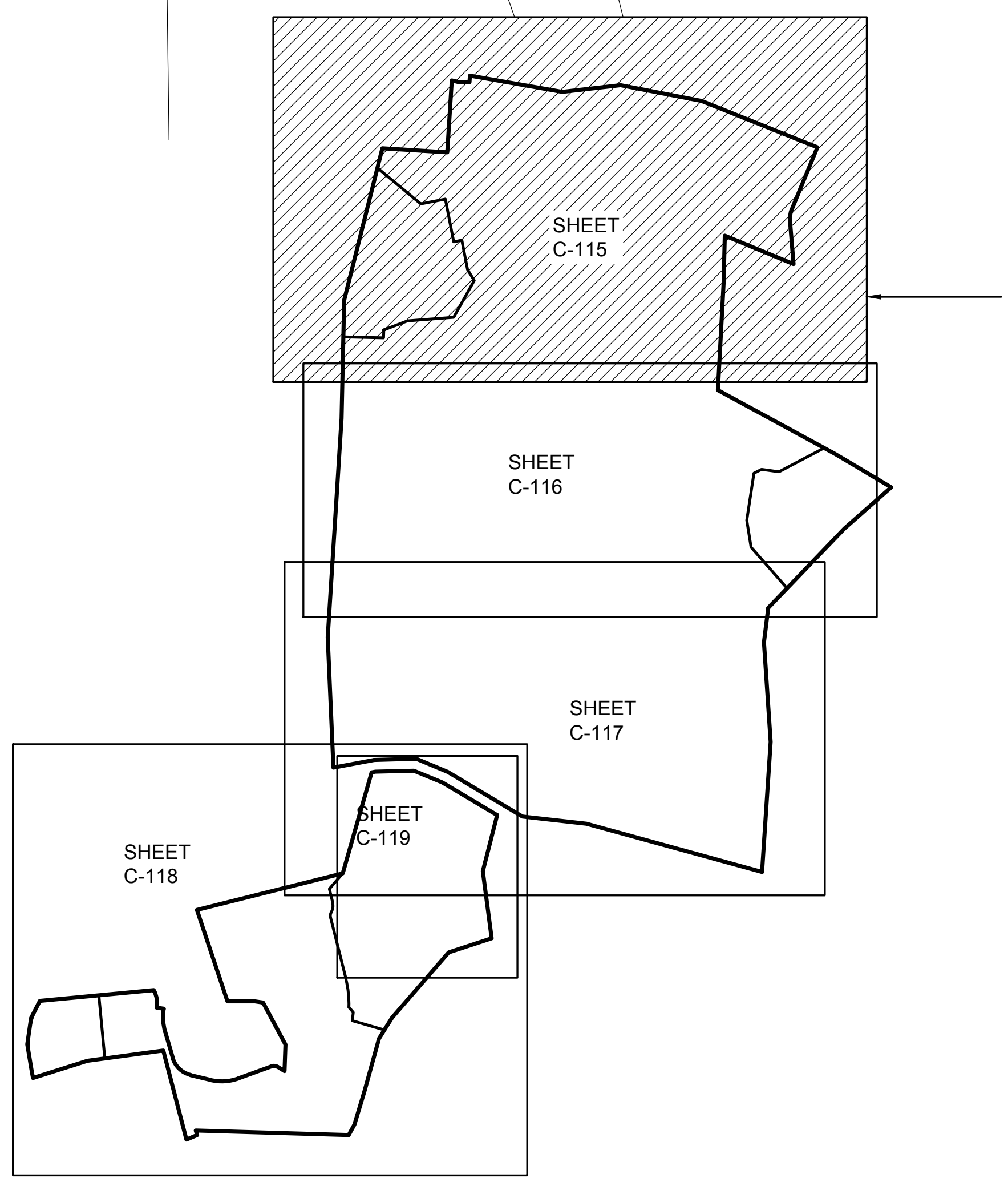
SHEET C-115
THIS SHEET
SHEET C-116
SHEET C-117
SHEET C-118
SHEET C-119

EXISTING

P92.59	PAVEMENT ELEVATION	·····94·····	CONTOUR
TC92.59	TOP OF CURB ELEVATION	—— E ——	ELECTRIC
BC92.2	BOTTOM OF CURB ELEVATION	—— W ——	WATER
X92.0	SPOT ELEVATION	—— G ——	GAS
☒	ELECTRIC BOX	—— X ——	FENCE
☒	PULL BOX	—— S ——	SANITARY SEWER
	FIRE HYDRANT	—— T ——	TELEPHONE
G	GAS VALVE	—— OHW ——	OVERHEAD WIRE
WV	WATER VALVE	—— D ——	DRAINAGE
T	TRANSFORMER	—— CATV ——	TELEVISION
	ELECTRIC POLE	◎	DRAINAGE MANHOLE
✲	LIGHT POLE	▦	CATCH BASINS
☒	HIGH TENSION TOWER		TREE TO BE REMOVED
W.M.	WATER MAIN		TREE TO REMAIN
W.S.	WATER SERVICE		
G.M.	GAS MAIN	☐	MONUMENT

PROPOSED

(TC92.00)	TOP OF CURB ELEVATION	—— (W) ——	WATER
(BC91.5)	BOTTOM OF CURB ELEVATION	—— (FS) ——	FIRE SERVICE
x(92.0)	SPOT ELEVATION	—— (WS) ——	WATER SERVICE
LP	LEACHING POOL	—— (E) ——	ELECTRIC
CB	CATCH BASIN	—— (G) ——	GAS
SMH	SANITARY MANHOLE	—— X ——	FENCE
DMH	DRAINAGE MANHOLE	—— (HC) ——	SANITARY HOUSE CONNECTION
(93)	CONTOUR	—— (D) ——	DRAINAGE
⊜	LEACHING POOL W/ OPEN GRATE	—— (RD) ——	ROOF DRAIN
○	LEACHING POOL W/ SOLID COVER	—— (T) ——	TELEPHONE
▣	DRAINAGE BASIN	—— (CATV) ——	TELEVISION
■	CATCH BASIN (TC ~ TOP OF CURB BOX)	▨	CONCRETE WALK
	HYDRANT	/ —— / —— /	LIMIT OF CLEARING AND GRADING DURING CONSTRUCTION
⊕ PS	STREET TREE W / SYMBOL	▨	SAWCUT W/ PAVEMENT TO BE REMOVED
		◐	TEST HOLE
		▬ ▬ ▬	DRAINAGE RIDGELINE
		■	PROPOSED MONUMENT

IT IS A VIOLATION OF NEW YORK STATE EDUCATION LAW ARTICLE 145, PROFESSIONAL ENGINEERING AND LAND SURVEYING, SECTION 7209 FOR ANY PERSON, UNLESS HE IS ACTING UNDER THE DIRECTION OF A LICENSED PROFESSIONAL ENGINEER OR LAND SURVEYOR, TO ALTER AN ITEM IN ANY WAY. IF AN ITEM BEARING THE SEAL OF AN ENGINEER OR LAND SURVEYOR IS ALTERED, THE ALTERING ENGINEER OR LAND SURVEYOR SHALL AFFIX TO THE ITEM HIS SEAL AND NOTATION "ALTERED BY" FOLLOWED BY HIS SIGNATURE AND THE DATE OF SUCH ALTERATION, AND SPECIFIC DESCRIPTION OF THE ALTERATION.

SCALE: 1" = 60'

0 30 60 100 200

FOR TOWN USE

No.	REVISION	DATE

OWNER
I.H.C.C., INC. AND
ROBERG REVOCABLE TRUST
21 BREEZE HILL ROAD
NORTHPORT, NY, 11768
(631) 261 - 5700

APPLICANT:
THE PRESERVE AT INDIAN HILLS
1 RABRO DRIVE, SUITE 100
HAUPPAUGE, N.Y. 11788
(631) 351 - 4000

UTILITY PLAN 1
FOR
THE PRESERVE AT INDIAN HILLS
SITUATED AT
NORTHPORT
TOWN OF HUNTINGTON, SUFFOLK COUNTY, NEW YORK
S.C.T.M.: DISTRICT: 0400, SECT. 014, BLK. 04, LOTS 1 AND 2
DISTRICT 0400, SECT. 015, BLK. 01, LOTS 3.1, 3.2, 11, 12, 16, 19 AND P/O 22

THOMAS CHARLES DIXON
LICENSED PROFESSIONAL ENGINEER

NELSON + POPE
engineers • architects • surveyors
70 Maxess Road, Melville, NY 11747 • 631.427.5665 • nelsonpope.com

DRAWN BY: GEO	CADD No. 86047 CSP 2021.DWG	SCALE:	1"=60'	DRAWING NO.: C - 115
CHECKED BY: JM	FILE NO.: 400-014			
DATE: OCTOBER, 2021	PROJECT NO.: 86047			SHEET NO.: 16 OF 44

G:\projects\86047\FINALS\CONDOMINIUM\86047 CSP 2021.dwg, 16 OF 44 UTILTIY PLAN 1, 10/11/2021 2:32:17 PM

DB 17A
'OP EL. = 66.50
NV. NE = 62.50
INV. S = 62.50
8"Ø CPP @ 1.5%
15"Ø CPP @ 6.1%
TRAIL
9
10
11
12
5
6
7
8
LAND NOW OR FORMERLY OF JACOBS (S.C.T.M. 400-14-3-6) ZONE: R-40 RES
97' - 15"Ø CPP @ 1.0%
48' - 15"Ø CPP @ 1.0%
DB 14A
TOP EL. = 59.00
INV. E = 55.00
INV. N = 55.00
DB 15A
TOP EL. = 59.00
INV. W = 54.00
INV. N = 54.00
DB 16A
TOP EL. = 59.00
INV. S = 53.50
INV. E = 53.50
CB 2A
TOP EL. = 66.38
INV. N = 62.00
MH 13A
TOP EL. = 59.00
INV. E = 51.20
INV. W = 51.20
89' - 18"Ø CPP @ 1.1%
MH 12A
TOP EL. = 63.22
INV. E = 52.20
INV. SW = 52.20
INV. N = 54.00
26' - 15"Ø CPP @ 1.2%
DB 8A
TOP EL. = 59.80
INV. W = 52.50
INV. NE = 52.50
76' - 15"Ø CPP @ 1.3%
93' - 18"Ø CPP @ 1.1%
MH 14A
TOP EL. = 59.00
INV. E = 41.50
INV. W = 50.20
29' - 18"Ø CPP @ 1.7%
MH 11A
TOP EL. = 46.50
INV. W = 41.00
INV. SE = 40.50
INV. NE = 41.00
SANITARY SYSTEM FOR DWELLING UNITS
73' - 24"Ø CPP @ 1.6%
MH 4A
TOP EL. = 44.00
INV. NW = 39.30
INV. E = 38.65
59' - 24"Ø CPP @ 1.9%
FES 1
TOP EL. = 41.17
INV. W = 37.50
DEPRESSION A
H.W. 43.5
BOTTOM 37.00
FES 2
TOP EL. = 40.17
INV. S = 38.00
167' - 24"Ø CPP @ 0.3%
FES 3
TOP EL. = 39.67
INV. N = 37.50
DEPRESSION AA
H.W. 43.50
BOTTOM 37.00
OVERFLOW STRAUCTURE 1
TOP EL. = 43.50
3" ORIFICE 38.00
8" ORIFICE 39.40
INV. SW = 35.60
224' - 24"Ø CPP @ 0.72%
FES 4
TOP EL. = 36.67
INV. NE = 34.00
LOT 3
GOLF ASSOCIATION 1
(EXISTING GOLF COURSE)
115.72 AC
LAND NOW OR FORMERLY OF SPEN (S.C.T.M. 400-14-3-7) ZONE: R-40 RES
LAND NOW OR FORMERLY OF GIMENEZ (S.C.T.M. 400-14-3-8) ZONE: R-40 RES
LAND NOW OR FORMERLY OF POLLICINO (S.C.T.M. 400-14-3-9) ZONE: R-40 RES
LAND NOW OR FORMERLY OF IOPPOLO (S.C.T.M. 400-14-3-10) ZONE: R-40 RES
LAND NOW OR FORMERLY OF CALFA (S.C.T.M. 400-14-3-11) ZONE: R-40 RES
LAND NOW OR FORMERLY OF C & R HOMES, INC (S.C.T.M. 400-14-4-4.2) ZONE: R-40 RES
THORNTON DRIVE
N
W
E
S
LAND NOW OR FORMERLY OF AUGUSTINE (S.C.T.M. 400-14-4-4.1) ZONE: R-40 RES
LAND NOW OR FORMERLY OF GUAN (S.C.T.M. 400-14-4-5) ZONE: R-40 RES
THORNTON DRIVE
CLAYMORE ROAD
LAND NOW OR FORMERLY OF RAPIEJKO (S.C.T.M. 400-14-4-6) ZONE: R-40 RES
LAND NOW OR FORMERLY OF GRAZIANO (S.C.T.M. 400-14-4-7) ZONE: R-40 RES
LAND NOW OR FORMERLY OF BORDEN (S.C.T.M. 400-14-4-8) ZONE: R-40 RES
LAND NOW OR FORMERLY OF BORDEN (S.C.T.M. 400-14-4-9) ZONE: R-40 RES
76' - 18"Ø CPP @ 3.95%
DB 11 E
TOP EL. = 24.00
INV. S = 19.00
INV. W = 19.00
DB 11 F
TOP EL. = 31.50
INV. E = 22.00
81' - 18"Ø CPP @ 5.52%
DB 13 E
TOP EL. = 29.30
INV. S = 24.30
EFFLUENT TREATMENT PROCESSOR
SANITARY SYSTEM FOR DWELLING UNITS
LEACHING POOLS
50% EXPANSION LEACHING POOLS
94' - 15"Ø CPP @ 7.02%
DB 13 D
TOP EL. = 22.70
INV. N = 17.70
INV. S = 17.70
94' - 15"Ø CPP @ 2.13%
DB 13 C
TOP EL. = 21.70
INV. N = 15.70
INV. S = 14.70
65' - 15"Ø CPP @ 1.07%
DB 13 B
TOP EL. = 18.50
INV. S = 14.00
INV. N = 14.00
34' - 15"Ø CPP @ 2.91%
DB 13 A
TOP EL. = 15.20
INV. N = 13.00
INV. SE = 10.00
145' - 15"Ø CPP @ 1.37%
END SECTION 13
TOP EL. = 9.92
INV. NW = 8.00
OVERLOOK PATH
25
26
27
28
29
30
31
32
33
34
35
36
37
38
13
14
15
16
17
18
19
DB 11 D
TOP EL. = 21.00
INV. N = 14.50
INV. SW = 14.50
23' - 18"Ø CPP @ 2.20%
PROPOSED RPZ
DB 11 C
TOP EL. = 21.00
INV. NE = 14.00
INV. S = 14.00
71' - 18"Ø CPP @ 1.41%
DB 11 B
TOP EL. = 21.00
INV. N = 13.00
INV. SW = 13.00
47' - 18"Ø CPP @ 2.12%
DEPRESSION H.W. 12.0 BOTTOM 8.0 53,700 CF STORAGE
FRESH POND ROAD
DB 11 A
TOP EL. = 17.00
INV. NE = 12.00
INV. S = 12.00
60' - 18"Ø CPP @ 7.37%
END SECTION 11
TOP EL. = 10.17
INV. SW = 8.00
50' - 18"Ø CPP @ 1.11%
MH 11A
TOP EL. = 15.00
INV. SW = 7.55
INV. NE = 7.55
INV. N = 7.55
LP 11 A
GR EL. = 14.50
H.W. EL. = 11.50
BOTTOM EL. = 5.50
8 Ø SLAB TOP LP - 6.0 FT ED
INV. SW = 6.50
INV. NE = 7.00
CB 11 A
GR EL. = 10.40
INV. SW = 7.90
14' - 18"Ø CPP @ 6.17%
CB 11
TOP EL. = 11.98
INV. SW = 7.00
INV. NE = 7.34
83' - 15"Ø CPP @ 0.84%
12' - 15"Ø CPP @ 1.66%
20' - 18"Ø CPP @ 2.44%
LC 1
TOP EL. = 12.20
INV. E = 7.00
CB 12
TOP EL. = 11.98
INV. NE = 7.50
INV. S = 7.50
57' - 18"Ø CPP @ 0.88%
CB 12 A
GR EL. = 11.30
INV. NE = 7.20
INV. W = 7.20
DEPRESSION H.W. 12.0 BOTTOM 8.0 22,300 CF STORAGE
65' - 18"Ø CPP @ 1.53%
LP 12 A
GR EL. = 14.00
H.W. EL. = 11.00
BOTTOM EL. = 5.00
8 Ø SLAB TOP LP - 6.0 FT ED
INV. N = 7.00
INV. SW = 7.00
END SECTION 12
TOP EL. = 10.17
INV. NE = 8.00
1+00
2+00
4+00
5+00
0+00
SHEET C-115
SHEET C-116
THIS SHEET
SHEET C-117
SHEET C-118
SHEET C-119

FOR TOWN USE

PROPOSED

(TC92.00)	TOP OF CURB ELEVATION
(BC91.5)	BOTTOM OF CURB ELEVATION
x(92.0)	SPOT ELEVATION
LP	LEACHING POOL
CB	CATCH BASIN
SMH	SANITARY MANHOLE
DMH	DRAINAGE MANHOLE
(93)	CONTOUR
⊜	LEACHING POOL W/ OPEN GRATE
○	LEACHING POOL W/ SOLID COVER
▣	DRAINAGE BASIN
■	CATCH BASIN (TC ~ TOP OF CURB BOX)
	HYDRANT
⊕ PS	STREET TREE W / SYMBOL

(W)	WATER
(FS)	FIRE SERVICE
(WS)	WATER SERVICE
(E)	ELECTRIC
(G)	GAS
X	FENCE
(HC)	SANITARY HOUSE CONNECTION
(D)	DRAINAGE
(RD)	ROOF DRAIN
(T)	TELEPHONE
(CATV)	TELEVISION
	CONCRETE WALK
/ / /	LIMIT OF CLEARING AND GRADING DURING CONSTRUCTION
▨	SAWCUT W/ PAVEMENT TO BE REMOVED
	TEST HOLE
▬ ▬ ▬	DRAINAGE RIDGELINE
■	PROPOSED MONUMENT

EXISTING

P92.59	PAVEMENT ELEVATION
TC92.59	TOP OF CURB ELEVATION
BC92.2	BOTTOM OF CURB ELEVATION
X92.0	SPOT ELEVATION
94	CONTOUR
E	ELECTRIC
W	WATER
G	

W.M.	WATER MAIN
W.S.	WATER SERVICE
G.M.	GAS MAIN
	TREE TO REMAIN
□	MONUMENT

IT IS A VIOLATION OF NEW YORK STATE EDUCATION LAW ARTICLE 145, PROFESSIONAL ENGINEERING AND LAND SURVEYING, SECTION 7209 FOR ANY PERSON, UNLESS HE IS ACTING UNDER THE DIRECTION OF A LICENSED PROFESSIONAL ENGINEER OR LAND SURVEYOR, TO ALTER AN ITEM IN ANY WAY. IF AN ITEM BEARING THE SEAL OF AN ENGINEER OR LAND SURVEYOR IS ALTERED, THE ALTERING ENGINEER OR LAND SURVEYOR SHALL AFFIX TO THE ITEM HIS SEAL AND NOTATION "ALTERED BY" FOLLOWED BY HIS SIGNATURE AND THE DATE OF SUCH ALTERATION, AND SPECIFIC DESCRIPTION OF THE ALTERATION.

SCALE: 1" = 60'
0 30 60 100 200

No.	REVISION	DATE

OWNER
I.H.C.C., INC. AND
ROBERG REVOCABLE TRUST
21 BREEZE HILL ROAD
NORTHPORT, NY, 11768
(631) 261 - 5700

APPLICANT:
THE PRESERVE AT INDIAN HILLS
1 RABRO DRIVE, SUITE 100
HAUPPAUGE, N.Y. 11788
(631) 351 - 4000

UTILITY PLAN 2
FOR
THE PRESERVE AT INDIAN HILLS
SITUATED AT
NORTHPORT
TOWN OF HUNTINGTON, SUFFOLK COUNTY, NEW YORK
S.C.T.M.: DISTRICT: 0400, SECT. 014, BLK. 04, LOTS 1 AND 2
DISTRICT 0400, SECT. 015, BLK. 01, LOTS 3.1, 3.2, 11, 12, 16, 19 AND P/O 22

THOMAS CHARLES DIXON

NELSON + POPE
engineers • architects • surveyors
70 Maxess Road, Melville, NY 11747 • 631.427.5665 • nelsonpope.com

DRAWN BY: GEO	CADD No.: 86047 CSP 2021.DWG	SCALE: 1"=60'	DRAWING NO.: C - 116
CHECKED BY: JM	FILE NO.: 400-014		
DATE: OCTOBER, 2021	PROJECT NO.: 86047		SHEET NO.: 17 OF 44

G:\projects\86047\FINALS\CONDOMINIUM\86047 CSP 2021.dwg, 17 OF 44 UTILITY PLAN 2, 10/11/2021 2:32:32 PM

LAND NOW OR FORMERLY OF
DEPTULA
(S.C.T.M. 400-14-3-12)
ZONE: R-40 RES
LAND NOW OR FORMERLY OF
CORDTS
(S.C.T.M. 400-14-3-13)
ZONE: R-40 RES
LAND NOW OR FORMERLY OF
ZAGAJESKI
(S.C.T.M. 400-14-3-14)
ZONE: R-40 RES
LAND NOW OR FORMERLY OF
MONTIGLIO
(S.C.T.M. 400-14-3-26)
ZONE: R-40 RES
BREEZE HILL ROAD
PROPOSED WATER METER
PROPOSED RPZ
LOT 4
GOLF ASSOCIATION 2
(PROPOSED CLUBHOUSE, FITNESS CENTER AND DRIVING RANGE)
11.95 AC
COUNTRY CLUB DRIVE
APPROXIMATE LOCATION OF PROPOSED CLUBHOUSE
LAND NOW OR FORMERLY OF
IZZO
(S.C.T.M. 400-15-1-10)
ZONE: R-40 RES
LAND NOW OR FORMERLY OF
MONTIGLIO
(S.C.T.M. 400-15-1-9)
ZONE: R-40 RES
CB 10
GR EL. = 76.12
INV. E = 70.43
INV. W = 70.43
F.FL. 121.0
B.FL. 109.0
F.FL. 108.5
PROPOSED WATER METER
PROPOSED RPZ
LAND NOW OR FORMERLY OF
TRUTESCU
(S.C.T.M. 400-15-2-1)
ZONE: R-40 RES
BREEZE HILL ROAD
LOT 3
GOLF ASSOCIATION 1
(EXISTING GOLF COURSE)
115.72 AC
PROPOSED TEE
DEPRES
H.W. 12.0
BOTTOM 8.0
22,300 CF STO
115.21'
N
E
S
W
FRESH POND ROAD

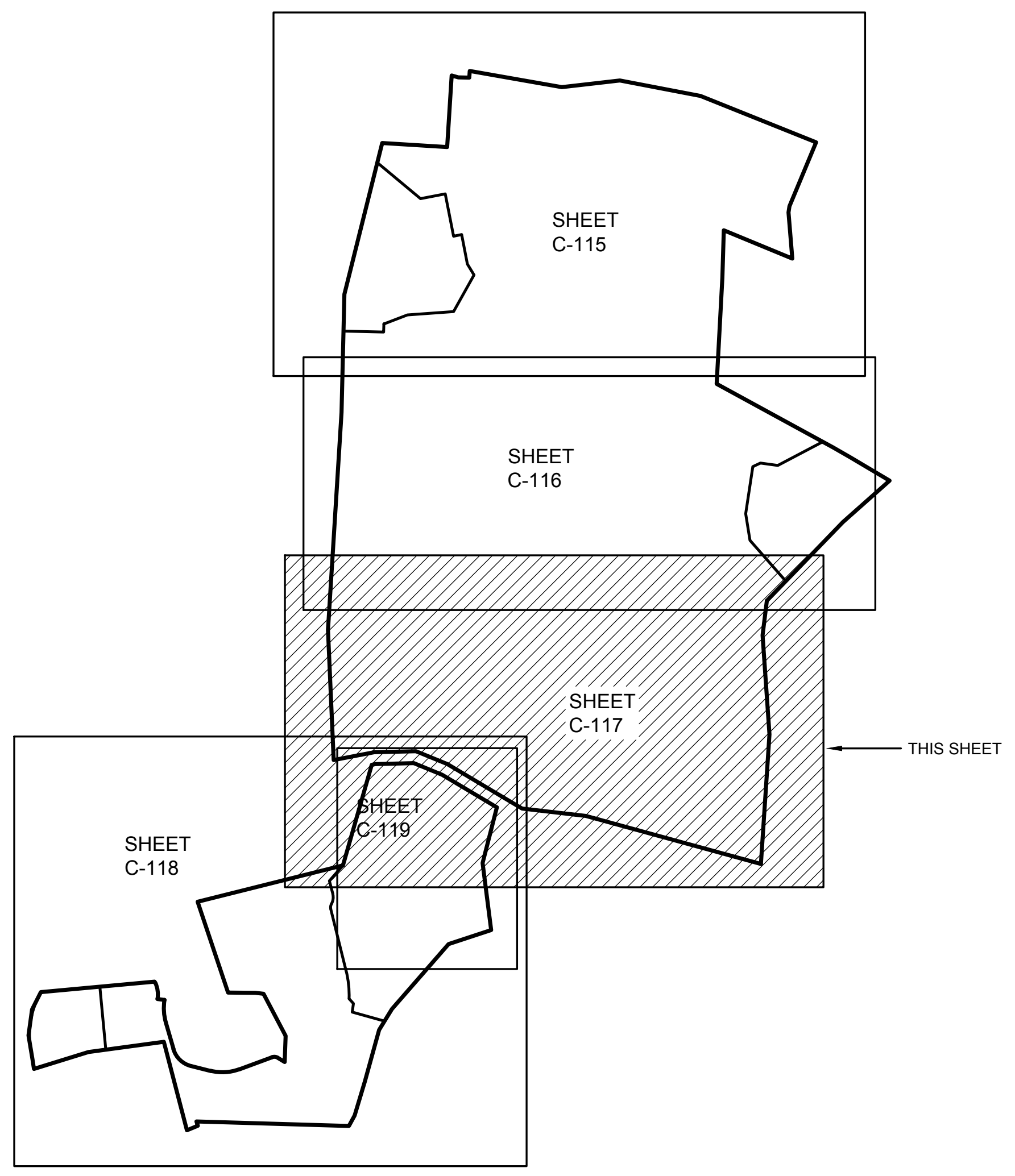
SHEET C-115
SHEET C-116
SHEET C-117
SHEET C-118
SHEET C-119
THIS SHEET

EXISTING

P92.59	PAVEMENT ELEVATION	94	CONTOUR
TC92.59	TOP OF CURB ELEVATION	E	ELECTRIC
BC92.2	BOTTOM OF CURB ELEVATION	W	WATER
X92.0	SPOT ELEVATION	G	GAS
⊠	ELECTRIC BOX	X	FENCE
⊠	PULL BOX	S	SANITARY SEWER
	FIRE HYDRANT	T	TELEPHONE
G	GAS VALVE	OHW	OVERHEAD WIRE
WV	WATER VALVE	D	DRAINAGE
T	TRANSFORMER	CATV	TELEVISION
	ELECTRIC POLE		DRAINAGE MANHOLE
	LIGHT POLE		CATCH BASINS
☒	HIGH TENSION TOWER		TREE TO BE REMOVED
W.M.	WATER MAIN		TREE TO REMAIN
W.S.	WATER SERVICE	☐	MONUMENT
G.M.	GAS MAIN		

PROPOSED

(TC92.00)	TOP OF CURB ELEVATION	(W)	WATER
(BC91.5)	BOTTOM OF CURB ELEVATION	(FS)	FIRE SERVICE
x(92.0)	SPOT ELEVATION	(WS)	WATER SERVICE
LP	LEACHING POOL	(E)	ELECTRIC
CB	CATCH BASIN	(G)	GAS
SMH	SANITARY MANHOLE	X	FENCE
DMH	DRAINAGE MANHOLE	(HC)	SANITARY HOUSE CONNECTION
(93)	CONTOUR	(D)	DRAINAGE
◎	LEACHING POOL W/ OPEN GRATE	(RD)	ROOF DRAIN
○	LEACHING POOL W/ SOLID COVER	(T)	TELEPHONE
▣	DRAINAGE BASIN	(CATV)	TELEVISION
■	CATCH BASIN (TC ~ TOP OF CURB BOX)	▨	CONCRETE WALK
	HYDRANT	/ /	LIMIT OF CLEARING AND GRADING DURING CONSTRUCTION
⊕ PS	STREET TREE W / SYMBOL	▨	SAWCUT W/ PAVEMENT TO BE REMOVED
			TEST HOLE
			DRAINAGE RIDGELINE
		■	PROPOSED MONUMENT

IT IS A VIOLATION OF NEW YORK STATE EDUCATION LAW ARTICLE 145, PROFESSIONAL ENGINEERING AND LAND SURVEYING, SECTION 7209 FOR ANY PERSON, UNLESS HE IS ACTING UNDER THE DIRECTION OF A LICENSED PROFESSIONAL ENGINEER OR LAND SURVEYOR, TO ALTER AN ITEM IN ANY WAY. IF AN ITEM BEARING THE SEAL OF AN ENGINEER OR LAND SURVEYOR IS ALTERED, THE ALTERING ENGINEER OR LAND SURVEYOR SHALL AFFIX TO THE ITEM HIS SEAL AND NOTATION "ALTERED BY" FOLLOWED BY HIS SIGNATURE AND THE DATE OF SUCH ALTERATION, AND SPECIFIC DESCRIPTION OF THE ALTERATION.

SCALE: 1" = 60'
0 30 60 100 200

FOR TOWN USE

No.	REVISION	DATE

OWNER
I.H.C.C., INC. AND
ROBERG REVOCABLE TRUST
21 BREEZE HILL ROAD
NORTHPORT, NY, 11768
(631) 261 - 5700

APPLICANT:
THE PRESERVE AT INDIAN HILLS
1 RABRO DRIVE, SUITE 100
HAUPPAUGE, N.Y. 11788
(631) 351 - 4000

UTILITY PLAN 3
FOR
THE PRESERVE AT INDIAN HILLS
SITUATED AT
NORTHPORT
TOWN OF HUNTINGTON, SUFFOLK COUNTY, NEW YORK
S.C.T.M.: DISTRICT: 0400, SECT. 014, BLK. 04, LOTS 1 AND 2
DISTRICT 0400, SECT. 015, BLK. 01, LOTS 3.1, 3.2, 11, 12, 16, 19 AND P/O 22

THOMAS CHARLES DIXON
080916

NELSON + POPE
engineers • architects • surveyors
70 Maxess Road, Melville, NY 11747 • 631.427.5665 • nelsonpope.com

DRAWN BY: GEO	CADD No.: 86047 CSP 2021.DWG	SCALE: 1"=100'	DRAWING NO.: C - 117
CHECKED BY: JM	FILE NO.: 400-014		
DATE: OCTOBER, 2021	PROJECT NO.: 86047		SHEET NO.: 18 OF 44

G:\projects\86047\FINALS\CONDOMINIUM\86047 CSP 2021.dwg, 18 OF 44 UTILITY PLAN 3, 10/11/2021 2:33:26 PM

SHEET C-115
SHEET C-116
SHEET C-117
SHEET C-118
SHEET C-119
THIS SHEET
N
S
E
W
BREEZE HILL ROAD
MAKAMAH ROAD
MOHICAN COURT
COUNTRY CLUB DRIVE
SERENE PLACE
EXISTING
P92.59 PAVEMENT ELEVATION
TC92.59 TOP OF CURB ELEVATION
BC92.2 BOTTOM OF CURB ELEVATION
X92.0 SPOT ELEVATION
ELECTRIC BOX
PULL BOX
FIRE HYDRANT
GAS VALVE
WV WATER VALVE
TRANSFORMER
ELECTRIC POLE
LIGHT POLE
HIGH TENSION TOWER
W.M. WATER MAIN
W.S. WATER SERVICE
G.M. GAS MAIN
94 CONTOUR
E ELECTRIC
W WATER
G GAS
X FENCE
S SANITARY SEWER
T TELEPHONE
OHW OVERHEAD WIRE
D DRAINAGE
CATV TELEVISION
DRAINAGE MANHOLE
CATCH BASINS
TREE TO BE REMOVED
TREE TO REMAIN
MONUMENT
PROPOSED
(TC92.00) TOP OF CURB ELEVATION
(BC91.5) BOTTOM OF CURB ELEVATION
x(92.0) SPOT ELEVATION
LP LEACHING POOL
CB CATCH BASIN
SMH SANITARY MANHOLE
DMH DRAINAGE MANHOLE
(93) CONTOUR
LEACHING POOL W/ OPEN GRATE
LEACHING POOL W/ SOLID COVER
DRAINAGE BASIN
CATCH BASIN (TC ~ TOP OF CURB BOX)
HYDRANT
PS STREET TREE W / SYMBOL
(W) WATER
(FS) FIRE SERVICE
(WS) WATER SERVICE
(E) ELECTRIC
(G) GAS
X FENCE
(HC) SANITARY HOUSE CONNECTION
(D) DRAINAGE
(RD) ROOF DRAIN
(T) TELEPHONE
(CATV) TELEVISION
CONCRETE WALK
LIMIT OF CLEARING AND GRADING DURING CONSTRUCTION
SAWCUT W/ PAVEMENT TO BE REMOVED
TEST HOLE
DRAINAGE RIDGELINE
PROPOSED MONUMENT
LAND NOW OR FORMERLY OF EMORY REVOCABLE LIVING TRUST (S.C.T.M. 400-15-1-1) ZONE: R-40 RES
LAND NOW OR FORMERLY OF ROBERG REVOCABLE LIVING TRUST (S.C.T.M. 400-15-1-2.1) ZONE: R-40 RES
(4) LAND NOW OR FORMERLY OF UNKNOWN OWNER (S.C.T.M. 400-15-1-22) ZONE: R-40 RES
(5) LAND NOW OR FORMERLY OF FEDERICO (S.C.T.M. 400-15-1-4) ZONE: R-40 RES
LAND NOW OR FORMERLY OF CAMERON (S.C.T.M. 400-15-1-7) ZONE: R-40 RES
LAND NOW OR FORMERLY OF RONDINONE (S.C.T.M. 400-15-1-8) ZONE: R-40 RES
LAND NOW OR FORMERLY OF MONTIGLIO (S.C.T.M. 400-15-1-9) ZONE: R-40 RES
LOT 3 GOLF ASSOCIATION 1 (EXISTING GOLF COURSE) 115.72 AC
LOT 4 GOLF ASSOCIATION 2 (PROPOSED CLUBHOUSE, FITNESS CENTER AND DRIVING RANGE) 11.95 AC
LOT 5 THE PRESERVE AT INDIAN HILLS CONDOMINIUM 3 (36 UNITS) 14.46 AC
LOT 6 #40 AND #42 MAKAMAH ROAD 2.00 AC
LAND NOW OR FORMERLY OF STEINSVOLD (REV. TRUST) (S.C.T.M. 400-15-2-16) ZONE: R-40 RES
LAND NOW OR FORMERLY OF MARTINO (S.C.T.M. 400-15-1-13) ZONE: R-40 RES
LAND NOW OR FORMERLY OF GREENFIELD (S.C.T.M. 400-15-1-14) ZONE: R-40 RES
LAND NOW OR FORMERLY OF MATTUTAT (S.C.T.M. 400-15-2-17) ZONE: R-40 RES
LAND NOW OR FORMERLY OF SHAMPINATO (S.C.T.M. 400-15-1-15) ZONE: R-40 RES
(1) LAND NOW OR FORMERLY OF JEROME (S.C.T.M. 400-15-1-20) ZONE: R-40 RES
(2) LAND NOW OR FORMERLY OF BUBARIS (S.C.T.M. 400-15-1-17) ZONE: R-40 RES
(3) LAND NOW OR FORMERLY OF BERG (S.C.T.M. 400-15-1-18) ZONE: R-40 RES
LAND NOW OR FORMERLY OF BOZZELLA (S.C.T.M. 400-15-3-8.2) ZONE: R-40 RES
LAND NOW OR FORMERLY OF DANTONI (S.C.T.M. 400-15-3-31.16) ZONE: R-40 RES
PROPOSED WATER METER
PROPOSED RPZ
REFER TO SHEET C-119 FOR UTILITY STRUCTURES INFORMATION FOR CLUBHOUSE AREA
APPROXIMATE LOCATION OF PROPOSED CLUBHOUSE
DRAINAGE RESERVE AREA "J"
OVERFLOW STRUCTURE 2 GR EL. = 33.50 3" ORIFICE 29.00 8" ORIFICE 30.00 INV. W = 26.50
OVERFLOW DB 1 GR EL. = 28.20 INV. E = 24.75 INV. S = 24.75 INV. N = 24.75
PROPOSED LEVEL SPREADER
20' - 15"∅ PERFORATED CPP @ 0.00%
N75° 56' 15"E 635.00'
N40° 49' 42"E 86.97'
N14° 03' 45"W 59.19'
R=55.00' L=42.37'
R=30.00' L=23.11'
S14° 03' 45"E 268.46'
R=430.00' L=119.78'
S40° 40' 51"E 27.06'
S6° 44' 29"W 36.00'
S74° 01' 48"E 141.81'
S31° 52' 00"W 43.64'
S15° 29' 10"W 226.95'
S16° 42' 10"W 150.00'
S28° 53' 00"W 50.66'
N88° 19' 11"W 646.14'
S18° 33' 35"E 19.46'
N14° 35' 15"W 388.24'
S76° 06' 50"E
S16° 19' 30"E 115.80'
R=104.00' L=108.52'
R=220.56' L=98.16'
N82° 12' 45"E 248.65'
N05° 20' 55"W 268.01'
N84° 39' 05"E 232.90'
N24° 54' 10"W 6.69'
R=117.80' L=68.90'
S80° 49' 32"E 30.02'
N18° 33' 45"W 406.77'
N89° 35' 40"W 115.51'
N82° 44' 20"W 34.77'
N27° 55' 50"W 201.10'
N02° 05' 30"E 111.53'
S58° 14' 04"E 33.66'
R=29.00' L=26.33'
N69° 43' 34"E 103.09'
N69° 44' 10"E 44.96'
MH 5 GR EL. = 58.00 INV. E = 52.00 INV. SW = 31.40 INV. S = 53.00
MH 13 GR EL. = 76.87 INV. E = 69.52 INV. SE = 73.70 INV. W = 55.00
CB 10 GR EL. = 76.12 INV. E = 70.43 INV. W = 70.43
CB 11 GR EL. = 86.60 INV. W = 81.89
CB 9 GR EL. = 32.67 INV. NE = 30.00
CB 5 GR EL. = 73.64 INV. SE = 69.50 INV. NW = 73.40
CB 12 GR EL. = 76.56 INV. W = 71.50 INV. NW = 71.00
CB 13 GR EL. = 76.56 INV. E = 72.00
MH 12 GR EL. = 65.00 INV. S = 60.00 INV. N = 60.00
MH 11 GR EL. = 68.00 INV. N = 63.00 INV. SE = 63.00
MH 6 GR EL. = 69.50 INV. S = 64.50 INV. NW = 64.50
MH 7 GR EL. = 73.50 INV. S = 68.50 INV. N = 68.50
MH 8 GR EL. = 77.00 INV. S = 72.00 INV. N = 70.50 INV. E = 72.00
MH 9 GR EL. = 86.00 INV. SE = 77.50 INV. W = 73.50
GR EL. = 90.00 INV. SW = 85.00
DB 15 GR EL. = 79.00 INV. S = 75.00 INV. N = 75.00
DB 6 GR EL. = 81.00 INV. SW = 77.00 INV. N = 77.00
DB 7 GR EL. = 84.00 INV. NE = 80.50
CB 2 GR EL. = 89.20 INV. SE = 78.80 INV. NE = 84.50 INV. NW = 78.50
DB 3 GR EL. = 88.00 INV. S = 79.90
DB 4 GR EL. = 89.50 INV. S = 80.90 INV. N = 80.90
DB 2 GR EL. = 86.94 INV. S = 85.44 INV. N = 81.35 INV. E = 81.35
DB 1 GR EL. = 84.50 INV. W = 81.50
DB 5 GR EL. = 91.50 INV. N = 87.30
DB 14 GR EL. = 93.50 INV. SW = 89.10
DB 13 GR EL. = 91.00 INV. NE = 86.00 INV. W = 84.10
DB 12 GR EL. = 86.00 INV. E = 82.00 INV. W = 77.80
GR EL. = 80.00 INV. E = 76.00 INV. W = 71.50
DB 10 GR EL. = 73.50 INV. E = 69.50 INV. SW = 69.50
DB 9 GR EL. = 73.00 INV. NE = 69.00 INV. W = 60.54
MH 10 GR EL. = 51.00 INV. E = 46.00 INV. W = 32.50
DW 12 GR EL. = 35.50 H.W. EL. = 32.50 BOTTOM EL. = 28.50 12 Ø SLAB TOP LP - 4.0 FT ED INV. E = 30.00
OVERFLOW BASIN 1 GR EL. = 47.75 INV. S = 35.00 INV. NE = 35.00
OVERFLOW BASIN 1A GR EL. = 40.00 INV. N = 36.00
AD 34 GR EL. = 33.00 INV. W = 28.50
MH 4 GR EL. = 34.00 INV. E = 28.00 INV. N = 24.00 INV. E = 28.00
CB 7 GR EL. = 43.14 INV. E = 33.00 INV. NE = 38.50 INV. N = 33.00
CB 6 GR EL. = 43.17 INV. SW = 39.00
MH 3 GR EL. = 36.42 INV. W = 29.50 INV. S = 30.80
MH 2 GR EL. = 50.03 INV. E = 46.00 INV. SW = 34.30 INV. W = 33.80
MH 1 GR EL. = 59.98 INV. E = 55.00 INV. W = 48.00
CB 4 GR EL. = 70.01 INV. S = 65.00 INV. W = 56.50
CB 3 GR EL. = 70.01 INV. N = 65.50
HDWLL 2 GR EL. = 25.67 INV. NE = 23.50
HDWLL 3 GR EL. = 26.17 INV. S = 23.50
102' - 24"∅ CPP @ 1.37%
142' - 18"∅ CPP @ 2.11%
74' - 15"∅ CPP @ 1.23%
100' - 18"∅ CPP @ 7.03%
86' - 18"∅ CPP @ 3.49%
93' - 18"∅ CPP @ 1.62%
86' - 18"∅ CPP @ 4.67%
17' - 18"∅ CPP
127' - 18"∅ CPP
21' - 15"∅ CPP
98' - 18"∅ CPP @ 1.02%
32' - 15"∅ CPP
71' - 18"∅ CPP @ 2.12%
90' - 15"∅ CPP @ 3.89%
104' - 15"∅ CPP @ 1.06%
89' - 15"∅ CPP
12' - 15"∅ CPP @ 1.2%
49' - 15"∅ CPP @ 3.8%
104' - 15"∅ CPP @ 1.68%
37' - 18"∅ CPP @ 2.68%
73' - 24"∅ CPP @ 2.06%
116' - 24"∅ CPP @ 1.90%
21' - 18"∅ CPP @ 2.43%
12' - 24"∅ CPP @ 4.12%
39' - 24"∅ CPP @ 1.3%
48' - 18"∅ CPP @ 1.47%
71' - 18"∅ CPP @ 1.4%
103' - 18"∅ CPP @ 1.46%
21' - 15"∅ CPP @ 2.4%
89' - 15"∅ CPP @ 2.02%
75' - 15"∅ CPP @ 2.05%
24' - 15"∅ CPP @ 2.1%
73' - 24"∅ CPP @ 3.4%
100' - 15"∅ CPP @ 2.00%
89' - 15"∅ CPP @ 2.0%
108' - 15"∅ CPP @ 2.0%
153' - 15"∅ CPP @ 2.03%
39 40 41 42 43 44 45 46 47 48 49 50 51 52 53 54 55 56 57 58 59 60 61 62 63 64 65 66 67 68 69 70 71 72 73 74
SCALE: 1" = 60'
0 30 60 100 200

IT IS A VIOLATION OF NEW YORK STATE EDUCATION LAW ARTICLE 145, PROFESSIONAL ENGINEERING AND LAND SURVEYING, SECTION 7209 FOR ANY PERSON, UNLESS HE IS ACTING UNDER THE DIRECTION OF A LICENSED PROFESSIONAL ENGINEER OR LAND SURVEYOR, TO ALTER AN ITEM IN ANY WAY. IF AN ITEM BEARING THE SEAL OF AN ENGINEER OR LAND SURVEYOR IS ALTERED, THE ALTERING ENGINEER OR LAND SURVEYOR SHALL AFFIX TO THE ITEM HIS SEAL AND NOTATION "ALTERED BY" FOLLOWED BY HIS SIGNATURE AND THE DATE OF SUCH ALTERATION, AND SPECIFIC DESCRIPTION OF THE ALTERATION.

FOR TOWN USE

No.	REVISION	DATE

OWNER
I.H.C.C., INC. AND
ROBERG REVOCABLE TRUST
21 BREEZE HILL ROAD
NORTHPORT, NY, 11768
(631) 261 - 5700

APPLICANT:
THE PRESERVE AT INDIAN HILLS
1 RABRO DRIVE, SUITE 100
HAUPPAUGE, N.Y. 11788
(631) 351 - 4000

UTILITY PLAN 4
FOR
THE PRESERVE AT INDIAN HILLS
SITUATED AT
NORTHPORT
TOWN OF HUNTINGTON, SUFFOLK COUNTY, NEW YORK
S.C.T.M.: DISTRICT: 0400, SECT. 014, BLK. 04, LOTS 1 AND 2
DISTRICT 0400, SECT. 015, BLK. 01, LOTS 3.1, 3.2, 11, 12, 16, 19 AND P/O 22

THOMAS CHARLES DIXON
080915

NELSON + POPE
engineers • architects • surveyors
70 Maxess Road, Melville, NY 11747 • 631.427.5665 • nelsonpope.com

DRAWN BY: GEO	CADD No.: 86047 CSP 2021.DWG	SCALE: 1"=60'	DRAWING NO.: C - 118
CHECKED BY: JM	FILE NO.: 400-014		
DATE: OCTOBER, 2021	PROJECT NO.: 86047		SHEET NO.: 19 OF 44

G:\projects\86047\FINALS\CONDOMINIUM\86047 CSP 2021.dwg, 19 OF 44 UTILITY PLAN 4, 10/11/2021 2:33:35 PM

N
E
S
W
LOT 4
GOLF ASSOCIATION 2
(PROPOSED CLUBHOUSE,
FITNESS CENTER
AND DRIVING RANGE)
11.95 AC
INDIAN HILLS GOLF
COURSE CLUB HOUSE
F.FL. 121.0
B.FL. 109.0
F.FL. 108.5
EXISTING GOLF
PRO SHOP /
PROP. FITNESS
CENTER
PROPOSED
WATER METER
PROPOSED
RPZ
S40° 40' 51"E
27.06'
S6° 44' 29"W
36.00'
R=430.00'
L=119.78'
S74° 01' 48"E
141.81'
N40° 49' 42"E
86.97'
N14° 03' 45"W
59.19'
SHEET
C-115
SHEET
C-116
SHEET
C-117
SHEET
C-118
SHEET
C-119
THIS SHEET
SCALE: 1" = 30'
0
30
60
100

EXISTING

P92.59	PAVEMENT ELEVATION
TC92.59	TOP OF CURB ELEVATION
BC92.2	BOTTOM OF CURB ELEVATION
X92.0	SPOT ELEVATION
⊠	ELECTRIC BOX
⧄	PULL BOX
⊸	FIRE HYDRANT
G	GAS VALVE
WV ⋈	WATER VALVE
T	TRANSFORMER
⌀	ELECTRIC POLE
✲	LIGHT POLE
⊠	HIGH TENSION TOWER
W.M.	WATER MAIN
W.S.	WATER SERVICE
G.M.	GAS MAIN
94	CONTOUR
E	ELECTRIC
W	WATER
G	GAS
X	FENCE
S	SANITARY SEWER
T	TELEPHONE
OHW	OVERHEAD WIRE
D	DRAINAGE
CATV	TELEVISION
◎	DRAINAGE MANHOLE
▦	CATCH BASINS
✷	TREE TO BE REMOVED
	DECIDUOUS TREE TO REMAIN
✷	EVERGREEN TREE TO REMAIN
☐	MONUMENT

PROPOSED

(TC92.00)	TOP OF CURB ELEVATION
(BC91.5)	BOTTOM OF CURB ELEVATION
x(92.0)	SPOT ELEVATION
LP	LEACHING POOL
CB	CATCH BASIN
SMH	SANITARY MANHOLE
DMH	DRAINAGE MANHOLE
(93)	CONTOUR
◉	LEACHING POOL W/ OPEN GRATE
○	LEACHING POOL W/ SOLID COVER
▣	DRAINAGE BASIN
■	CATCH BASIN (TC ~ TOP OF CURB BOX)
⊸	HYDRANT
⊕ PS	STREET TREE W / SYMBOL
(W)	WATER
(FS)	FIRE SERVICE
(WS)	WATER SERVICE
(E)	ELECTRIC
(G)	GAS
X	FENCE
(HC)	SANITARY HOUSE CONNECTION
(D)	DRAINAGE
(RD)	ROOF DRAIN
(T)	TELEPHONE
(CATV)	TELEVISION
▨	CONCRETE WALK
/ / /	LIMIT OF CLEARING AND GRADING DURING CONSTRUCTION
▨	SAWCUT W/ PAVEMENT TO BE REMOVED
⊕	TEST HOLE
▬ ▬ ▬	DRAINAGE RIDGELINE
■	PROPOSED MONUMENT

FOR TOWN USE

No.	REVISION	DATE

OWNER
I.H.C.C., INC. AND
ROBERG REVOCABLE TRUST
21 BREEZE HILL ROAD
NORTHPORT, NY, 11768
(631) 261 - 5700

APPLICANT:
THE PRESERVE AT INDIAN HILLS
1 RABRO DRIVE, SUITE 100
HAUPPAUGE, N.Y. 11788
(631) 351 - 4000

UTILITY PLAN 5

FOR

THE PRESERVE AT INDIAN HILLS

SITUATED AT

NORTHPORT

TOWN OF HUNTINGTON, SUFFOLK COUNTY, NEW YORK

S.C.T.M.: DISTRICT: 0400, SECT. 014, BLK. 04, LOTS 1 AND 2
DISTRICT 0400, SECT. 015, BLK. 01, LOTS 3.1, 3.2, 11, 12, 16, 19 AND P/O 22

THOMAS CHARLES DIXON
080915

NELSON + POPE
engineers • architects • surveyors
70 Maxess Road, Melville, NY 11747 • 631.427.5665 • nelsonpope.com

DRAWN BY: GEO	CADD No.: 86047 CSP 2021.DWG	SCALE: 1"=30'	DRAWING NO.: C - 119
CHECKED BY: JM	FILE NO.: 400-014		
DATE: OCTOBER, 2021	PROJECT NO.: 86047		SHEET NO.: 20 OF 44

G:\projects\86047\FINALS\CONDOMINIUM\86047 CSP 2021.dwg, 20 OF 44 UTILITY PLAN 5, 10/11/2021 2:33:54 PM

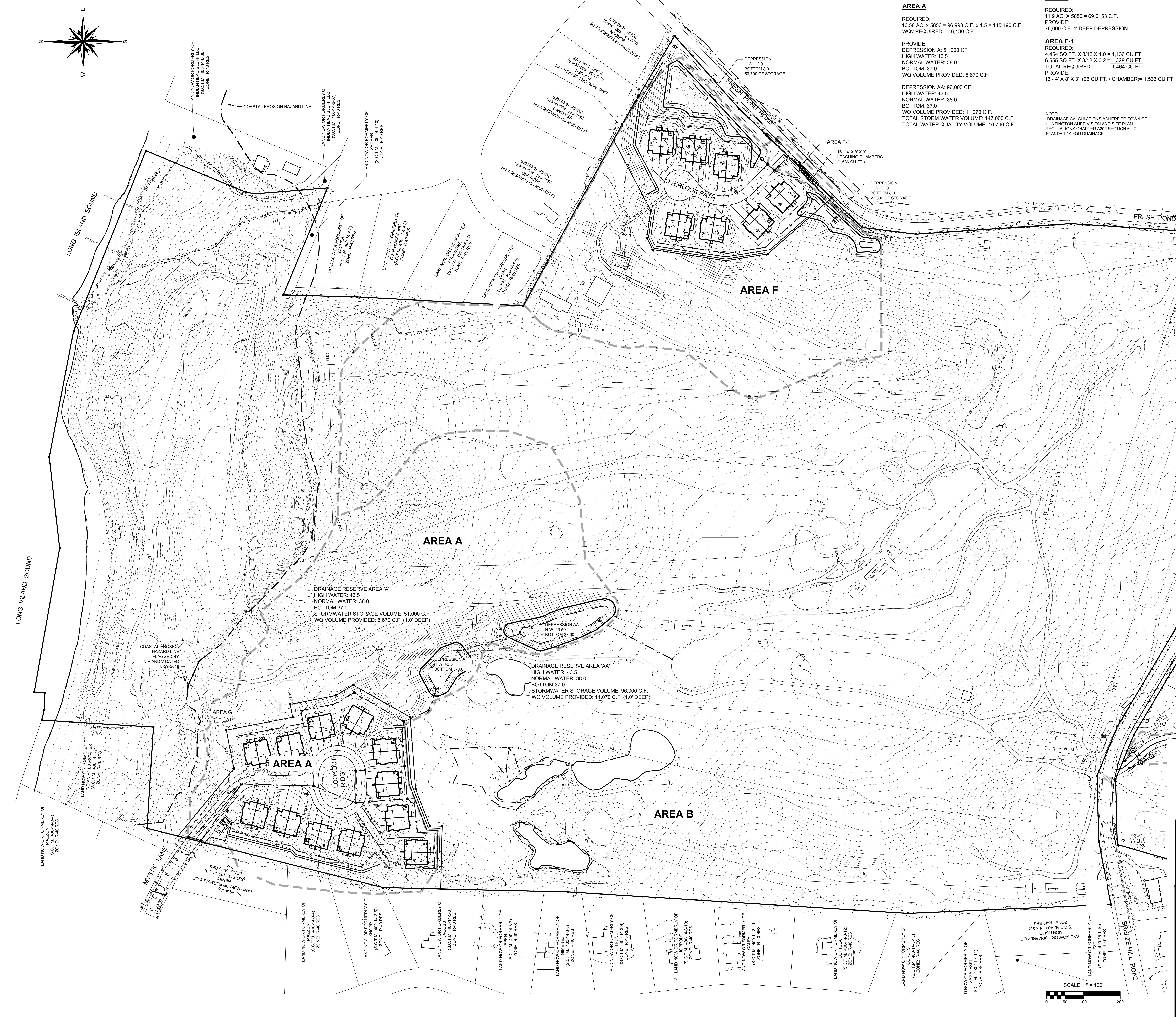
LONG ISLAND SOUND
LONG ISLAND SOUND
COASTAL EROSION HAZARD LINE
COASTAL EROSION HAZARD LINE FLAGGED BY N.P.AND V DATED 8-29-2018
AREA A
AREA A
AREA F
AREA B
AREA G
LOOKOUT RIDGE
OVERLOOK PATH
FRESH POND ROAD
FRESH POND ROAD
BREEZE HILL ROAD
BREEZE HILL ROAD
MYSTIC LANE
DEPRESSION H.W. 12.0 BOTTOM 8.0 53,700 CF STORAGE
AREA F-1
16 - 4' X 8' X 3' LEACHING CHAMBERS (1,536 CU.FT.)
DEPRESSION H.W. 12.0 BOTTOM 8.0 22,300 CF STORAGE
DRAINAGE RESERVE AREA 'A'
HIGH WATER: 43.5
NORMAL WATER: 38.0
BOTTOM 37.0
STORMWATER STORAGE VOLUME: 51,000 C.F.
WQ VOLUME PROVIDED: 5,670 C.F. (1.0' DEEP)
DEPRESSION AA H.W. 43.50 BOTTOM 37.00
DEPRESSION A H.W. 43.5 BOTTOM 37.00
DRAINAGE RESERVE AREA 'AA'
HIGH WATER: 43.5
NORMAL WATER: 38.0
BOTTOM 37.0
STORMWATER STORAGE VOLUME: 96,000 C.F.
WQ VOLUME PROVIDED: 11,070 C.F. (1.0' DEEP)
TEE 12
TEE 14
TEE 15
TEE 18
GREEN 11
GREEN 13
LAND NOW OR FORMERLY OF TRUTESCU (S.C.T.M. 400-15-2-1) ZONE: R-40 RES
LAND NOW OR FORMERLY OF (S.C.T.M. 400-14-3-4) ZONE: R-40 RES
SCALE: 1" = 100'
0 50 100 200

DRAINAGE CALCULATIONS

AREA A

REQUIRED:
16.58 AC. x 5850 = 96,993 C.F. x 1.5 = 145,490 C.F.
WQv REQUIRED = 16,130 C.F.

PROVIDE:
DEPRESSION A: 51,000 CF
HIGH WATER: 43.5
NORMAL WATER: 38.0
BOTTOM: 37.0
WQ VOLUME PROVIDED: 5,670 C.F.

DEPRESSION AA: 96,000 CF
HIGH WATER: 43.5
NORMAL WATER: 38.0
BOTTOM: 37.0
WQ VOLUME PROVIDED: 11,070 C.F.
TOTAL STORM WATER VOLUME: 147,000 C.F.
TOTAL WATER QUALITY VOLUME: 16,740 C.F.

AREA F

REQUIRED:
11.9 AC. X 5850 = 69,6153 C.F.
PROVIDE:
76,000 C.F. 4' DEEP DEPRESSION

AREA F-1

REQUIRED:
4,454 SQ.FT. X 3/12 X 1.0 = 1,136 CU.FT.
6,555 SQ.FT. X 3/12 X 0.2 = 328 CU.FT.
TOTAL REQUIRED = 1,464 CU.FT.
PROVIDE:
16 - 4' X 8' X 3' (96 CU.FT. / CHAMBER)= 1,536 CU.FT.

NOTE:
DRAINAGE CALCULATIONS ADHERE TO TOWN OF HUNTINGTON SUBDIVISION AND SITE PLAN REGULATIONS CHAPTER A202 SECTION 6.1.2 STANDARDS FOR DRAINAGE.

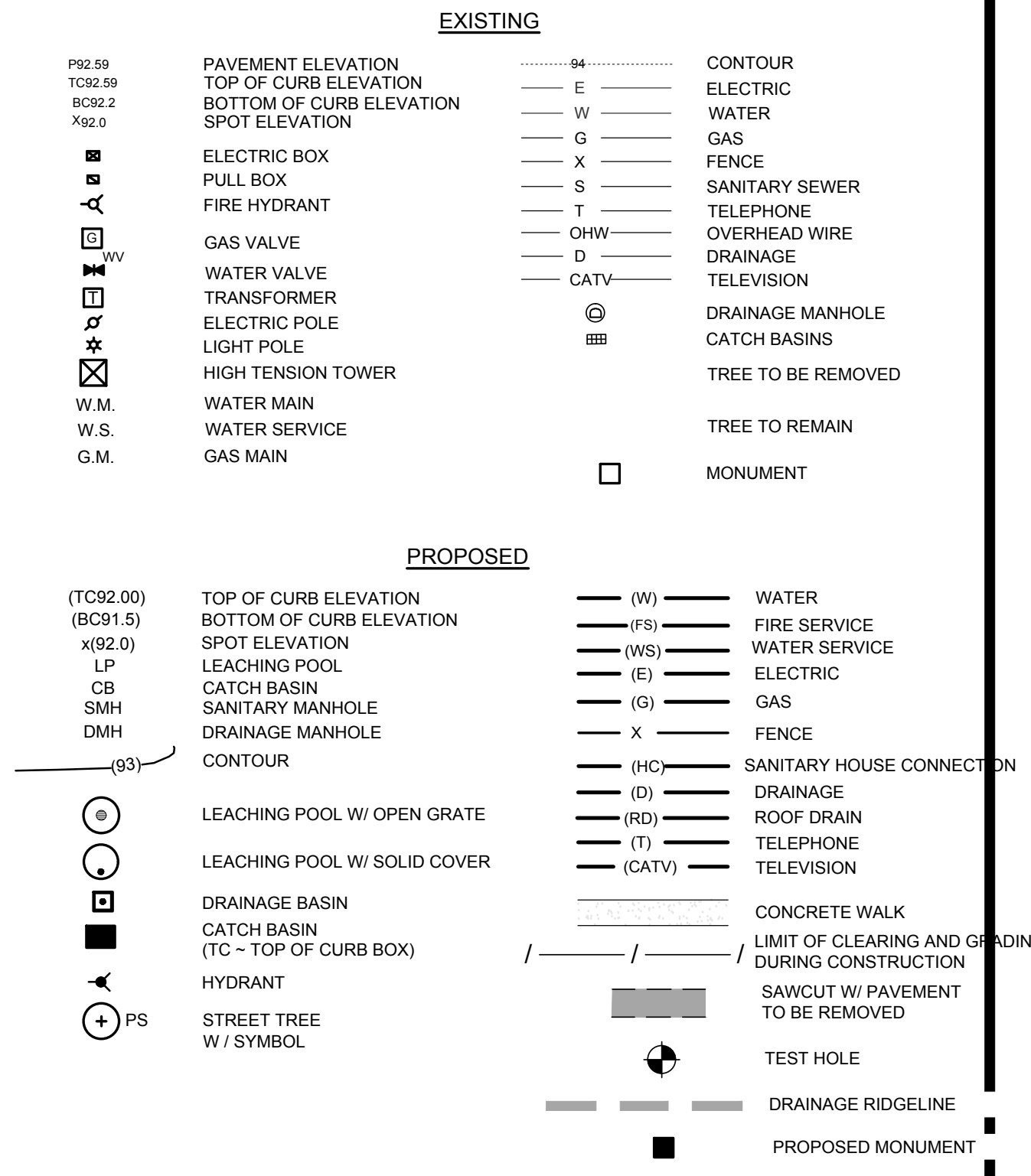
EXISTING
P92.59 PAVEMENT ELEVATION
TC92.59 TOP OF CURB ELEVATION
BC92.2 BOTTOM OF CURB ELEVATION
X92.0 SPOT ELEVATION
ELECTRIC BOX
PULL BOX
FIRE HYDRANT
GAS VALVE
WV WATER VALVE
TRANSFORMER
ELECTRIC POLE
LIGHT POLE
HIGH TENSION TOWER
W.M. WATER MAIN
W.S. WATER SERVICE
G.M. GAS MAIN
94 CONTOUR
E ELECTRIC
W WATER
G GAS
X FENCE
S SANITARY SEWER
T TELEPHONE
OHW OVERHEAD WIRE
D DRAINAGE
CATV TELEVISION
DRAINAGE MANHOLE
CATCH BASINS
TREE TO BE REMOVED
TREE TO REMAIN
MONUMENT
PROPOSED
(TC92.00) TOP OF CURB ELEVATION
(BC91.5) BOTTOM OF CURB ELEVATION
x(92.0) SPOT ELEVATION
LP LEACHING POOL
CB CATCH BASIN
SMH SANITARY MANHOLE
DMH DRAINAGE MANHOLE
(93) CONTOUR
LEACHING POOL W/ OPEN GRATE
LEACHING POOL W/ SOLID COVER
DRAINAGE BASIN
CATCH BASIN (TC ~ TOP OF CURB BOX)
HYDRANT
PS STREET TREE W / SYMBOL
(W) WATER
(FS) FIRE SERVICE
(WS) WATER SERVICE
(E) ELECTRIC
(G) GAS
X FENCE
(HC) SANITARY HOUSE CONNECTION
(D) DRAINAGE
(RD) ROOF DRAIN
(T) TELEPHONE
(CATV) TELEVISION
CONCRETE WALK
LIMIT OF CLEARING AND GRADING DURING CONSTRUCTION
SAWCUT W/ PAVEMENT TO BE REMOVED
TEST HOLE
DRAINAGE RIDGELINE
PROPOSED MONUMENT

FOR TOWN USE

No.	REVISION	DATE

OWNER
I.H.C.C., INC. AND
ROBERG REVOCABLE TRUST
21 BREEZE HILL ROAD
NORTHPORT, NY, 11768
(631) 261 - 5700

APPLICANT:
THE PRESERVE AT INDIAN HILLS
1 RABRO DRIVE, SUITE 100
HAUPPAUGE, N.Y. 11788
(631) 351 - 4000

OVERALL DRAINAGE PLAN - NORTH PARCEL
FOR
THE PRESERVE AT INDIAN HILLS
SITUATED AT
NORTHPORT
TOWN OF HUNTINGTON, SUFFOLK COUNTY, NEW YORK
S.C.T.M.: DISTRICT: 0400, SECT. 014, BLK. 04, LOTS 1 AND 2
DISTRICT 0400, SECT. 015, BLK. 01, LOTS 3.1, 3.2, 11, 12, 16, 19 AND P/O 22

THOMAS CHARLES DIXON
080919

NELSON + POPE
engineers • architects • surveyors
70 Maxess Road, Melville, NY 11747 • 631.427.5665 • nelsonpope.com

DRAWN BY: GEO	CADD No.: 86047 CSP 2021.DWG	SCALE:	DRAWING NO.:	
CHECKED BY: JM	FILE NO.: 400-014	1"=100'	C - 120	
DATE: OCTOBER, 2021	PROJECT NO.: 86047		SHEET NO.: 21 OF 44	

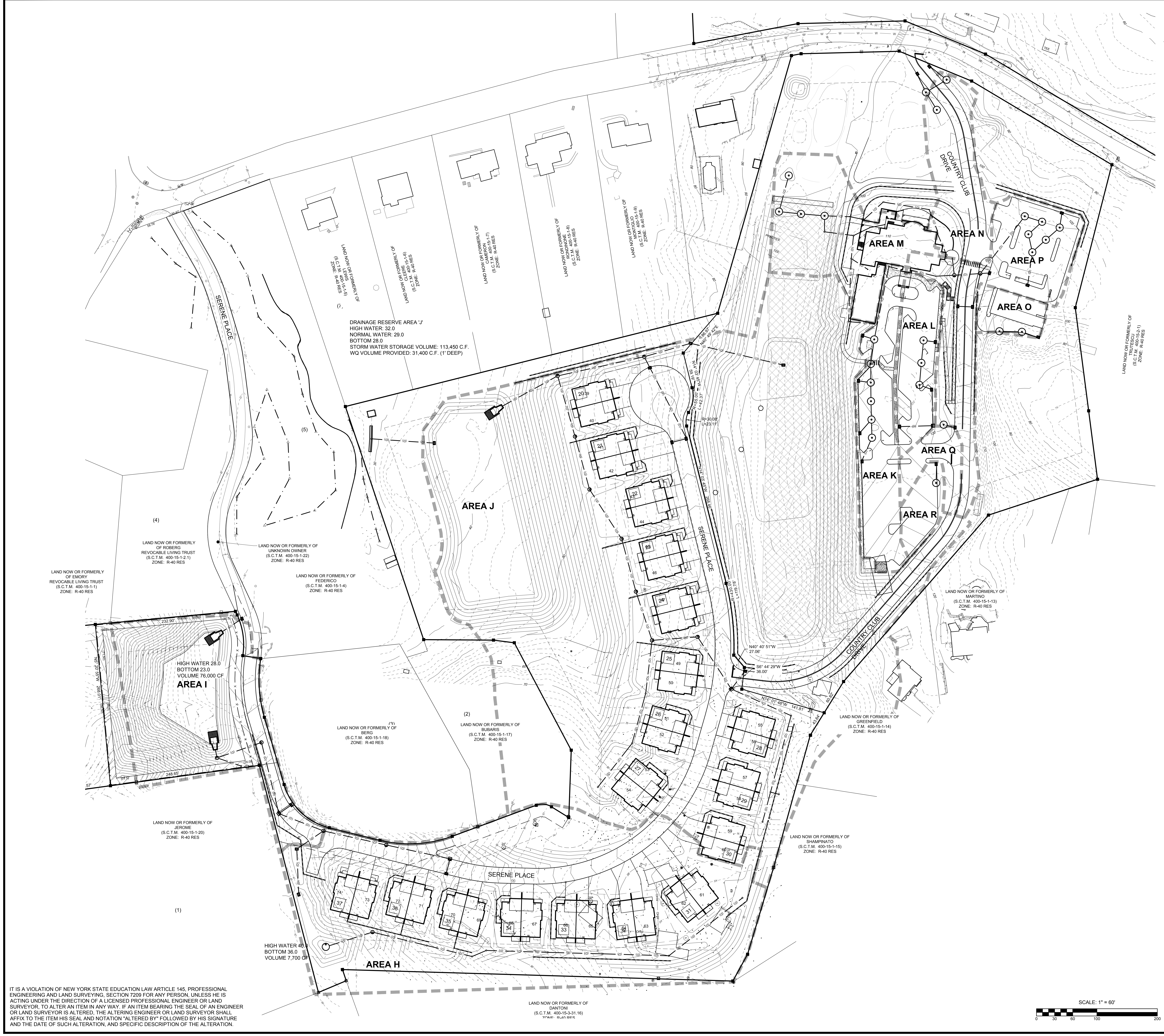
SERENE PLACE
COUNTRY CLUB DRIVE
AREA H
AREA I
AREA J
AREA K
AREA L
AREA M
AREA N
AREA O
AREA P
AREA Q
AREA R
HIGH WATER 28.0
BOTTOM 23.0
VOLUME 76,000 CF
HIGH WATER 40.0
BOTTOM 36.0
VOLUME 7,700 CF
DRAINAGE RESERVE AREA 'J'
HIGH WATER: 32.0
NORMAL WATER: 29.0
BOTTOM 28.0
STORM WATER STORAGE VOLUME: 113,450 C.F.
WQ VOLUME PROVIDED: 31,400 C.F. (1' DEEP)
LAND NOW OR FORMERLY OF LEWIS (S.C.T.M. 400-15-1-5) ZONE: R-40 RES
LAND NOW OR FORMERLY OF CLEERE (S.C.T.M. 400-15-1-6) ZONE: R-40 RES
LAND NOW OR FORMERLY OF CAMERON (S.C.T.M. 400-15-1-7) ZONE: R-40 RES
LAND NOW OR FORMERLY OF RONDINONE (S.C.T.M. 400-15-1-8) ZONE: R-40 RES
LAND NOW OR FORMERLY OF MONTIGLIO (S.C.T.M. 400-15-1-9) ZONE: R-40 RES
LAND NOW OR FORMERLY OF TRUTESCU (S.C.T.M. 400-15-2-1) ZONE: R-40 RES
LAND NOW OR FORMERLY OF ROBERG REVOCABLE LIVING TRUST (S.C.T.M. 400-15-1-2.1) ZONE: R-40 RES
LAND NOW OR FORMERLY OF UNKNOWN OWNER (S.C.T.M. 400-15-1-22) ZONE: R-40 RES
LAND NOW OR FORMERLY OF EMORY REVOCABLE LIVING TRUST (S.C.T.M. 400-15-1-1) ZONE: R-40 RES
LAND NOW OR FORMERLY OF FEDERICO (S.C.T.M. 400-15-1-4) ZONE: R-40 RES
LAND NOW OR FORMERLY OF BERG (S.C.T.M. 400-15-1-18) ZONE: R-40 RES
LAND NOW OR FORMERLY OF BUBARIS (S.C.T.M. 400-15-1-17) ZONE: R-40 RES
LAND NOW OR FORMERLY OF JEROME (S.C.T.M. 400-15-1-20) ZONE: R-40 RES
LAND NOW OR FORMERLY OF MARTINO (S.C.T.M. 400-15-1-13) ZONE: R-40 RES
LAND NOW OR FORMERLY OF GREENFIELD (S.C.T.M. 400-15-1-14) ZONE: R-40 RES
LAND NOW OR FORMERLY OF SHAMPINATO (S.C.T.M. 400-15-1-15) ZONE: R-40 RES
LAND NOW OR FORMERLY OF DANTONI (S.C.T.M. 400-15-3-31.16) ZONE: R-40 RES
(1)
(2)
(3)
(4)
(5)
232.90'
248.65'
N5° 20' 55"W 268.01'
N40° 40' 51"W 27.06'
S6° 44' 29"W 36.00'
N74° 01' 48"W 141.81'
60.82'
43.64'
R=430.00' L=119.78'
R=30.00' L=23.11'
R=55.00'
N14° 03' 45"W 59.19'
SCALE: 1" = 60'
0
30
60
100
200

DRAINAGE CALCULATIONS

AREA H

REQUIRED:
4.54 AC. x 5850 = 26,559 C.F. x 1.5 = 39,838 C.F.

PROVIDE:
7,700 C.F. 4' DEPRESSION
H.W. 40.0
BOTTOM 36.0
OVERFLOW TO I = 32,138 C.F.

AREA I

REQUIRED:
1.54 AC. X 5850 = 9,009 C.F. x 1.5 = 13,513 C.F.
OVERFLOW FROM H = 32,138 C.F.
TOTAL REQUIRED: = 45,651 C.F.

PROVIDE:
76,000 C.F. 5' DEPRESSION
H.W. 28.0
BOTTOM 23.0

AREA J

REQUIRED:
12.38 AC. X 5850 = 72,423 C.F. X 1.5 = 108,634 C.F.
WQv REQUIRED = 15,280 CF

PROVIDE:
HIGH WATER: 32.0
NORMAL WATER: 29.0
BOTTOM: 28.0
STORM WATER STORAGE VOLUME: 113,450 C.F.
WQ VOLUME PROVIDED: 31,400 C.F. (1' DEEP)

AREA K

REQUIRED:

ROOF:	1,500 X 1.0 =	1,500
PAVEMENT:	25,970 X 0.9 =	23,373
LAND:	8,800 X 0.2 =	1,760
TOTAL		26,633

26,633 / 36,270 = 0.73
36,270 X 0.73 X 3/12 = 6,619 CU.FT.

PROVIDE:
(6) 12' DIA X 12 EFF. DEPTH LP = 7,264 CU.FT.

PROVIDE:
29,400 C.F. 4' DEPRESSION

AREA L

REQUIRED:

PAVEMENT:	13,700 X 0.9 =	12,330
LAND:	3,800 X 0.2 =	760
TOTAL		13,090

13,090 / 17,500 = 0.75
17,500 X 0.75 X 3/12 = 3,281 CU.FT.

PROVIDE:
(3) 12' DIA X 11' EFF. DEPTH LP = 3,330 CU.FT.

AREA M

REQUIRED:

ROOF:	10,430 X 1.0 =	10,430
PATIO:	1,216 X 1.0 =	1,216
PAVEMENT:	3,750 X 0.9 =	3,375
LAND:	24,368 X 0.2 =	4,873
TOTAL		19,894

19,894 / 39,764 = 0.50

39,764 X 0.5 X 3/12 = 4,973 CU.FT.

PROVIDE:
(4) 12' DIA X 13' EFF. DEPTH LP = 5,246 CU.FT.

AREA N

REQUIRED:

PAVEMENT:	8,535 X 0.9 =	7,682
LAND:	16,500 X 0.2 =	3,300
TOTAL		10,882

10,882 / 25,035 = 0.43
25,035 X 0.43 X 3/12 = 2,691 CU.FT.

PROVIDE:
(3) 12' DIA X 15' EFF. DEPTH LP = 4,539 CU.FT.

AREA O

REQUIRED:

PAVEMENT:	3,950 X 0.9 =	3,555
ROOF:	3,750 X 1.0 =	3,750
TOTAL		7,305

7,305 / 7,700 = 0.95
7,700 X 0.95 X 3/12 = 1,829 CU.FT.

PROVIDE:
(2) 12' DIA X 10' EFF. DEPTH LP = 2,018 CU.FT.

AREA P

REQUIRED:

ROOF / PATIO:	1,810 X 1.0 =	1,810
PAVEMENT:	29,020 X 0.9 =	26,118
LAND:	14,455 X 0.2 =	2,891
TOTAL		30,819

30,819 / 45,285 = 0.68
45,285 X 0.68 X 3/12 = 7,699 CU.FT.

PROVIDE:
(6) 12' DIA X 13' EFF. DEPTH LP = 7,870CU.FT.

AREA Q

REQUIRED:

PAVEMENT:	5,740 X 0.9 =	5,166
LAND	2,710 X 0.2 =	542
TOTAL		5,708

5,708 / 8,450 = 0.68
8,450 X 0.68 X 3/12 = 1,437 CU.FT.

PROVIDE:
(1) 12' DIA X 15' EFF. DEPTH LP = 1514 CU.FT.

AREA R

REQUIRED:

PAVEMENT:	5,840 X 0.9 =	5,256
LAND	1,700 X 0.2 =	340
TOTAL		5,596

5,596 / 7,540 = 0.74
7,540 X 0.74 X 3/12 = 1,395 CU.FT.

PROVIDE:
(1) 12' DIA X 14' EFF. DEPTH LP = 1,412 CU.FT.

NOTE:
DRAINAGE CALCULATIONS ADHERE TO TOWN OF HUNTINGTON SUBDIVISION AND SITE PLAN REGULATIONS CHAPTER A202 SECTION 6.1.2 STANDARDS FOR DRAINAGE.

IT IS A VIOLATION OF NEW YORK STATE EDUCATION LAW ARTICLE 145, PROFESSIONAL ENGINEERING AND LAND SURVEYING, SECTION 7209 FOR ANY PERSON, UNLESS HE IS ACTING UNDER THE DIRECTION OF A LICENSED PROFESSIONAL ENGINEER OR LAND SURVEYOR, TO ALTER AN ITEM IN ANY WAY. IF AN ITEM BEARING THE SEAL OF AN ENGINEER OR LAND SURVEYOR IS ALTERED, THE ALTERING ENGINEER OR LAND SURVEYOR SHALL AFFIX TO THE ITEM HIS SEAL AND NOTATION "ALTERED BY" FOLLOWED BY HIS SIGNATURE AND THE DATE OF SUCH ALTERATION, AND SPECIFIC DESCRIPTION OF THE ALTERATION.

FOR TOWN USE

No.	REVISION	DATE

OWNER
I.H.C.C., INC. AND
ROBERG REVOCABLE TRUST
21 BREEZE HILL ROAD
NORTHPORT, NY, 11768
(631) 261 - 5700

APPLICANT:
THE PRESERVE AT INDIAN HILLS
1 RABRO DRIVE, SUITE 100
HAUPPAUGE, N.Y. 11788
(631) 351 - 4000

OVERALL DRAINAGE PLAN - SOUTH PARCEL
FOR
THE PRESERVE AT INDIAN HILLS
SITUATED AT
NORTHPORT
TOWN OF HUNTINGTON, SUFFOLK COUNTY, NEW YORK
S.C.T.M.: DISTRICT: 0400, SECT. 014, BLK. 04, LOTS 1 AND 2
DISTRICT 0400, SECT. 015, BLK. 01, LOTS 3.1, 3.2, 11, 12, 16, 19 AND P/O 22

THOMAS CHARLES DIXON
080913

NELSON + POPE
engineers • architects • surveyors
70 Maxess Road, Melville, NY 11747 • 631.427.5665 • nelsonpope.com

DRAWN BY: GEO	CADD No.: 86047 CSP 2021.DWG	SCALE:		DRAWING NO.: C - 121
CHECKED BY: JM	FILE NO.: 400-014	1"=60'		
DATE: OCTOBER, 2021	PROJECT NO.: 86047			SHEET NO.: 22 OF 44

G:\projects\86047\FINALS\CONDOMINIUM\86047 CSP 2021.dwg, 22 OF 44 OVERALL DRAINAGE PLAN - SOUTH PARCEL, 10/11/2021 2:35:52 PM

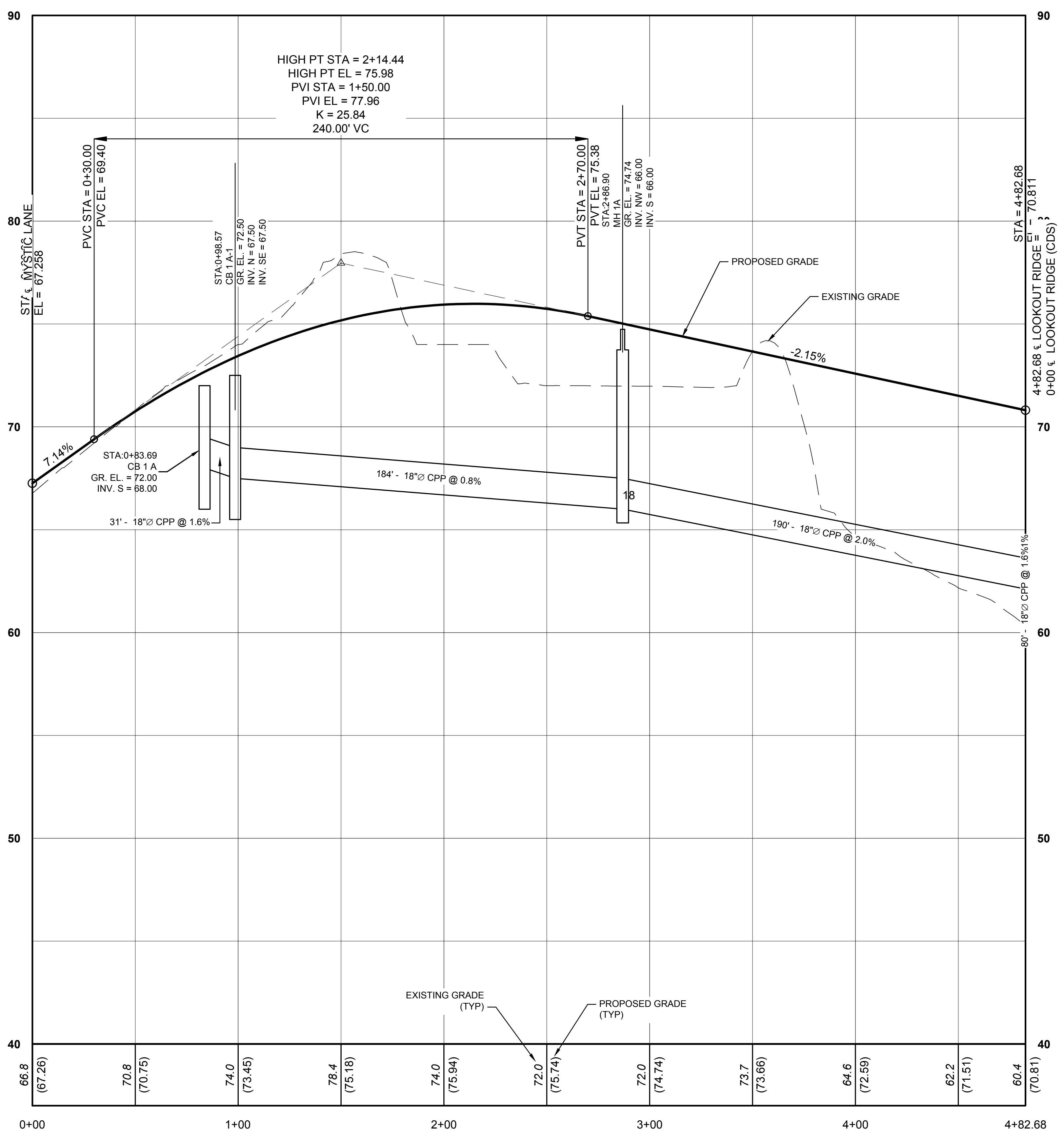
HIGH PT STA = 2+14.44
HIGH PT EL = 75.98
PVI STA = 1+50.00
PVI EL = 77.96
K = 25.84
240.00' VC
STA ℄ MYSTIC LANE
EL = 67.258
PVC STA = 0+30.00
PVC EL = 69.40
STA:0+98.57
CB 1 A-1
GR. EL. = 72.50
INV. N = 67.50
INV. SE = 67.50
PVT STA = 2+70.00
PVT EL = 75.38
STA:2+86.90
MH 1A
GR. EL. = 74.74
INV. NW = 66.00
INV. S = 66.00
STA = 4+82.68
EL = 70.811
4+82.68 ℄ LOOKOUT RIDGE = 0+00 ℄ LOOKOUT RIDGE (CDS)
PROPOSED GRADE
EXISTING GRADE
7.14%
-2.15%
STA:0+83.69
CB 1 A
GR. EL. = 72.00
INV. S = 68.00
184' - 18"∅ CPP @ 0.8%
31' - 18"∅ CPP @ 1.6%
18
190' - 18"∅ CPP @ 2.0%
80' - 18"∅ CPP @ 1.6%1%
EXISTING GRADE (TYP)
PROPOSED GRADE (TYP)
90
80
70
60
50
40
66.8 (67.26)
70.8 (70.75)
74.0 (73.45)
78.4 (75.18)
74.0 (75.94)
72.0 (75.74)
72.0 (74.74)
73.7 (73.66)
64.6 (72.59)
62.2 (71.51)
60.4 (70.81)
0+00
1+00
2+00
3+00
4+00
4+82.68

LOOKOUT RIDGE

STA. 0+00.00 TO STA. 4+82.68

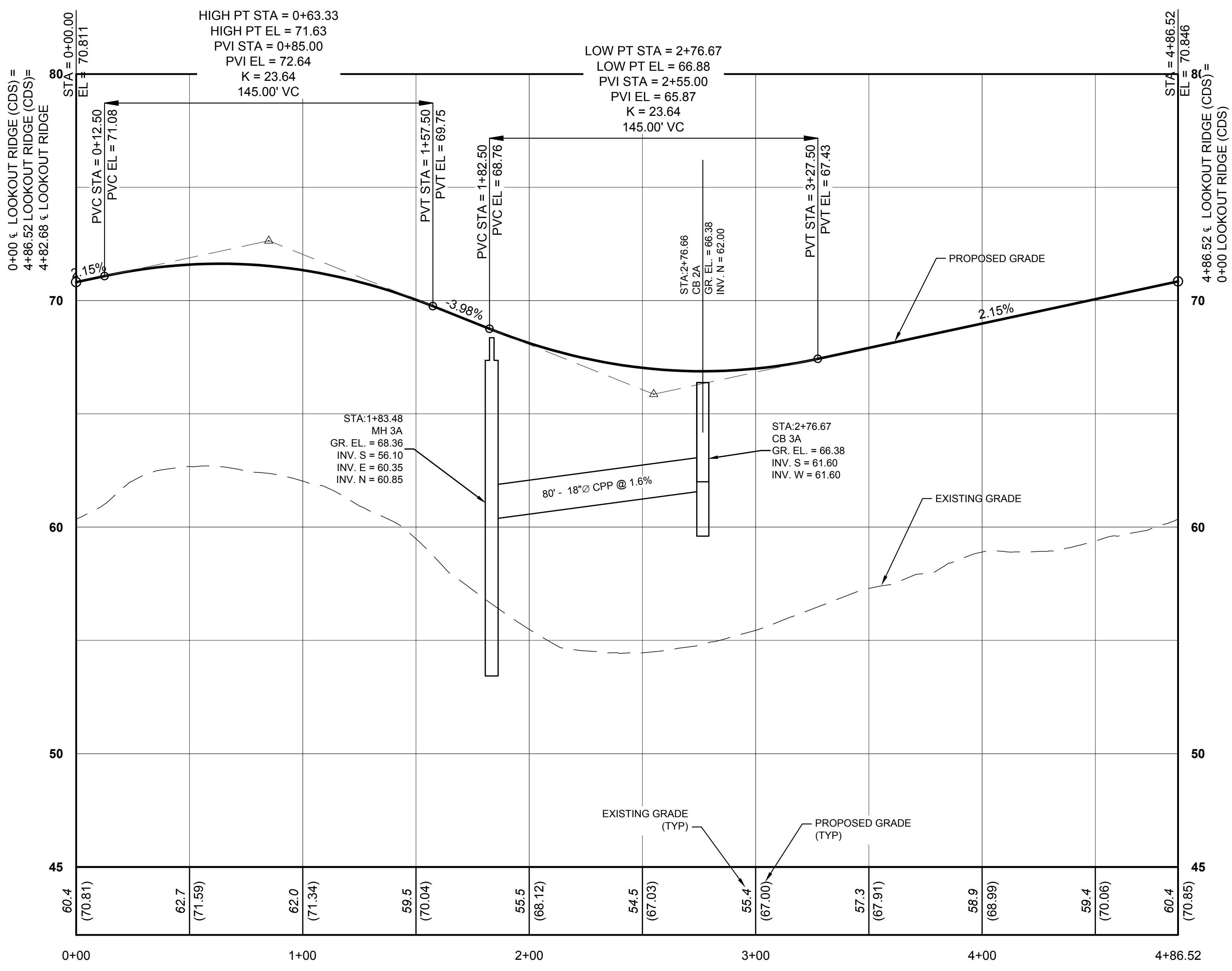
HIGH PT STA = 0+63.33
HIGH PT EL = 71.63
PVI STA = 0+85.00
PVI EL = 72.64
K = 23.64
145.00' VC
LOW PT STA = 2+76.67
LOW PT EL = 66.88
PVI STA = 2+55.00
PVI EL = 65.87
K = 23.64
145.00' VC
STA = 0+00.00
EL = 70.811
0+00 ℄ LOOKOUT RIDGE (CDS) = 4+86.52 LOOKOUT RIDGE (CDS)= 4+82.68 ℄ LOOKOUT RIDGE
PVC STA = 0+12.50
PVC EL = 71.08
PVT STA = 1+57.50
PVT EL = 69.75
PVC STA = 1+82.50
PVC EL = 68.76
STA:2+76.66
CB 2A
GR. EL. = 66.38
INV. N = 62.00
PVT STA = 3+27.50
PVT EL = 67.43
STA = 4+86.52
EL = 70.846
4+86.52 ℄ LOOKOUT RIDGE (CDS)= 0+00 LOOKOUT RIDGE (CDS) = 4+82.68 ℄ LOOKOUT RIDGE
2.15%
-3.98%
2.15%
PROPOSED GRADE
STA:1+83.48
MH 3A
GR. EL. = 68.36
INV. S = 56.10
INV. E = 60.35
INV. N = 60.85
80' - 18"∅ CPP @ 1.6%
STA:2+76.67
CB 3A
GR. EL. = 66.38
INV. S = 61.60
INV. W = 61.60
EXISTING GRADE
EXISTING GRADE (TYP)
PROPOSED GRADE (TYP)
80
70
60
50
45
60.4 (70.81)
62.7 (71.59)
62.0 (71.34)
59.6 (70.04)
55.5 (68.12)
54.5 (67.03)
55.4 (67.00)
57.3 (67.91)
58.9 (68.99)
59.4 (70.06)
60.4 (70.85)
0+00
1+00
2+00
3+00
4+00
4+86.52

LOOKOUT RIDGE CDS

STA. 0+00.00 TO STA. 4+86.52

FOR TOWN USE

No.	REVISION	DATE

OWNER
I.H.C.C., INC. AND
ROBERG REVOCABLE TRUST
21 BREEZE HILL ROAD
NORTHPORT, NY, 11768
(631) 261 - 5700

APPLICANT:
THE PRESERVE AT INDIAN HILLS
1 RABRO DRIVE, SUITE 100
HAUPPAUGE, N.Y. 11788
(631) 351 - 4000

PROFILES 1
FOR
THE PRESERVE AT INDIAN HILLS
SITUATED AT
NORTHPORT
TOWN OF HUNTINGTON, SUFFOLK COUNTY, NEW YORK
S.C.T.M.: DISTRICT: 0400, SECT. 014, BLK. 04, LOTS 1 AND 2
DISTRICT 0400, SECT. 015, BLK. 01, LOTS 3.1, 3.2, 11, 12, 16, 19 AND P/O 22

THOMAS CHARLES DIXON
080915

NELSON + POPE
engineers • architects • surveyors
70 Maxess Road, Melville, NY 11747 • 631.427.5665 • nelsonpope.com

DRAWN BY: GEO	CADD No.: 86047 CSP 2021.DWG	SCALE:	DRAWING NO.: C - 122
CHECKED BY: JM	FILE NO.: 400-014	1" VERT = 4' 1" HORZ = 40'	
DATE: OCTOBER, 2021	PROJECT NO.: 86047		SHEET NO.: 23 OF 44

SCALE: 1" VERT = 4'
0 4 6 10

SCALE: 1" HORZ = 40'
0 40 60 100

IT IS A VIOLATION OF NEW YORK STATE EDUCATION LAW ARTICLE 145, PROFESSIONAL ENGINEERING AND LAND SURVEYING, SECTION 7209 FOR ANY PERSON, UNLESS HE IS ACTING UNDER THE DIRECTION OF A LICENSED PROFESSIONAL ENGINEER OR LAND SURVEYOR, TO ALTER AN ITEM IN ANY WAY. IF AN ITEM BEARING THE SEAL OF AN ENGINEER OR LAND SURVEYOR IS ALTERED, THE ALTERING ENGINEER OR LAND SURVEYOR SHALL AFFIX TO THE ITEM HIS SEAL AND NOTATION "ALTERED BY" FOLLOWED BY HIS SIGNATURE AND THE DATE OF SUCH ALTERATION, AND SPECIFIC DESCRIPTION OF THE ALTERATION.

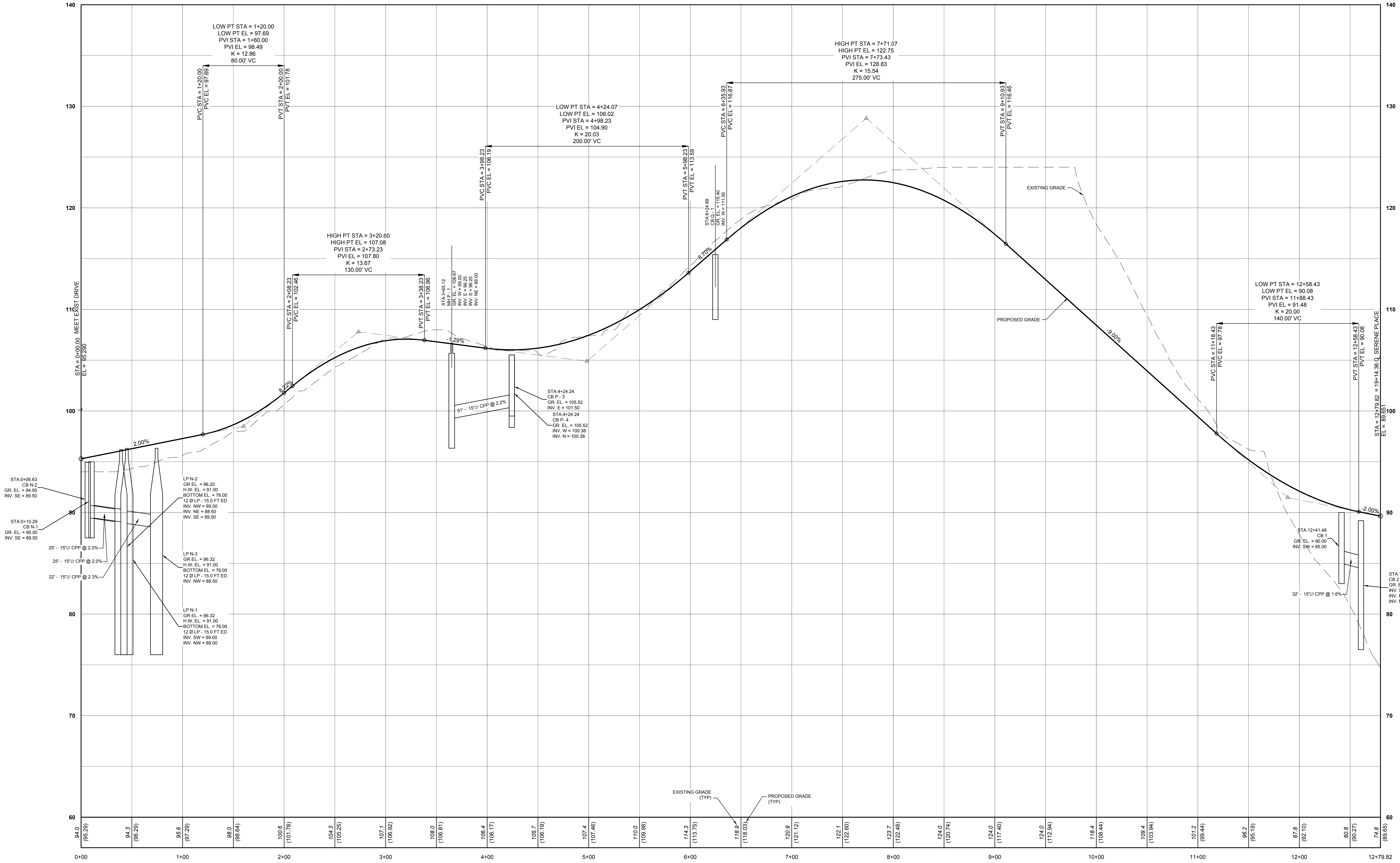
140
130
120
110
100
90
80
70
60
LOW PT STA = 1+20.00
LOW PT EL = 97.69
PVI STA = 1+60.00
PVI EL = 98.49
K = 12.86
80.00' VC
PVC STA = 1+20.00
PVC EL = 97.69
PVT STA = 2+00.00
PVT EL = 101.78
HIGH PT STA = 3+20.60
HIGH PT EL = 107.08
PVI STA = 2+73.23
PVI EL = 107.80
K = 13.67
130.00' VC
PVC STA = 2+08.23
PVC EL = 102.46
PVT STA = 3+38.23
PVT EL = 106.96
LOW PT STA = 4+24.07
LOW PT EL = 106.02
PVI STA = 4+98.23
PVI EL = 104.90
K = 20.03
200.00' VC
PVC STA = 3+98.23
PVC EL = 106.19
PVT STA = 5+98.23
PVT EL = 113.59
HIGH PT STA = 7+71.07
HIGH PT EL = 122.75
PVI STA = 7+73.43
PVI EL = 128.83
K = 15.54
275.00' VC
PVC STA = 6+35.93
PVC EL = 116.87
PVT STA = 9+10.93
PVT EL = 116.45
LOW PT STA = 12+58.43
LOW PT EL = 90.08
PVI STA = 11+88.43
PVI EL = 91.48
K = 20.00
140.00' VC
PVC STA = 11+18.43
PVC EL = 97.78
PVT STA = 12+58.43
PVT EL = 90.08
STA = 0+00.00 MEET EXIST DRIVE
EL = 95.290
STA = 12+79.82 = 19+14.36 ℄ SERENE PLACE
EL = 89.651
2.00%
8.22%
-1.29%
8.70%
-9.00%
-2.00%
STA:0+06.63
CB N-2
GR. EL. = 94.95
INV. SE = 89.50
STA:0+10.29
CB N-1
GR. EL. = 95.00
INV. SE = 89.50
25' - 15"∅ CPP @ 2.0%
25' - 15"∅ CPP @ 2.0%
22' - 15"∅ CPP @ 2.3%
LP N-2
GR EL. = 96.20
H.W. EL. = 91.00
BOTTOM EL. = 76.00
12 Ø LP - 15.0 FT ED
INV. NW = 89.00
INV. NE = 88.50
INV. SE = 89.00
LP N-3
GR EL. = 96.32
H.W. EL. = 91.00
BOTTOM EL. = 76.00
12 Ø LP - 15.0 FT ED
INV. NW = 88.50
LP N-1
GR EL. = 96.32
H.W. EL. = 91.00
BOTTOM EL. = 76.00
12 Ø LP - 15.0 FT ED
INV. SW = 89.00
INV. NW = 89.00
STA:3+65.12
MH P - 1
GR. EL. = 106.67
INV. W = 99.00
INV. E = 99.25
INV. S = 99.25
INV. NE = 99.00
51' - 15"∅ CPP @ 2.2%
STA:4+24.24
CB P - 3
GR. EL. = 105.52
INV. E = 101.50
STA:4+24.24
CB P- 4
GR. EL. = 105.52
INV. W = 100.38
INV. N = 100.38
STA:6+24.69
CB Q - 1
GR. EL. = 115.40
INV. W = 111.00
EXISTING GRADE
PROPOSED GRADE
STA:12+41.48
CB 1
GR. EL. = 90.00
INV. SW = 85.00
32' - 15"∅ CPP @ 1.6%
STA:12+60.67
CB 2
GR. EL. = 89.20
INV. SE = 78.80
INV. NE = 84.50
INV. NW = 78.50
EXISTING GRADE (TYP)
PROPOSED GRADE (TYP)
94.0 (95.29)
94.3 (96.29)
95.6 (97.29)
98.0 (98.64)
100.6 (101.78)
104.3 (105.25)
107.1 (106.92)
108.0 (106.81)
106.4 (106.17)
105.7 (106.19)
107.4 (107.46)
110.0 (109.98)
114.3 (113.75)
118.9 (118.03)
120.9 (121.12)
122.1 (122.60)
123.7 (122.48)
124.0 (120.74)
124.0 (117.40)
124.0 (112.94)
118.4 (108.44)
109.4 (103.94)
101.2 (99.44)
96.2 (95.19)
87.8 (92.10)
80.8 (90.27)
74.8 (89.65)
0+00
1+00
2+00
3+00
4+00
5+00
6+00
7+00
8+00
9+00
10+00
11+00
12+00
12+79.82

COUNTRY CLUB DRIVE

STA. 0+00.00 TO STA. 12+79.82

FOR TOWN USE

No.	REVISION	DATE

OWNER
I.H.C.C., INC. AND
ROBERG REVOCABLE TRUST
21 BREEZE HILL ROAD
NORTHPORT, NY, 11768
(631) 261 - 5700

APPLICANT:
THE PRESERVE AT INDIAN HILLS
1 RABRO DRIVE, SUITE 100
HAUPPAUGE, N.Y. 11788
(631) 351 - 4000

PROFILES 2
FOR
THE PRESERVE AT INDIAN HILLS
SITUATED AT
NORTHPORT
TOWN OF HUNTINGTON, SUFFOLK COUNTY, NEW YORK
S.C.T.M.: DISTRICT: 0400, SECT. 014, BLK. 04, LOTS 1 AND 2
DISTRICT 0400, SECT. 015, BLK. 01, LOTS 3.1, 3.2, 11, 12, 16, 19 AND P/O 22

THOMAS CHARLES DIXON

NELSON + POPE
engineers • architects • surveyors
70 Maxess Road, Melville, NY 11747 • 631.427.5665 • nelsonpope.com

DRAWN BY: GEO	CADD No.: 86047 CSP 2021.DWG	SCALE:	DRAWING NO.: C - 123
CHECKED BY: JM	FILE NO.: 400-014	1" VERT = 4' 1" HORZ = 40'	
DATE: OCTOBER, 2021	PROJECT NO.: 86047		SHEET NO.: 24 OF 44

SCALE: 1" VERT = 4'
0 4 6 10

SCALE: 1" HORZ = 40'
0 40 60 100

IT IS A VIOLATION OF NEW YORK STATE EDUCATION LAW ARTICLE 145, PROFESSIONAL ENGINEERING AND LAND SURVEYING, SECTION 7209 FOR ANY PERSON, UNLESS HE IS ACTING UNDER THE DIRECTION OF A LICENSED PROFESSIONAL ENGINEER OR LAND SURVEYOR, TO ALTER AN ITEM IN ANY WAY. IF AN ITEM BEARING THE SEAL OF AN ENGINEER OR LAND SURVEYOR IS ALTERED, THE ALTERING ENGINEER OR LAND SURVEYOR SHALL AFFIX TO THE ITEM HIS SEAL AND NOTATION "ALTERED BY" FOLLOWED BY HIS SIGNATURE AND THE DATE OF SUCH ALTERATION, AND SPECIFIC DESCRIPTION OF THE ALTERATION.

IT IS A VIOLATION OF NEW YORK STATE EDUCATION LAW ARTICLE 145, PROFESSIONAL ENGINEERING AND LAND SURVEYING, SECTION 7209 FOR ANY PERSON, UNLESS HE IS ACTING UNDER THE DIRECTION OF A LICENSED PROFESSIONAL ENGINEER OR LAND SURVEYOR, TO ALTER AN ITEM IN ANY WAY. IF AN ITEM BEARING THE SEAL OF AN ENGINEER OR LAND SURVEYOR IS ALTERED, THE ALTERING ENGINEER OR LAND SURVEYOR SHALL AFFIX TO THE ITEM HIS SEAL AND NOTATION "ALTERED BY" FOLLOWED BY HIS SIGNATURE AND THE DATE OF SUCH ALTERATION, AND SPECIFIC DESCRIPTION OF THE ALTERATION.

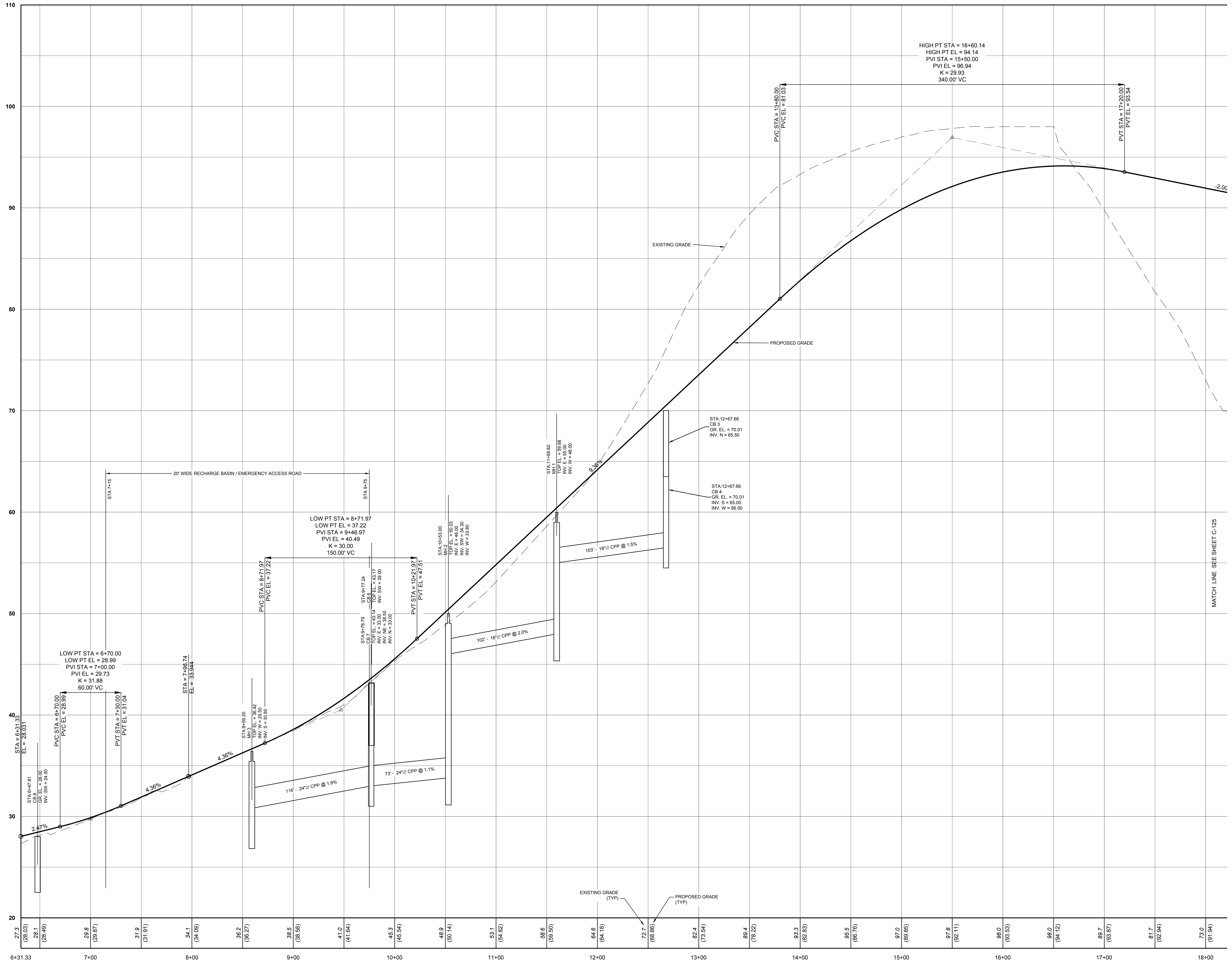
110
100
90
80
70
60
50
40
30
20
HIGH PT STA = 16+60.14
HIGH PT EL = 94.14
PVI STA = 15+50.00
PVI EL = 96.94
K = 29.93
340.00' VC
PVC STA = 13+80.00
PVC EL = 81.03
PVT STA = 17+20.00
PVT EL = 93.54
-2.00
EXISTING GRADE
PROPOSED GRADE
STA:12+67.66
CB 3
GR. EL. = 70.01
INV. N = 65.50
STA:12+67.66
CB 4
GR. EL. = 70.01
INV. S = 65.00
INV. W = 56.50
STA:11+59.82
MH 1
TOP EL. = 59.98
INV. E = 55.00
INV. W = 48.00
9.36%
103' - 18"∅ CPP @ 1.5%
MATCH LINE SEE SHEET C-125
20' WIDE RECHARGE BASIN / EMERGENCY ACCESS ROAD
STA 7+15
STA 9+75
LOW PT STA = 8+71.97
LOW PT EL = 37.22
PVI STA = 9+46.97
PVI EL = 40.49
K = 30.00
150.00' VC
PVC STA = 8+71.97
PVC EL = 37.22
PVT STA = 10+21.97
PVT EL = 47.51
STA:10+53.00
MH 2
TOP EL. = 50.03
INV. E = 46.00
INV. SW = 34.30
INV. W = 33.80
STA:9+77.24
CB 6
TOP EL. = 43.17
INV. SW = 39.00
STA:9+76.79
CB 7
TOP EL. = 43.14
INV. E = 33.00
INV. NE = 38.50
INV. N = 33.00
102' - 18"∅ CPP @ 2.0%
LOW PT STA = 6+70.00
LOW PT EL = 28.99
PVI STA = 7+00.00
PVI EL = 29.73
K = 31.88
60.00' VC
PVC STA = 6+70.00
PVC EL = 28.99
PVT STA = 7+30.00
PVT EL = 31.04
STA = 7+96.74
EL = 33.944
STA = 6+31.33
EL = 28.031
STA:6+47.81
CB 8
GR. EL. = 28.00
INV. SW = 24.50
STA:8+59.20
MH 3
TOP EL. = 36.42
INV. W = 29.50
INV. S = 30.80
2.47%
4.36%
4.36%
116' - 24"∅ CPP @ 1.9%
73' - 24"∅ CPP @ 1.1%
EXISTING GRADE (TYP)
PROPOSED GRADE (TYP)
27.3 (28.03)
28.1 (28.49)
29.8 (29.87)
31.9 (31.91)
34.1 (34.09)
36.2 (36.27)
38.5 (38.58)
41.0 (41.64)
45.3 (45.54)
48.9 (50.14)
53.1 (54.82)
58.6 (59.50)
64.6 (64.18)
72.7 (68.86)
82.4 (73.54)
89.4 (78.22)
93.3 (82.83)
95.5 (86.76)
97.0 (89.85)
97.8 (92.11)
98.0 (93.53)
98.0 (94.12)
89.7 (93.87)
81.7 (92.94)
73.0 (91.94)
6+31.33
7+00
8+00
9+00
10+00
11+00
12+00
13+00
14+00
15+00
16+00
17+00
18+00

SERENE PLACE

STA. 6+31.33 TO STA. 23+14.15

SCALE: 1" VERT = 4'

0 4 6 10

SCALE: 1" HORZ = 40'

0 40 60 100

FOR TOWN USE

No.	REVISION	DATE

OWNER
I.H.C.C., INC. AND
ROBERG REVOCABLE TRUST
21 BREEZE HILL ROAD
NORTHPORT, NY, 11768
(631) 261 - 5700

APPLICANT:
THE PRESERVE AT INDIAN HILLS
1 RABRO DRIVE, SUITE 100
HAUPPAUGE, N.Y. 11788
(631) 351 - 4000

PROFILES 3
FOR
THE PRESERVE AT INDIAN HILLS
SITUATED AT
NORTHPORT
TOWN OF HUNTINGTON, SUFFOLK COUNTY, NEW YORK
S.C.T.M.: DISTRICT: 0400, SECT. 014, BLK. 04, LOTS 1 AND 2
DISTRICT 0400, SECT. 015, BLK. 01, LOTS 3.1, 3.2, 11, 12, 16, 19 AND P/O 22

080911

NELSON + POPE
engineers • architects • surveyors
70 Maxess Road, Melville, NY 11747 • 631.427.5665 • nelsonpope.com

DRAWN BY: GEO	CADD No.: 86047 CSP 2021.DWG	SCALE:	DRAWING NO.:
CHECKED BY: JM	FILE NO.: 400-014	1" VERT = 4' 1" HORZ = 40'	C - 124
DATE: OCTOBER, 2021	PROJECT NO.: 86047		SHEET NO.: 25 OF 44

G:\projects\86047\FINALS\CONDOMINIUM\86047 CSP 2021.dwg, 25 OF 44 PROFILES 3, 10/11/2021 2:38:23 PM

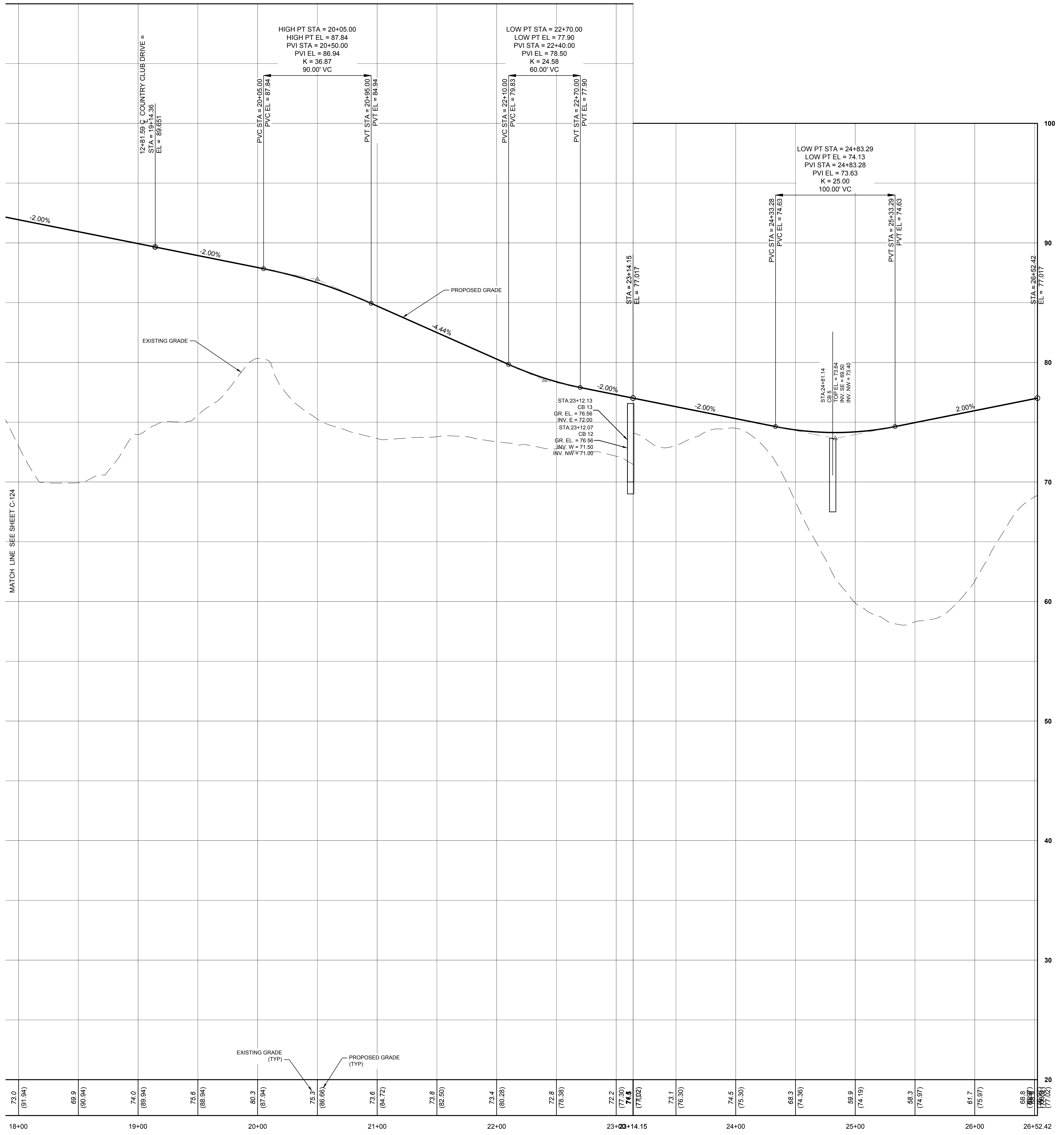
MATCH LINE SEE SHEET C-124
12+81.59 ℄ COUNTRY CLUB DRIVE =
STA = 19+14.36
EL = 89.651
HIGH PT STA = 20+05.00
HIGH PT EL = 87.84
PVI STA = 20+50.00
PVI EL = 86.94
K = 36.87
90.00' VC
PVC STA = 20+05.00
PVC EL = 87.84
PVT STA = 20+95.00
PVT EL = 84.94
LOW PT STA = 22+70.00
LOW PT EL = 77.90
PVI STA = 22+40.00
PVI EL = 78.50
K = 24.58
60.00' VC
PVC STA = 22+10.00
PVC EL = 79.83
PVT STA = 22+70.00
PVT EL = 77.90
STA = 23+14.15
EL = 77.017
-2.00%
-2.00%
-4.44%
-2.00%
PROPOSED GRADE
EXISTING GRADE
STA:23+12.13
CB 13
GR. EL. = 76.56
INV. E = 72.00
STA:23+12.07
CB 12
GR. EL. = 76.56
INV. W = 71.50
INV. NW = 71.00
LOW PT STA = 24+83.29
LOW PT EL = 74.13
PVI STA = 24+83.28
PVI EL = 73.63
K = 25.00
100.00' VC
PVC STA = 24+33.28
PVC EL = 74.63
PVT STA = 25+33.29
PVT EL = 74.63
STA:24+81.14
CB 5
TOP EL. = 73.64
INV. SE = 69.50
INV. NW = 73.40
-2.00%
2.00%
STA = 26+52.42
EL = 77.017
100
90
80
70
60
50
40
30
20
EXISTING GRADE (TYP)
PROPOSED GRADE (TYP)
73.0 (91.94)
69.9 (90.94)
74.0 (89.94)
75.6 (88.94)
80.3 (87.94)
75.3 (86.66)
73.6 (84.72)
73.8 (82.50)
73.4 (80.28)
72.8 (78.38)
72.2 (77.30)
74.5 (77.02)
73.1 (76.30)
74.5 (75.30)
68.3 (74.36)
59.9 (74.19)
58.3 (74.97)
61.7 (75.97)
68.8 (77.02)
18+00
19+00
20+00
21+00
22+00
23+00
23+14.15
24+00
25+00
26+00
26+52.42

VALLEY PLACE
STA 18+00 TO STA 23+14.15

SERENE PLACE CDS
STA. 23+14.15 TO STA. 26+52.42

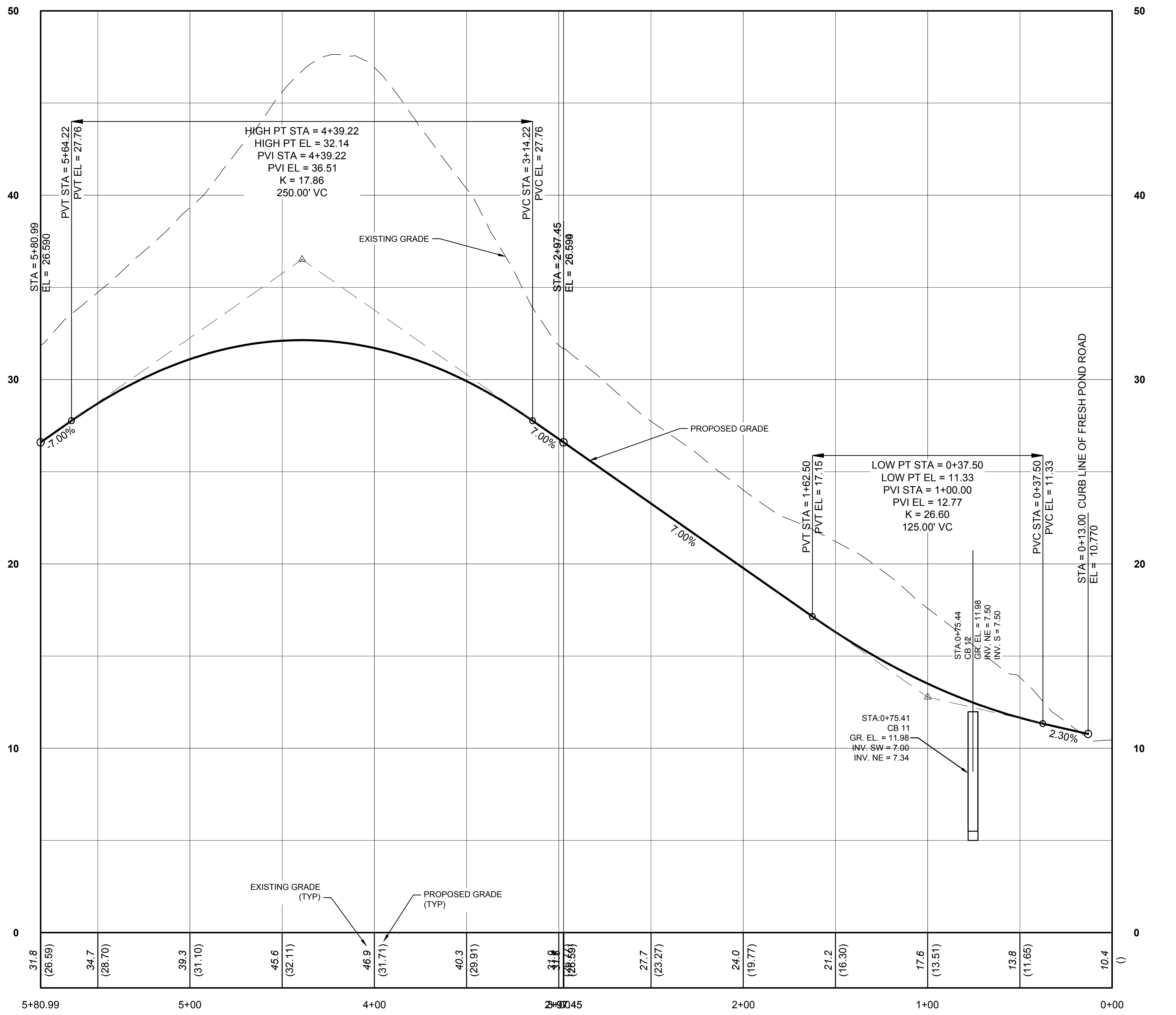
50
40
30
20
10
0
STA = 5+80.99
EL = 26.590
PVT STA = 5+64.22
PVT EL = 27.76
HIGH PT STA = 4+39.22
HIGH PT EL = 32.14
PVI STA = 4+39.22
PVI EL = 36.51
K = 17.86
250.00' VC
PVC STA = 3+14.22
PVC EL = 27.76
STA = 2+97.45
EL = 26.590
EXISTING GRADE
PROPOSED GRADE
-7.00%
7.00%
7.00%
LOW PT STA = 0+37.50
LOW PT EL = 11.33
PVI STA = 1+00.00
PVI EL = 12.77
K = 26.60
125.00' VC
PVT STA = 1+62.50
PVT EL = 17.15
PVC STA = 0+37.50
PVC EL = 11.33
STA = 0+13.00 CURB LINE OF FRESH POND ROAD
EL = 10.770
STA:0+75.44
CB 12
GR. EL. = 11.98
INV. NE = 7.50
INV. S = 7.50
STA:0+75.41
CB 11
GR. EL. = 11.98
INV. SW = 7.00
INV. NE = 7.34
2.30%
EXISTING GRADE (TYP)
PROPOSED GRADE (TYP)
31.8 (26.59)
34.7 (28.70)
39.3 (31.10)
45.6 (32.11)
46.9 (31.71)
40.3 (29.91)
31.9 (26.59)
27.7 (23.27)
24.0 (19.77)
21.2 (16.30)
17.6 (13.51)
13.8 (11.65)
10.4 ()
5+80.99
5+00
4+00
2+97.45
2+00
1+00
0+00

OVERLOOK PATH CDS
STA. 2+97.45 TO STA. 5+80.99

OVERLOOK PATH
STA. 0+00.00 TO STA. 2+97.45

SCALE: 1" VERT = 4'
0 4 6 10

SCALE: 1" HORZ = 40'
0 40 60 100

FOR TOWN USE

No.	REVISION	DATE

OWNER
I.H.C.C., INC. AND
ROBERG REVOCABLE TRUST
21 BREEZE HILL ROAD
NORTHPORT, NY, 11768
(631) 261 - 5700

APPLICANT:
THE PRESERVE AT INDIAN HILLS
1 RABRO DRIVE, SUITE 100
HAUPPAUGE, N.Y. 11788
(631) 351 - 4000

PROFILES 4
FOR
THE PRESERVE AT INDIAN HILLS
SITUATED AT
NORTHPORT
TOWN OF HUNTINGTON, SUFFOLK COUNTY, NEW YORK
S.C.T.M.: DISTRICT: 0400, SECT. 014, BLK. 04, LOTS 1 AND 2
DISTRICT 0400, SECT. 015, BLK. 01, LOTS 3.1, 3.2, 11, 12, 16, 19 AND P/O 22

STATE OF NEW YORK
THOMAS CHARLES DIXON
080919
LICENSED PROFESSIONAL ENGINEER

NELSON + POPE
engineers • architects • surveyors
70 Maxess Road, Melville, NY 11747 • 631.427.5665 • nelsonpope.com

DRAWN BY: GEO	CADD No.: 86047 CSP 2021.DWG	SCALE:	DRAWING NO.:
CHECKED BY: JM	FILE NO.: 400-014	1" VERT = 4' 1" HORZ = 40'	C - 125
DATE: OCTOBER, 2021	PROJECT NO.: 86047		SHEET NO.: 26 OF 44

IT IS A VIOLATION OF NEW YORK STATE EDUCATION LAW ARTICLE 145, PROFESSIONAL ENGINEERING AND LAND SURVEYING, SECTION 7209 FOR ANY PERSON, UNLESS HE IS ACTING UNDER THE DIRECTION OF A LICENSED PROFESSIONAL ENGINEER OR LAND SURVEYOR, TO ALTER AN ITEM IN ANY WAY. IF AN ITEM BEARING THE SEAL OF AN ENGINEER OR LAND SURVEYOR IS ALTERED, THE ALTERING ENGINEER OR LAND SURVEYOR SHALL AFFIX TO THE ITEM HIS SEAL AND NOTATION "ALTERED BY" FOLLOWED BY HIS SIGNATURE AND THE DATE OF SUCH ALTERATION, AND SPECIFIC DESCRIPTION OF THE ALTERATION.

G:\projects\86047\FINALS\CONDOMINIUM\86047 CSP 2021.dwg, 26 OF 44 PROFILES 4, 10/11/2021 2:39:13 PM

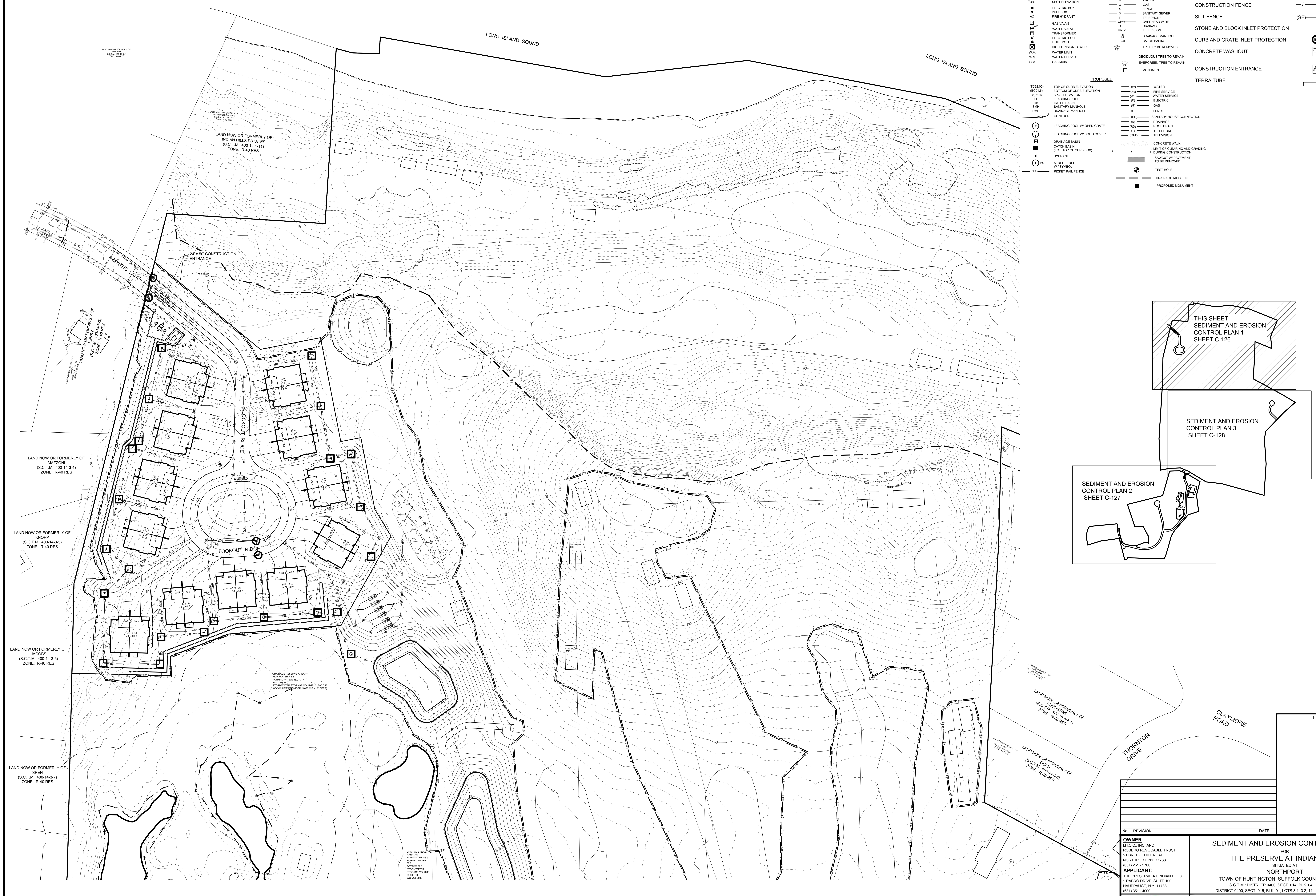
LONG ISLAND SOUND
LONG ISLAND SOUND
LAND NOW OR FORMERLY OF MAZZONI (S.C.T.M. 400-14-3-4) ZONE: R-40 RES
LAND NOW OR FORMERLY OF INDIAN HILLS ESTATES (S.C.T.M. 400-14-1-11) ZONE: R-40 RES
LAND NOW OR FORMERLY OF HENRY (S.C.T.M. 400-14-3-3) ZONE: R-40 RES
LAND NOW OR FORMERLY OF MAZZONI (S.C.T.M. 400-14-3-4) ZONE: R-40 RES
LAND NOW OR FORMERLY OF KNOPP (S.C.T.M. 400-14-3-5) ZONE: R-40 RES
LAND NOW OR FORMERLY OF JACOBS (S.C.T.M. 400-14-3-6) ZONE: R-40 RES
LAND NOW OR FORMERLY OF SPEN (S.C.T.M. 400-14-3-7) ZONE: R-40 RES
LAND NOW OR FORMERLY OF AUGUSTINE (S.C.T.M. 400-14-4-4.1) ZONE: R-40 RES
LAND NOW OR FORMERLY OF GUAN (S.C.T.M. 400-14-4-5) ZONE: R-40 RES
MYSTIC LANE
LOOKOUT RIDGE
LOOKOUT RIDGE
THORNTON DRIVE
CLAYMORE ROAD
24' x 50' CONSTRUCTION ENTRANCE
PROPOSED RPZ
DRAINAGE RESERVE AREA 'A'
HIGH WATER: 43.5
NORMAL WATER: 38.0
BOTTOM 37.0
STORMWATER STORAGE VOLUME: 51,000 C.F.
WQ VOLUME PROVIDED: 5,670 C.F. (1.0' DEEP)
DRAINAGE RESERVE AREA 'AA'
HIGH WATER: 43.5
NORMAL WATER: 38.0
BOTTOM 37.0
STORMWATER STORAGE VOLUME: 96,000 C.F.
WQ VOLUME
THIS SHEET SEDIMENT AND EROSION CONTROL PLAN 1 SHEET C-126
SEDIMENT AND EROSION CONTROL PLAN 2 SHEET C-127
SEDIMENT AND EROSION CONTROL PLAN 3 SHEET C-128

EXISTING

P92.59	PAVEMENT ELEVATION
TC92.59	TOP OF CURB ELEVATION
BC92.2	BOTTOM OF CURB ELEVATION
X92.0	SPOT ELEVATION
⊠	ELECTRIC BOX
⧅	PULL BOX
	FIRE HYDRANT
G	GAS VALVE
WV	WATER VALVE
T	TRANSFORMER
	ELECTRIC POLE
✡	LIGHT POLE
⊠	HIGH TENSION TOWER
W.M.	WATER MAIN
W.S.	WATER SERVICE
G.M.	GAS MAIN
94	CONTOUR
E	ELECTRIC
W	WATER
G	GAS
X	FENCE
S	SANITARY SEWER
T	TELEPHONE
OHW	OVERHEAD WIRE
D	DRAINAGE
CATV	TELEVISION
◎	DRAINAGE MANHOLE
▦	CATCH BASINS
✷	TREE TO BE REMOVED
	DECIDUOUS TREE TO REMAIN
✷	EVERGREEN TREE TO REMAIN
□	MONUMENT

PROPOSED

(TC92.00)	TOP OF CURB ELEVATION
(BC91.5)	BOTTOM OF CURB ELEVATION
x(92.0)	SPOT ELEVATION
LP	LEACHING POOL
CB	CATCH BASIN
SMH	SANITARY MANHOLE
DMH	DRAINAGE MANHOLE
(93)	CONTOUR
◉	LEACHING POOL W/ OPEN GRATE
○	LEACHING POOL W/ SOLID COVER
▣	DRAINAGE BASIN
■	CATCH BASIN (TC ~ TOP OF CURB BOX)
	HYDRANT
⊕ PS	STREET TREE W / SYMBOL
(PR)	PICKET RAIL FENCE
(W)	WATER
(FS)	FIRE SERVICE
(WS)	WATER SERVICE
(E)	ELECTRIC
(G)	GAS
X	FENCE
(HC)	SANITARY HOUSE CONNECTION
(D)	DRAINAGE
(RD)	ROOF DRAIN
(T)	TELEPHONE
(CATV)	TELEVISION
▨	CONCRETE WALK
/ —— / —— /	LIMIT OF CLEARING AND GRADING DURING CONSTRUCTION
▨	SAWCUT W/ PAVEMENT TO BE REMOVED
⊕	TEST HOLE
— — —	DRAINAGE RIDGELINE
■	PROPOSED MONUMENT

EROSION CONTROL MEASURES LEGEND

CONSTRUCTION FENCE	—/—/—/—
SILT FENCE	(SF)——(SF)——(SF)
STONE AND BLOCK INLET PROTECTION	▣
CURB AND GRATE INLET PROTECTION	▦
CONCRETE WASHOUT	▨
CONSTRUCTION ENTRANCE	▨
TERRA TUBE	

IT IS A VIOLATION OF NEW YORK STATE EDUCATION LAW ARTICLE 145, PROFESSIONAL ENGINEERING AND LAND SURVEYING, SECTION 7209 FOR ANY PERSON, UNLESS HE IS ACTING UNDER THE DIRECTION OF A LICENSED PROFESSIONAL ENGINEER OR LAND SURVEYOR, TO ALTER AN ITEM IN ANY WAY. IF AN ITEM BEARING THE SEAL OF AN ENGINEER OR LAND SURVEYOR IS ALTERED, THE ALTERING ENGINEER OR LAND SURVEYOR SHALL AFFIX TO THE ITEM HIS SEAL AND NOTATION "ALTERED BY" FOLLOWED BY HIS SIGNATURE AND THE DATE OF SUCH ALTERATION, AND SPECIFIC DESCRIPTION OF THE ALTERATION.

FOR TOWN USE

No.	REVISION	DATE

OWNER
I.H.C.C., INC. AND
ROBERG REVOCABLE TRUST
21 BREEZE HILL ROAD
NORTHPORT, NY, 11768
(631) 261 - 5700

APPLICANT:
THE PRESERVE AT INDIAN HILLS
1 RABRO DRIVE, SUITE 100
HAUPPAUGE, N.Y. 11788
(631) 351 - 4000

SEDIMENT AND EROSION CONTROL PLAN 1
FOR
THE PRESERVE AT INDIAN HILLS
SITUATED AT
NORTHPORT
TOWN OF HUNTINGTON, SUFFOLK COUNTY, NEW YORK
S.C.T.M.: DISTRICT: 0400, SECT. 014, BLK. 04, LOTS 1 AND 2
DISTRICT 0400, SECT. 015, BLK. 01, LOTS 3.1, 3.2, 11, 12, 16, 19 AND P/O 22

THOMAS CHARLES DIXON 080915

NELSON + POPE
engineers • architects • surveyors
70 Maxess Road, Melville, NY 11747 • 631.427.5665 • nelsonpope.com

DRAWN BY: GEO	CADD No.: 86047 CSP 2021 ERO&LA.DWG	SCALE: 1"=60'	DRAWING NO.: C - 126
CHECKED BY: JM	FILE NO.: 400-014		
DATE: OCTOBER, 2021	PROJECT NO.: 86047		SHEET NO.: 27 OF 44

G:\projects\86047\FINALS\CONDOMINIUM\86047 CSP 2021 ERO&LA.dwg, 27 OF 44 SEDIMENT AND EROSION CONTROL PLAN 1, 10/11/2021 2:50:57 PM

SEDIMENT AND EROSION CONTROL PLAN 1 SHEET C-126
SEDIMENT AND EROSION CONTROL PLAN 3 SHEET C-128
THIS SHEET SEDIMENT AND EROSION CONTROL PLAN 2 SHEET C-127
BREEZE HILL ROAD
24' x 50' CONSTRUCTION ENTRANCE
COUNTRY CLUB DRIVE
PROPOSED CLUBHOUSE
SERENE PLACE
MAKAMAH ROAD
GREEN KNOLL COURT
N
E
S
W
(7) LAND NOW OR FORMERLY OF LEWIS (S.C.T.M. 400-15-1-5) ZONE: R-40 RES
LAND NOW OR FORMERLY OF CLEERE (S.C.T.M. 400-15-1-6) ZONE: R-40 RES
LAND NOW OR FORMERLY OF CAMERON (S.C.T.M. 400-15-1-7) ZONE: R-40 RES
LAND NOW OR FORMERLY OF RONDINONE (S.C.T.M. 400-15-1-8) ZONE: R-40 RES
LAND NOW OR FORMERLY OF MONTIGLIO (S.C.T.M. 400-15-1-9) ZONE: R-40 RES
LAND NOW OR FORMERLY OF (S.C.T.M. 400-15-1-10) ZONE: R-40 RES
LAND NOW OR FORMERLY OF EMORY REVOCABLE LIVING TRUST (S.C.T.M. 400-15-1-1) ZONE: R-40 RES
LAND NOW OR FORMERLY OF ROBERG REVOCABLE LIVING TRUST (S.C.T.M. 400-15-1-2.1) ZONE: R-40 RES
(4) LAND NOW OR FORMERLY OF UNKNOWN OWNER (S.C.T.M. 400-15-1-22) ZONE: R-40 RES
(5) LAND NOW OR FORMERLY OF FEDERICO (S.C.T.M. 400-15-1-4) ZONE: R-40 RES
(2) LAND NOW OR FORMERLY OF BUBARIS (S.C.T.M. 400-15-1-17) ZONE: R-40 RES
(3) LAND NOW OR FORMERLY OF BERG (S.C.T.M. 400-15-1-18) ZONE: R-40 RES
(1) LAND NOW OR FORMERLY OF JEROME (S.C.T.M. 400-15-1-20) ZONE: R-40 RES
LAND NOW OR FORMERLY OF MARTINO (S.C.T.M. 400-15-1-13) ZONE: R-40 RES
LAND NOW OR FORMERLY OF MATTUTAT (S.C.T.M. 400-15-2-17) ZONE: R-40 RES
LAND NOW OR FORMERLY OF GREENFIELD (S.C.T.M. 400-15-1-14) ZONE: R-40 RES
LAND NOW OR FORMERLY OF SHAMPINATO (S.C.T.M. 400-15-1-15) ZONE: R-40 RES
LAND NOW OR FORMERLY OF BOZZELLA (S.C.T.M. 400-15-3-8.2) ZONE: R-40 RES
LAND NOW OR FORMERLY OF DANTONI (S.C.T.M. 400-15-3-31.16) ZONE: R-40 RES
DRAINAGE RESERVE AREA 'J'
HIGH WATER: 32.0
NORMAL WATER: 29.0
BOTTOM 28.0
STORMWATER STORAGE VOLUME: 113,450 C.F.
WQ VOLUME PROVIDED: 31,400 C.F. (1' DEEP)
HIGH WATER 28.0
BOTTOM 23.0
VOLUME 76,000 CF
HIGH WATER 40.0
BOTTOM 36.0
VOLUME 7,700 CF
2+00
2+39.61
FOR TOWN USE

EROSION CONTROL MEASURES LEGEND

CONSTRUCTION FENCE	— / —— / —— / ——
SILT FENCE	(SF)——(SF)——(SF)
STONE AND BLOCK INLET PROTECTION	▣
CURB AND GRATE INLET PROTECTION	⯃
CONCRETE WASHOUT	▤
CONSTRUCTION ENTRANCE	▨
TERRA TUBE	▭

EXISTING

P92.59	PAVEMENT ELEVATION	·····94·····	CONTOUR
TC92.59	TOP OF CURB ELEVATION	—— E ——	ELECTRIC
BC92.2	BOTTOM OF CURB ELEVATION	—— W ——	WATER
X92.0	SPOT ELEVATION	—— G ——	GAS
⊠	ELECTRIC BOX	—— X ——	FENCE
⊠	PULL BOX	—— S ——	SANITARY SEWER
	FIRE HYDRANT	—— T ——	TELEPHONE
G	GAS VALVE	—— OHW ——	OVERHEAD WIRE
WV	WATER VALVE	—— D ——	DRAINAGE
T	TRANSFORMER	—— CATV ——	TELEVISION
	ELECTRIC POLE		DRAINAGE MANHOLE
✡	LIGHT POLE	▦	CATCH BASINS
⊠	HIGH TENSION TOWER	✴	TREE TO BE REMOVED
W.M.	WATER MAIN		DECIDUOUS TREE TO REMAIN
W.S.	WATER SERVICE	✴	EVERGREEN TREE TO REMAIN
G.M.	GAS MAIN	□	MONUMENT

PROPOSED

(TC92.00)	TOP OF CURB ELEVATION	—— (W) ——	WATER
(BC91.5)	BOTTOM OF CURB ELEVATION	—— (FS) ——	FIRE SERVICE
x(92.0)	SPOT ELEVATION	—— (WS) ——	WATER SERVICE
LP	LEACHING POOL	—— (E) ——	ELECTRIC
CB	CATCH BASIN	—— (G) ——	GAS
SMH	SANITARY MANHOLE	—— X ——	FENCE
DMH	DRAINAGE MANHOLE	—— (HC) ——	SANITARY HOUSE CONNECTION
——(93)——	CONTOUR	—— (D) ——	DRAINAGE
⊜	LEACHING POOL W/ OPEN GRATE	—— (RD) ——	ROOF DRAIN
○	LEACHING POOL W/ SOLID COVER	—— (T) ——	TELEPHONE
▣	DRAINAGE BASIN	—— (CATV) ——	TELEVISION
■	CATCH BASIN (TC ~ TOP OF CURB BOX)		CONCRETE WALK
	HYDRANT	/ —— / —— /	LIMIT OF CLEARING AND GRADING DURING CONSTRUCTION
⊕ PS	STREET TREE W / SYMBOL	▬	SAWCUT W/ PAVEMENT TO BE REMOVED
—— (PR) ——	PICKET RAIL FENCE	⊕	TEST HOLE
		▬ ▬ ▬	DRAINAGE RIDGELINE
		■	PROPOSED MONUMENT

IT IS A VIOLATION OF NEW YORK STATE EDUCATION LAW ARTICLE 145, PROFESSIONAL ENGINEERING AND LAND SURVEYING, SECTION 7209 FOR ANY PERSON, UNLESS HE IS ACTING UNDER THE DIRECTION OF A LICENSED PROFESSIONAL ENGINEER OR LAND SURVEYOR, TO ALTER AN ITEM IN ANY WAY. IF AN ITEM BEARING THE SEAL OF AN ENGINEER OR LAND SURVEYOR IS ALTERED, THE ALTERING ENGINEER OR LAND SURVEYOR SHALL AFFIX TO THE ITEM HIS SEAL AND NOTATION "ALTERED BY" FOLLOWED BY HIS SIGNATURE AND THE DATE OF SUCH ALTERATION, AND SPECIFIC DESCRIPTION OF THE ALTERATION.

No.	REVISION	DATE

OWNER
I.H.C.C., INC. AND
ROBERG REVOCABLE TRUST
21 BREEZE HILL ROAD
NORTHPORT, NY, 11768
(631) 261 - 5700

APPLICANT:
THE PRESERVE AT INDIAN HILLS
1 RABRO DRIVE, SUITE 100
HAUPPAUGE, N.Y. 11788
(631) 351 - 4000

SEDIMENT AND EROSION CONTROL PLAN 2
FOR
THE PRESERVE AT INDIAN HILLS
SITUATED AT
NORTHPORT
TOWN OF HUNTINGTON, SUFFOLK COUNTY, NEW YORK
S.C.T.M.: DISTRICT: 0400, SECT. 014, BLK. 04, LOTS 1 AND 2
DISTRICT 0400, SECT. 015, BLK. 01, LOTS 3.1, 3.2, 11, 12, 16, 19 AND P/O 22

THOMAS CHARLES DIXON
080916

NELSON + POPE
engineers • architects • surveyors
70 Maxess Road, Melville, NY 11747 • 631.427.5665 • nelsonpope.com

DRAWN BY: GEO	CADD No.: 86047 CSP 2021 ERO&LA.DWG	SCALE: 1"=60'	DRAWING NO.: C - 127
CHECKED BY: JM	FILE NO.: 400-014		
DATE: OCTOBER, 2021	PROJECT NO.: 86047		SHEET NO.: 28 OF 44

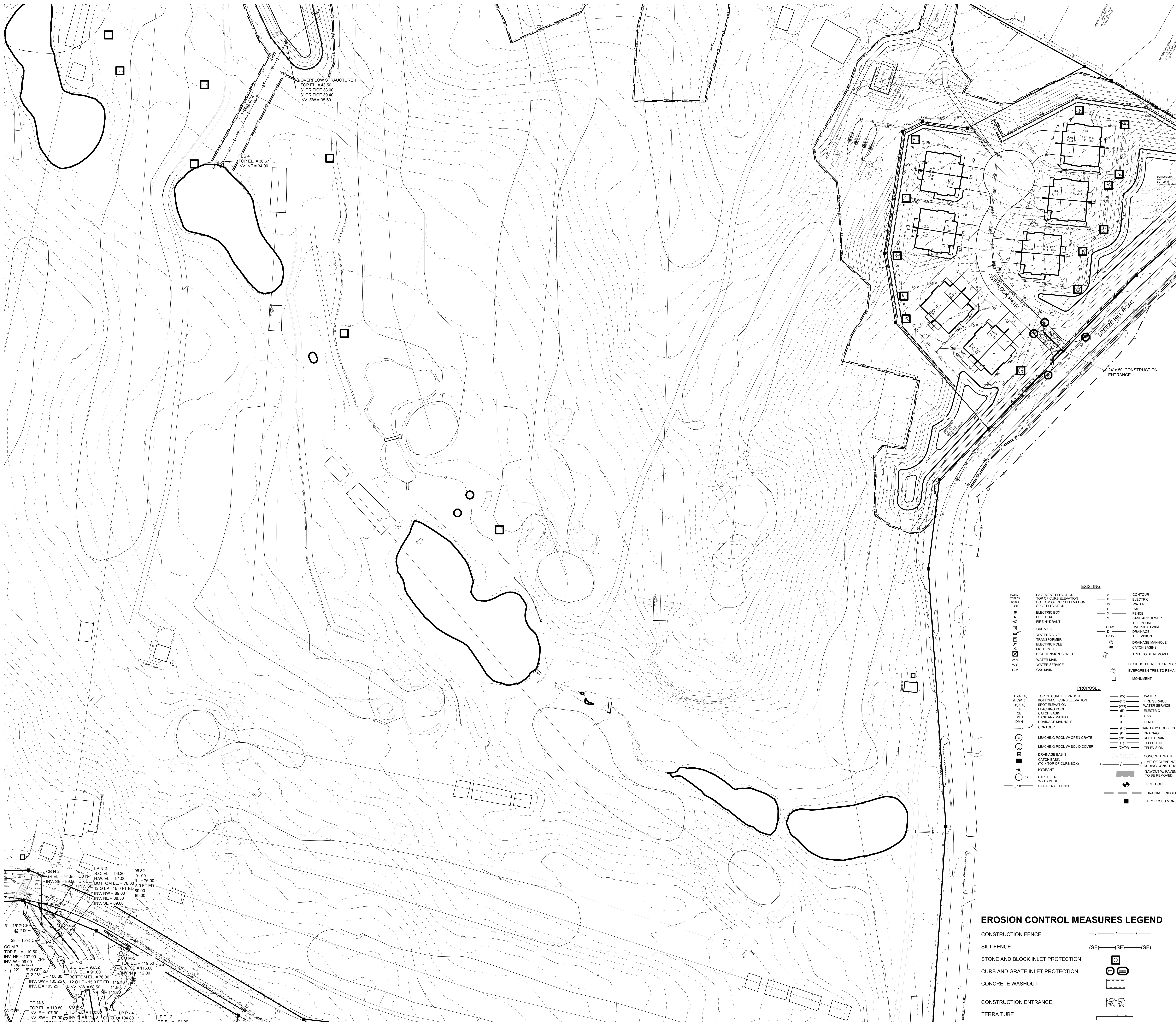
OVERFLOW STRAUCTURE 1
TOP EL. = 43.50
3" ORIFICE 38.00
8" ORIFICE 39.40
INV. SW = 35.60
FES 4
TOP EL. = 36.67
INV. NE = 34.00
1+00
2+00
OVERLOOK PATH
BREEZE HILL ROAD
24' x 50' CONSTRUCTION ENTRANCE
CB N-2
GR EL. = 94.95
INV. SE = 89.50
CB N-1
LP N-2
S.C. EL. = 96.20
H.W. EL. = 91.00
BOTTOM EL. = 76.00
12 Ø LP - 15.0 FT ED
INV. NW = 89.00
INV. NE = 88.50
INV. SE = 89.00
LP N-3
S.C. EL. = 96.32
H.W. EL. = 91.00
BOTTOM EL. = 76.00
12 Ø LP - 15.0 FT ED
INV. NW = 88.50
CO M-7
TOP EL. = 110.50
INV. NE = 107.00
INV. W = 99.00
25' - 15"∅ CPP
@ 2.00%
28' - 15"∅ CPP
22' - 15"∅ CPP
@ 2.26%
27' - 15"∅ CPP
@ 1.86%
INV. SW = 105.25
INV. E = 105.25
CO M-3
TOP EL. = 119.50
INV. SE = 116.00
INV. N = 112.00
CO M-6
TOP EL. = 110.80
INV. E = 107.90
INV. SW = 107.90
CO M-5
TOP EL. = 116.00
INV. S = 111.50
LP P - 4
GR EL. = 104.80
LP P - 2

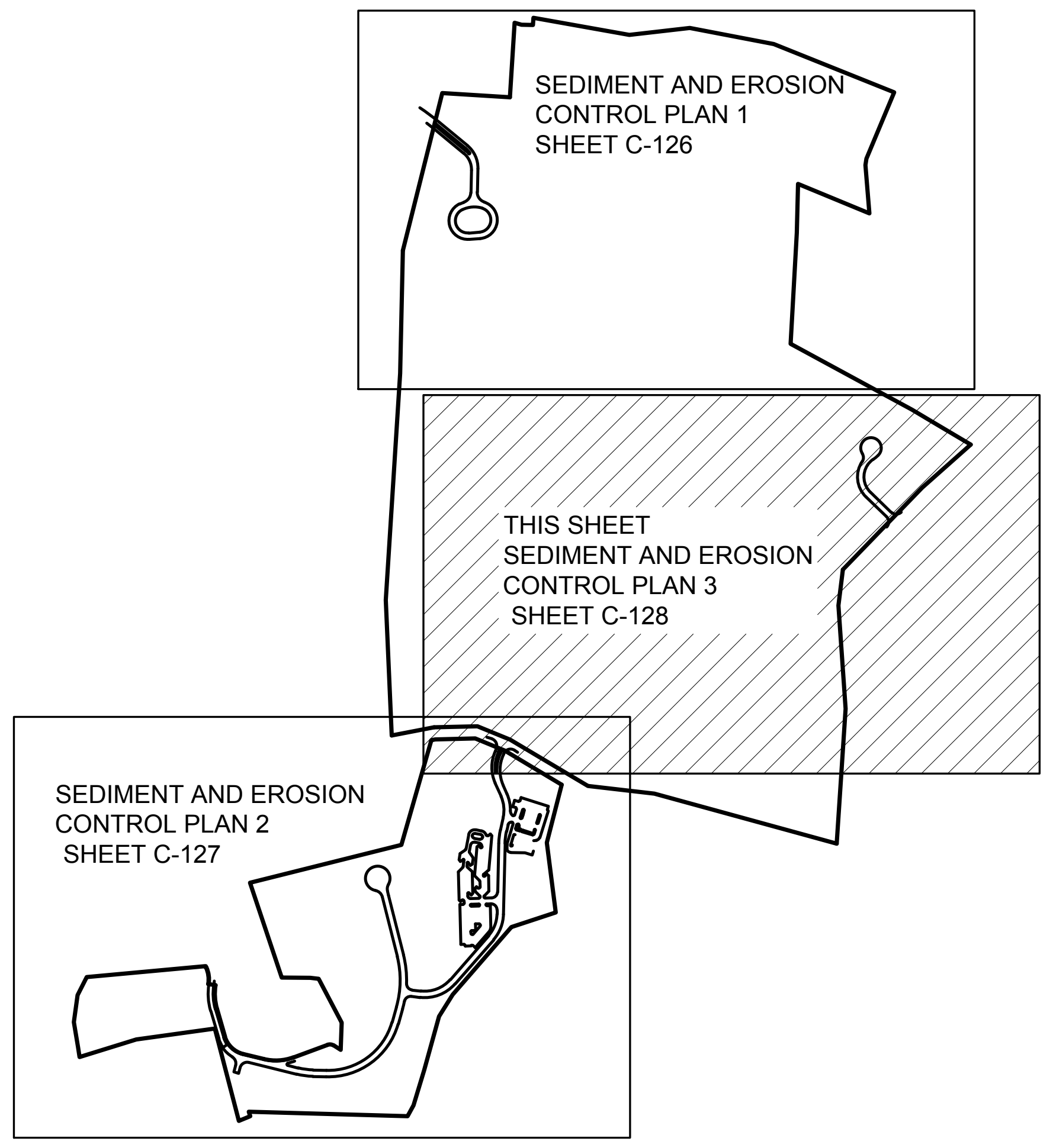
SEDIMENT AND EROSION CONTROL PLAN 1 SHEET C-126
THIS SHEET SEDIMENT AND EROSION CONTROL PLAN 3 SHEET C-128
SEDIMENT AND EROSION CONTROL PLAN 2 SHEET C-127

EXISTING

P92.59	PAVEMENT ELEVATION	94	CONTOUR
TC92.59	TOP OF CURB ELEVATION	E	ELECTRIC
BC92.2	BOTTOM OF CURB ELEVATION	W	WATER
X92.0	SPOT ELEVATION	G	GAS
⊠	ELECTRIC BOX	X	FENCE
⧅	PULL BOX	S	SANITARY SEWER
	FIRE HYDRANT	T	TELEPHONE
G	GAS VALVE	OHW	OVERHEAD WIRE
WV	WATER VALVE	D	DRAINAGE
T	TRANSFORMER	CATV	TELEVISION
	ELECTRIC POLE		DRAINAGE MANHOLE
✡	LIGHT POLE		CATCH BASINS
☒	HIGH TENSION TOWER		TREE TO BE REMOVED
W.M.	WATER MAIN		DECIDUOUS TREE TO REMAIN
W.S.	WATER SERVICE		EVERGREEN TREE TO REMAIN
G.M.	GAS MAIN	☐	MONUMENT

PROPOSED

(TC92.00)	TOP OF CURB ELEVATION	(W)	WATER
(BC91.5)	BOTTOM OF CURB ELEVATION	(FS)	FIRE SERVICE
x(92.0)	SPOT ELEVATION	(WS)	WATER SERVICE
LP	LEACHING POOL	(E)	ELECTRIC
CB	CATCH BASIN	(G)	GAS
SMH	SANITARY MANHOLE	X	FENCE
DMH	DRAINAGE MANHOLE	(HC)	SANITARY HOUSE CONNECTION
(93)	CONTOUR	(D)	DRAINAGE
⊜	LEACHING POOL W/ OPEN GRATE	(RD)	ROOF DRAIN
○	LEACHING POOL W/ SOLID COVER	(T)	TELEPHONE
▣	DRAINAGE BASIN	(CATV)	TELEVISION
■	CATCH BASIN (TC ~ TOP OF CURB BOX)		CONCRETE WALK
	HYDRANT	/ / /	LIMIT OF CLEARING AND GRADING DURING CONSTRUCTION
⊕ PS	STREET TREE W / SYMBOL	▨	SAWCUT W/ PAVEMENT TO BE REMOVED
(PR)	PICKET RAIL FENCE		TEST HOLE
			DRAINAGE RIDGELINE
		■	PROPOSED MONUMENT

IT IS A VIOLATION OF NEW YORK STATE EDUCATION LAW ARTICLE 145, PROFESSIONAL ENGINEERING AND LAND SURVEYING, SECTION 7209 FOR ANY PERSON, UNLESS HE IS ACTING UNDER THE DIRECTION OF A LICENSED PROFESSIONAL ENGINEER OR LAND SURVEYOR, TO ALTER AN ITEM IN ANY WAY. IF AN ITEM BEARING THE SEAL OF AN ENGINEER OR LAND SURVEYOR IS ALTERED, THE ALTERING ENGINEER OR LAND SURVEYOR SHALL AFFIX TO THE ITEM HIS SEAL AND NOTATION "ALTERED BY" FOLLOWED BY HIS SIGNATURE AND THE DATE OF SUCH ALTERATION, AND SPECIFIC DESCRIPTION OF THE ALTERATION.

FOR TOWN USE

EROSION CONTROL MEASURES LEGEND

CONSTRUCTION FENCE	—/———/———/———
SILT FENCE	(SF)———(SF)———(SF)
STONE AND BLOCK INLET PROTECTION	▣
CURB AND GRATE INLET PROTECTION	⯃ ⯃
CONCRETE WASHOUT	▤
CONSTRUCTION ENTRANCE	▩
TERRA TUBE	▭

No.	REVISION	DATE

OWNER
I.H.C.C., INC. AND
ROBERG REVOCABLE TRUST
21 BREEZE HILL ROAD
NORTHPORT, NY, 11768
(631) 261 - 5700

APPLICANT:
THE PRESERVE AT INDIAN HILLS
1 RABRO DRIVE, SUITE 100
HAUPPAUGE, N.Y. 11788
(631) 351 - 4000

SEDIMENT AND EROSION CONTROL PLAN 3
FOR
THE PRESERVE AT INDIAN HILLS
SITUATED AT
NORTHPORT
TOWN OF HUNTINGTON, SUFFOLK COUNTY, NEW YORK
S.C.T.M.: DISTRICT: 0400, SECT. 014, BLK. 04, LOTS 1 AND 2
DISTRICT 0400, SECT. 015, BLK. 01, LOTS 3.1, 3.2, 11, 12, 16, 19 AND P/O 22

THOMAS CHARLES DIXON

NELSON + POPE
engineers • architects • surveyors
70 Maxess Road, Melville, NY 11747 • 631.427.5665 • nelsonpope.com

DRAWN BY: GEO	CADD No.: 86047 CSP 2021 ERO&LA.DWG	SCALE:	DRAWING NO.:	C - 128
CHECKED BY: JM	FILE NO.: 400-014	1"=60'		
DATE: OCTOBER, 2021	PROJECT NO.: 86047		SHEET NO.:	29 OF 44

G:\projects\86047\FINALS\CONDOMINIUM\86047 CSP 2021 ERO&LA.dwg, 29 OF 44 SEDIMENT AND EROSION CONTROL PLAN 3, 10/11/2021 2:52:54 PM

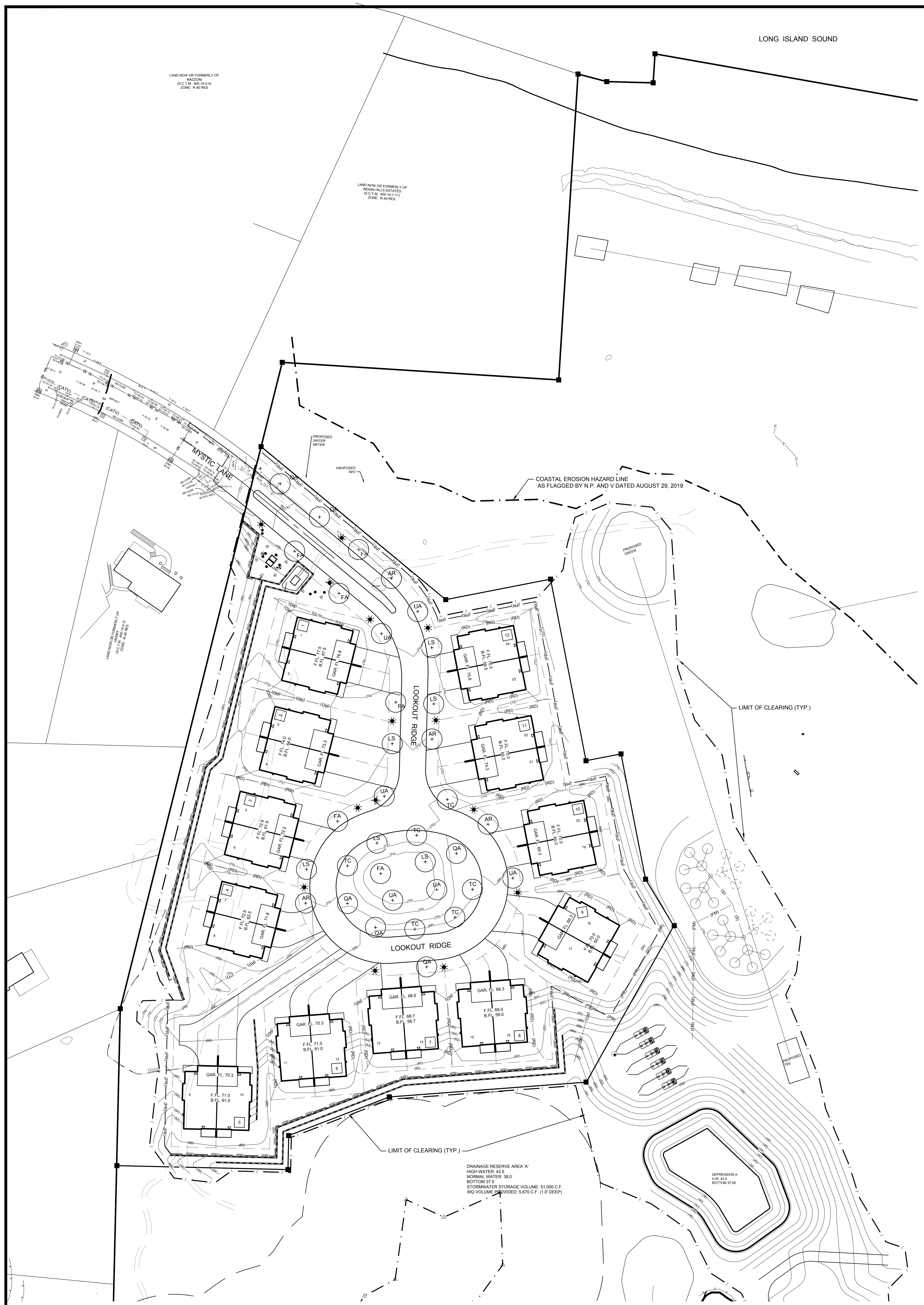
LONG ISLAND SOUND
LAND NOW OR FORMERLY OF
MAZZONI
(S.C.T.M. 400-14-3-4)
ZONE: R-40 RES
LAND NOW OR FORMERLY OF
INDIAN HILLS ESTATES
(S.C.T.M. 400-14-1-11)
ZONE: R-40 RES
LAND NOW OR FORMERLY OF
HENRY
(S.C.T.M. 400-14-3-3)
ZONE: R-40 RES
MYSTIC LANE
PROPOSED WATER METER
PROPOSED RPZ
COASTAL EROSION HAZARD LINE
AS FLAGGED BY N.P. AND V DATED AUGUST 29, 2019
PROPOSED GREEN
LIMIT OF CLEARING (TYP.)
LOOKOUT RIDGE
LOOKOUT RIDGE
LIMIT OF CLEARING (TYP.)
DRAINAGE RESERVE AREA 'A'
HIGH WATER: 43.5
NORMAL WATER: 38.0
BOTTOM 37.0
STORMWATER STORAGE VOLUME: 51,000 C.F.
WQ VOLUME PROVIDED: 5,670 C.F. (1.0' DEEP)
DEPRESSION A
H.W. 43.5
BOTTOM 37.00

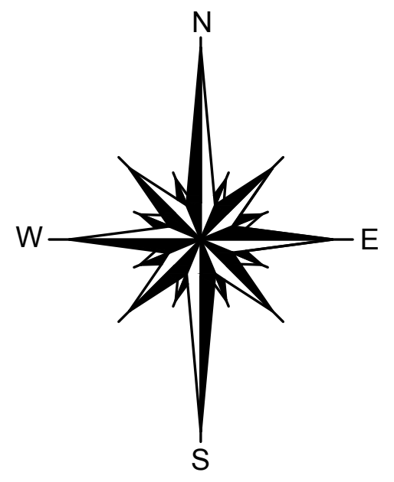

EXISTING

P92.59	PAVEMENT ELEVATION	94	CONTOUR
TC92.59	TOP OF CURB ELEVATION	E	ELECTRIC
BC92.2	BOTTOM OF CURB ELEVATION	W	WATER
X92.0	SPOT ELEVATION	G	GAS
⊠	ELECTRIC BOX	X	FENCE
⊠	PULL BOX	S	SANITARY SEWER
	FIRE HYDRANT	T	TELEPHONE
G	GAS VALVE	OHW	OVERHEAD WIRE
WV	WATER VALVE	D	DRAINAGE
T	TRANSFORMER	CATV	TELEVISION
	ELECTRIC POLE		DRAINAGE MANHOLE
✡	LIGHT POLE	▦	CATCH BASINS
⊠	HIGH TENSION TOWER	✳	TREE TO BE REMOVED
W.M.	WATER MAIN		DECIDUOUS TREE TO REMAIN
W.S.	WATER SERVICE	✳	EVERGREEN TREE TO REMAIN
G.M.	GAS MAIN	☐	MONUMENT

PROPOSED

(TC92.00)	TOP OF CURB ELEVATION	(W)	WATER
(BC91.5)	BOTTOM OF CURB ELEVATION	(FS)	FIRE SERVICE
x(92.0)	SPOT ELEVATION	(WS)	WATER SERVICE
LP	LEACHING POOL	(E)	ELECTRIC
CB	CATCH BASIN	(G)	GAS
SMH	SANITARY MANHOLE	X	FENCE
DMH	DRAINAGE MANHOLE	(HC)	SANITARY HOUSE CONNECTION
(93)	CONTOUR	(D)	DRAINAGE
⊚	LEACHING POOL W/ OPEN GRATE	(RD)	ROOF DRAIN
○	LEACHING POOL W/ SOLID COVER	(T)	TELEPHONE
⊡	DRAINAGE BASIN	(CATV)	TELEVISION
■	CATCH BASIN (TC ~ TOP OF CURB BOX)	▨	CONCRETE WALK
	HYDRANT	/ / /	LIMIT OF CLEARING AND GRADING DURING CONSTRUCTION
⊕ PS	STREET TREE W / SYMBOL	▨	SAWCUT W/ PAVEMENT TO BE REMOVED
(PR)	PICKET RAIL FENCE	⊕	TEST HOLE
		▬ ▬ ▬	DRAINAGE RIDGELINE
		■	PROPOSED MONUMENT

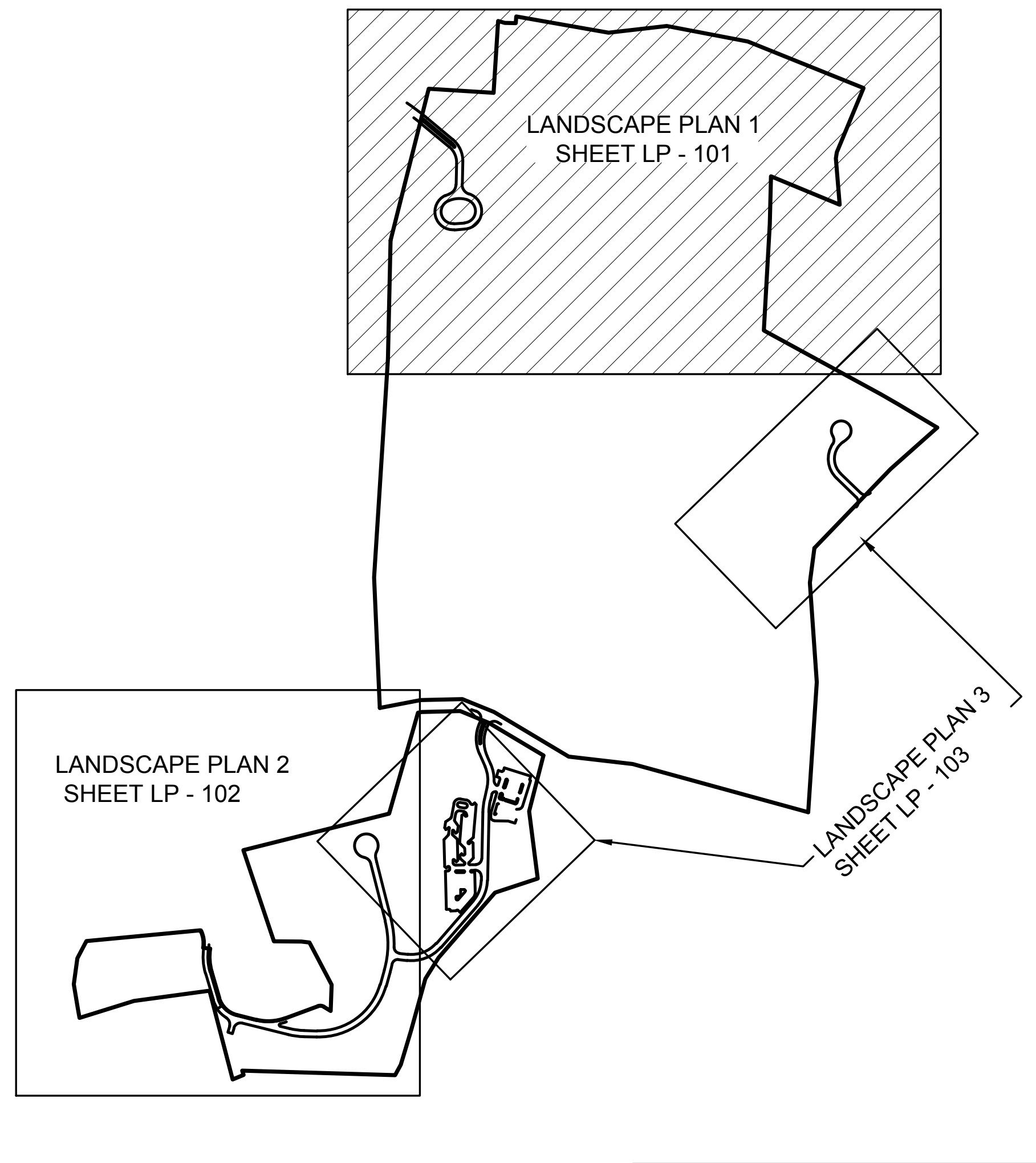
LANDSCAPE PLAN 1
SHEET LP - 101
LANDSCAPE PLAN 2
SHEET LP - 102
LANDSCAPE PLAN 3
SHEET LP - 103

FOR TOWN USE

No.	REVISION	DATE

OWNER
I.H.C.C., INC. AND
ROBERG REVOCABLE TRUST
21 BREEZE HILL ROAD
NORTHPORT, NY, 11768
(631) 261 - 5700

APPLICANT:
THE PRESERVE AT INDIAN HILLS
1 RABRO DRIVE, SUITE 100
HAUPPAUGE, N.Y. 11788
(631) 351 - 4000

LANDSCAPE PLAN 1

FOR

THE PRESERVE AT INDIAN HILLS

SITUATED AT

NORTHPORT

TOWN OF HUNTINGTON, SUFFOLK COUNTY, NEW YORK
S.C.T.M.: DISTRICT: 0400, SECT. 014, BLK. 04, LOTS 1 AND 2
DISTRICT 0400, SECT. 015, BLK. 01, LOTS 3.1, 3.2, 11, 12, 16, 19 AND P/O 22

THOMAS CHARLES DIXON

NELSON + POPE
engineers • architects • surveyors
70 Maxess Road, Melville, NY 11747 • 631.427.5665 • nelsonpope.com

DRAWN BY: GEO	CADD No.: 86047 CSP 2021 ERO&LA.DWG	SCALE: 1"=50'	DRAWING NO.: LP - 101
CHECKED BY: JM	FILE NO.: 400-014		
DATE: OCTOBER, 2021	PROJECT NO.: 86047		SHEET NO.: 30 OF 44

000757-1

R.B. IGNATOW
LANDSCAPE ARCHITECT
91 GREEN STREET
HUNTINGTON, NY 11743

IT IS A VIOLATION OF NEW YORK STATE EDUCATION LAW ARTICLE 145, PROFESSIONAL ENGINEERING AND LAND SURVEYING, SECTION 7209 FOR ANY PERSON, UNLESS HE IS ACTING UNDER THE DIRECTION OF A LICENSED PROFESSIONAL ENGINEER OR LAND SURVEYOR, TO ALTER AN ITEM IN ANY WAY. IF AN ITEM BEARING THE SEAL OF AN ENGINEER OR LAND SURVEYOR IS ALTERED, THE ALTERING ENGINEER OR LAND SURVEYOR SHALL AFFIX TO THE ITEM HIS SEAL AND NOTATION "ALTERED BY" FOLLOWED BY HIS SIGNATURE AND THE DATE OF SUCH ALTERATION, AND SPECIFIC DESCRIPTION OF THE ALTERATION.

EXISTING

P92.59	PAVEMENT ELEVATION
TC92.59	TOP OF CURB ELEVATION
BC92.2	BOTTOM OF CURB ELEVATION
X92.0	SPOT ELEVATION
☒	ELECTRIC BOX
⧄	PULL BOX
	FIRE HYDRANT
G	GAS VALVE
WV	WATER VALVE
T	TRANSFORMER
	ELECTRIC POLE
✡	LIGHT POLE
☒	HIGH TENSION TOWER
W.M.	WATER MAIN
W.S.	WATER SERVICE
G.M.	GAS MAIN

----94----	CONTOUR
—— E ——	ELECTRIC
—— W ——	WATER
—— G ——	GAS
—— X ——	FENCE
—— S ——	SANITARY SEWER
—— T ——	TELEPHONE
—— OHW ——	OVERHEAD WIRE
—— D ——	DRAINAGE
—— CATV ——	TELEVISION
◎	DRAINAGE MANHOLE
▦	CATCH BASINS
✷	TREE TO BE REMOVED
	DECIDUOUS TREE TO REMAIN
✷	EVERGREEN TREE TO REMAIN
□	MONUMENT

PROPOSED

(TC92.00)	TOP OF CURB ELEVATION
(BC91.5)	BOTTOM OF CURB ELEVATION
x(92.0)	SPOT ELEVATION
LP	LEACHING POOL
CB	CATCH BASIN
SMH	SANITARY MANHOLE
DMH	DRAINAGE MANHOLE
——(93)——	CONTOUR
⊜	LEACHING POOL W/ OPEN GRATE
○	LEACHING POOL W/ SOLID COVER
▣	DRAINAGE BASIN
■	CATCH BASIN (TC ~ TOP OF CURB BOX)
	HYDRANT
⊕ PS	STREET TREE W / SYMBOL
—— (PR) ——	PICKET RAIL FENCE

—— (W) ——	WATER
—— (FS) ——	FIRE SERVICE
—— (WS) ——	WATER SERVICE
—— (E) ——	ELECTRIC
—— (G) ——	GAS
—— X ——	FENCE
—— (HC) ——	SANITARY HOUSE CONNECTION
—— (D) ——	DRAINAGE
—— (RD) ——	ROOF DRAIN
—— (T) ——	TELEPHONE
—— (CATV) ——	TELEVISION
▨	CONCRETE WALK
/ —— / —— /	LIMIT OF CLEARING AND GRADING DURING CONSTRUCTION
▨	SAWCUT W/ PAVEMENT TO BE REMOVED
◐	TEST HOLE
— — —	DRAINAGE RIDGELINE
■	PROPOSED MONUMENT

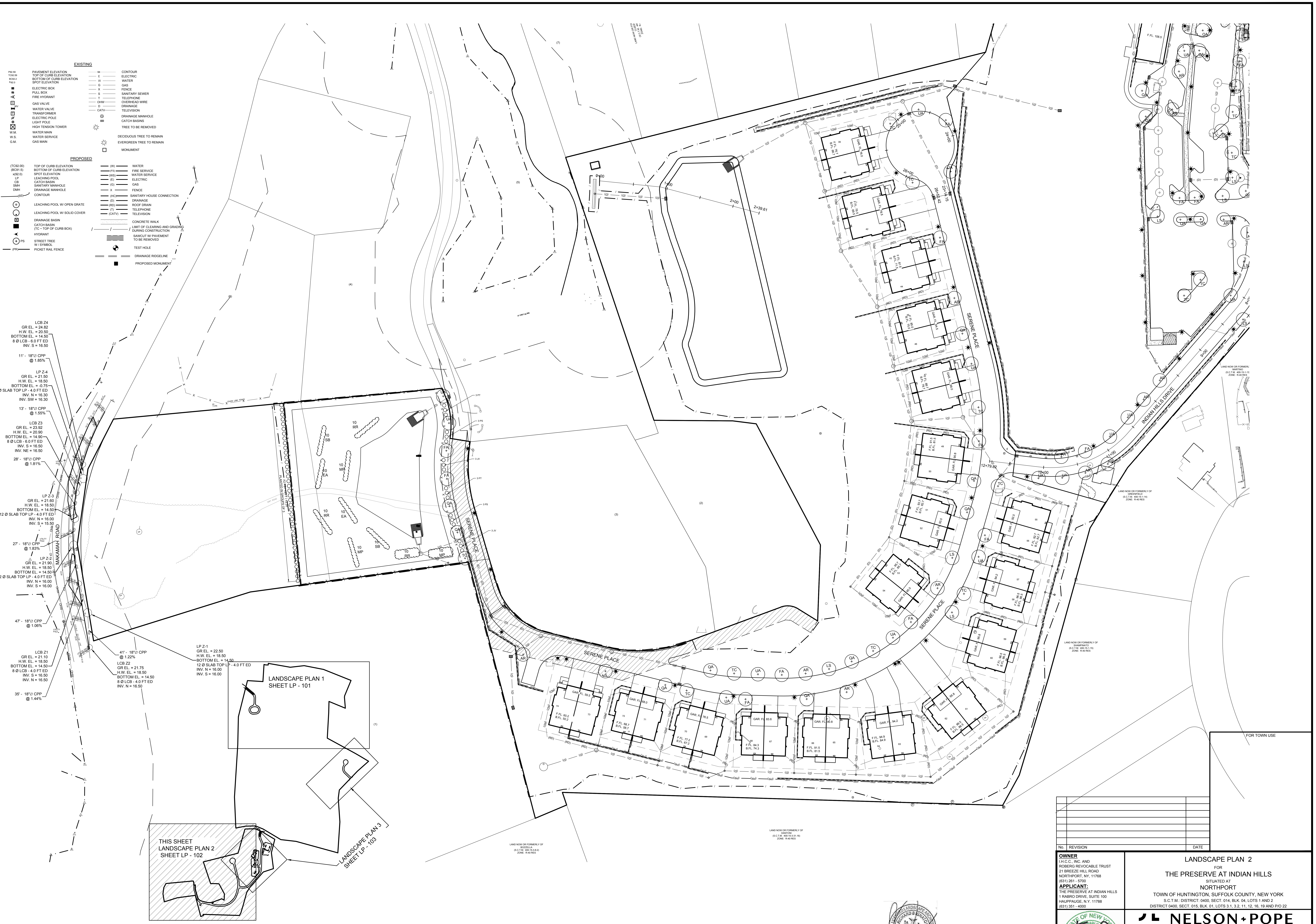
LCB Z4
GR EL. = 24.82
H.W. EL. = 20.50
BOTTOM EL. = 14.50
8 Ø LCB - 6.0 FT ED
INV. S = 16.50
11' - 18"∅ CPP
@ 1.85%
LP Z-4
GR EL. = 21.50
H.W. EL. = 18.50
BOTTOM EL. = -0.75
12 Ø SLAB TOP LP - 4.0 FT ED
INV. N = 16.30
INV. SW = 16.30
13' - 18"∅ CPP
@ 1.55%
LCB Z3
GR EL. = 23.92
H.W. EL. = 20.90
BOTTOM EL. = 14.90
8 Ø LCB - 6.0 FT ED
INV. S = 16.50
INV. NE = 16.50
28' - 18"∅ CPP
@ 1.81%
LP Z-3
GR EL. = 21.60
H.W. EL. = 18.50
BOTTOM EL. = 14.50
12 Ø SLAB TOP LP - 4.0 FT ED
INV. N = 16.00
INV. S = 15.50
27' - 18"∅ CPP
@ 1.83%
LP Z-2
GR EL. = 21.90
H.W. EL. = 18.50
BOTTOM EL. = 14.50
12 Ø SLAB TOP LP - 4.0 FT ED
INV. N = 16.00
INV. S = 16.00
MAKAMAH ROAD
UTILITY POLE
47' - 18"∅ CPP
@ 1.06%
LCB Z1
GR EL. = 21.10
H.W. EL. = 18.50
BOTTOM EL. = 14.50
8 Ø LCB - 4.0 FT ED
INV. S = 16.50
INV. N = 16.50
35' - 18"∅ CPP
@ 1.44%
41' - 18"∅ CPP
@ 1.22%
LCB Z2
GR EL. = 21.75
H.W. EL. = 18.50
BOTTOM EL. = 14.50
8 Ø LCB - 4.0 FT ED
INV. N = 16.50
LP Z-1
GR EL. = 22.50
H.W. EL. = 18.50
BOTTOM EL. = 14.50
12 Ø SLAB TOP LP - 4.0 FT ED
INV. N = 16.00
INV. S = 16.00
SERENE PLACE
INDIAN HILLS DRIVE
10 RR
10 SB
10 EA
10 MP
LANDSCAPE PLAN 1
SHEET LP - 101
LANDSCAPE PLAN 3
SHEET LP - 103
THIS SHEET
LANDSCAPE PLAN 2
SHEET LP - 102
LAND NOW OR FORMERLY OF
BOZZELLA
(S.C.T.M. 400-15-3-8.2)
ZONE: R-40 RES
LAND NOW OR FORMERLY OF
DANTONI
(S.C.T.M. 400-15-3-31.16)
ZONE: R-40 RES
LAND NOW OR FORMERLY OF
SHAMPINATO
(S.C.T.M. 400-15-1-15)
ZONE: R-40 RES
LAND NOW OR FORMERLY OF
GREENFIELD
(S.C.T.M. 400-15-1-14)
ZONE: R-40 RES
LAND NOW OR FORMERLY OF
MARTINO
(S.C.T.M. 400-15-1-13)
ZONE: R-40 RES
FOR TOWN USE

IT IS A VIOLATION OF NEW YORK STATE EDUCATION LAW ARTICLE 145, PROFESSIONAL ENGINEERING AND LAND SURVEYING, SECTION 7209 FOR ANY PERSON, UNLESS HE IS ACTING UNDER THE DIRECTION OF A LICENSED PROFESSIONAL ENGINEER OR LAND SURVEYOR, TO ALTER AN ITEM IN ANY WAY. IF AN ITEM BEARING THE SEAL OF AN ENGINEER OR LAND SURVEYOR IS ALTERED, THE ALTERING ENGINEER OR LAND SURVEYOR SHALL AFFIX TO THE ITEM HIS SEAL AND NOTATION "ALTERED BY" FOLLOWED BY HIS SIGNATURE AND THE DATE OF SUCH ALTERATION, AND SPECIFIC DESCRIPTION OF THE ALTERATION.

RICHARD B IGNATOW
000757-1

R.B. IGNATOW
LANDSCAPE ARCHITECT
91 GREEN STREET
HUNTINGTON, NY 11743

No.	REVISION	DATE

OWNER
I.H.C.C., INC. AND
ROBERG REVOCABLE TRUST
21 BREEZE HILL ROAD
NORTHPORT, NY, 11768
(631) 261 - 5700

APPLICANT:
THE PRESERVE AT INDIAN HILLS
1 RABRO DRIVE, SUITE 100
HAUPPAUGE, N.Y. 11788
(631) 351 - 4000

LANDSCAPE PLAN 2
FOR
THE PRESERVE AT INDIAN HILLS
SITUATED AT
NORTHPORT
TOWN OF HUNTINGTON, SUFFOLK COUNTY, NEW YORK
S.C.T.M.: DISTRICT: 0400, SECT. 014, BLK. 04, LOTS 1 AND 2
DISTRICT 0400, SECT. 015, BLK. 01, LOTS 3.1, 3.2, 11, 12, 16, 19 AND P/O 22

THOMAS CHARLES DIXON
080915

NELSON + POPE
engineers • architects • surveyors
70 Maxess Road, Melville, NY 11747 • 631.427.5665 • nelsonpope.com

DRAWN BY: GEO	CADD No.: 86047 CSP 2021 ERO&LA.DWG	SCALE:	DRAWING NO.:
CHECKED BY: JM	FILE NO.: 400-014	1"=50'	LP - 102
DATE: OCTOBER, 2021	PROJECT NO.: 86047		SHEET NO.: 31 OF 44

G:\projects\86047\FINALS\CONDOMINIUM\86047 CSP 2021 ERO&LA.dwg, 31 OF 44 LANDSCAPE PLAN 2, 10/11/2021 2:54:53 PM

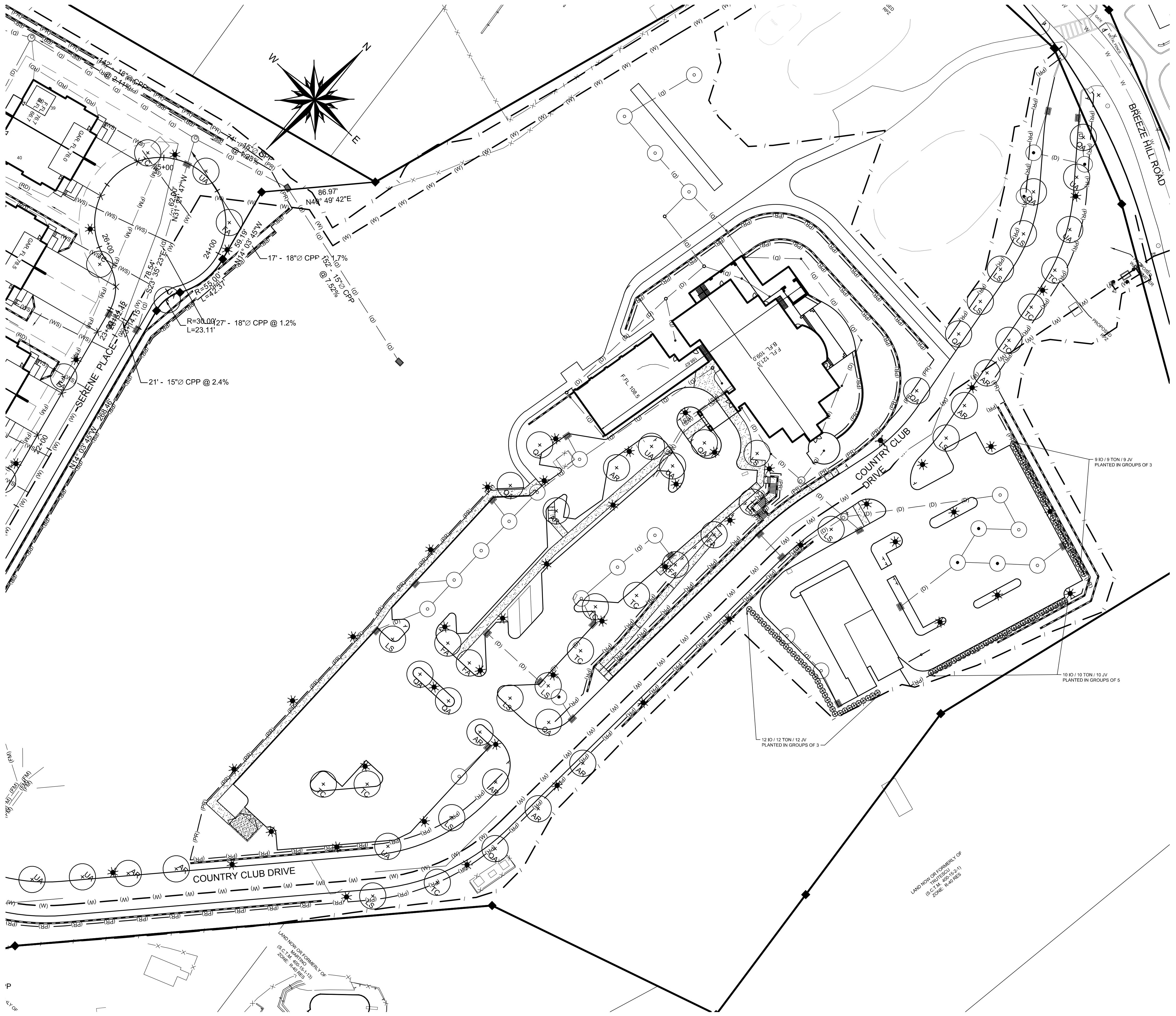
BREEZE HILL ROAD
SERENE PLACE
COUNTRY CLUB DRIVE
COUNTRY CLUB DRIVE
17' - 18"Ø CPP @ 1.2%
21' - 15"Ø CPP @ 2.4%
9 IO / 9 TON / 9 JV
PLANTED IN GROUPS OF 3
10 IO / 10 TON / 10 JV
PLANTED IN GROUPS OF 5
12 IO / 12 TON / 12 JV
PLANTED IN GROUPS OF 3
QA
AR
LS
TC

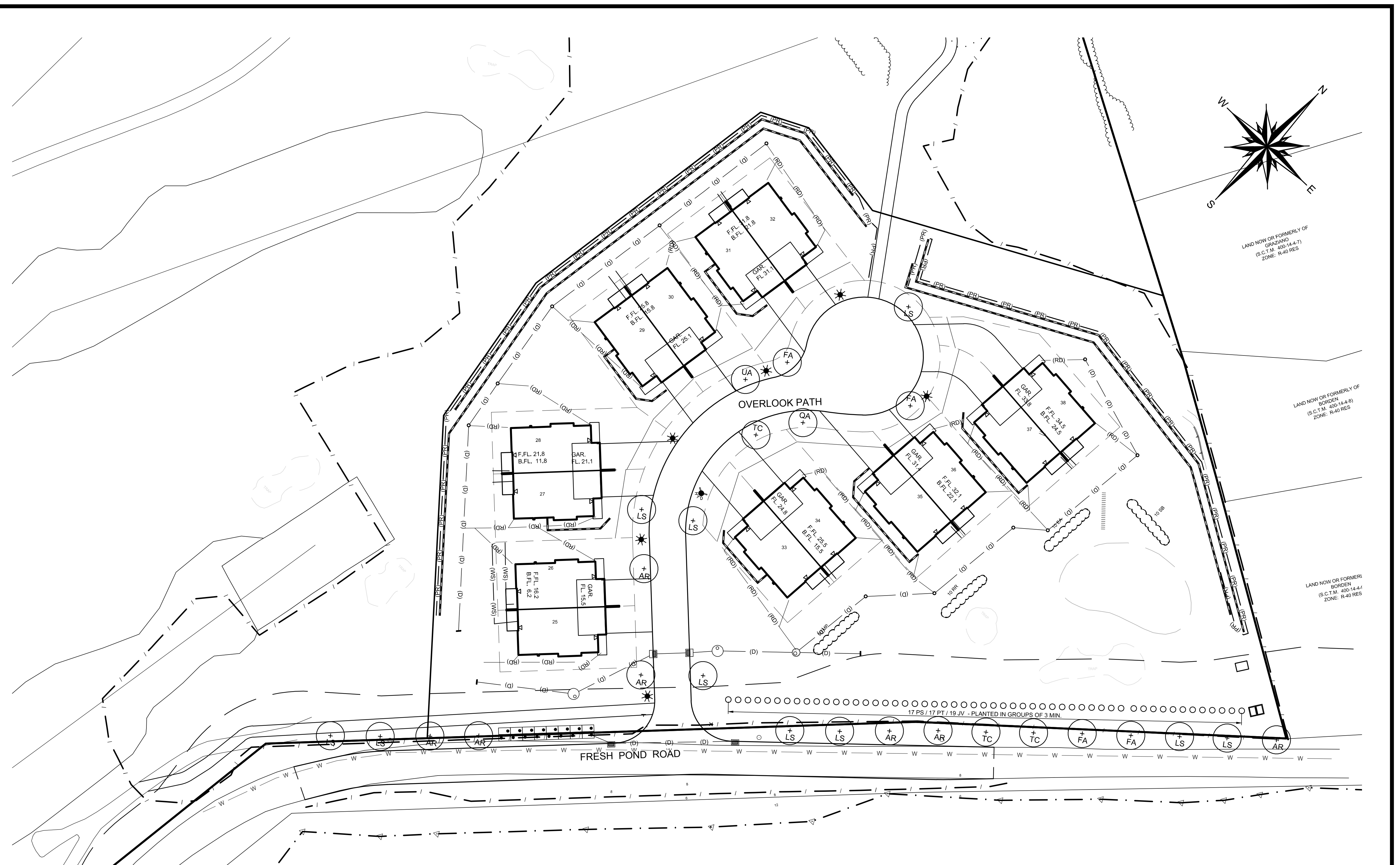
OVERLOOK PATH
FRESH POND ROAD
17 PS / 17 PT / 19 JV - PLANTED IN GROUPS OF 3 MIN.
10 RR
MP
LS
AR
TC
FA
QA
UA
GAR.
FL. 15.5
TRAP

EVERGREEN SCREEN PLANTING SCHEDULE

QTY	SYM	BOTANICAL NAME	COMMON NAME	SIZE	SPACING
31	JV	JUNIPERUS VIRGINIANA	EASTERN RED CEDAR	6' TO 8' HT.	4' o.c.
31	IO	ILEX OPACA	AMERICAN HOLLY	6' TO 8' HT.	4' o.c.
31	TON	THUJA OCCIDENTALIS NIGRA	DARK AMERICAN ARBORVITAE	6' TO 8' HT.	4' o.c.

STREET TREE PLANTING SCHEDULE

QTY	SYM	BOTANICAL NAME	COMMON NAME	SIZE	SPACING
27	QA	QUERCUS ALBA	WHITE OAK	3-31/2" CAL.	35' o.c.
28	AR	ACER RUBRUM	RED MAPLE	3-31/2" CAL.	25' o.c.
32	LS	LIQUIDAMBAR STYRACIFLUA	SWEETGUM	3-31/2" CAL.	35' o.c.
26	TC	TILIA CORDATA	LITTLELEAF LINDEN	3-31/2" CAL.	35' o.c.
25	UA	ULMUS AMERICANA LIBERTY	LIBERTY ELM	3-31/2" CAL.	35' o.c.
23	FA	FRAXINUS AMERICANA	WHITE ASH	3-31/2" CAL.	35' o.c.

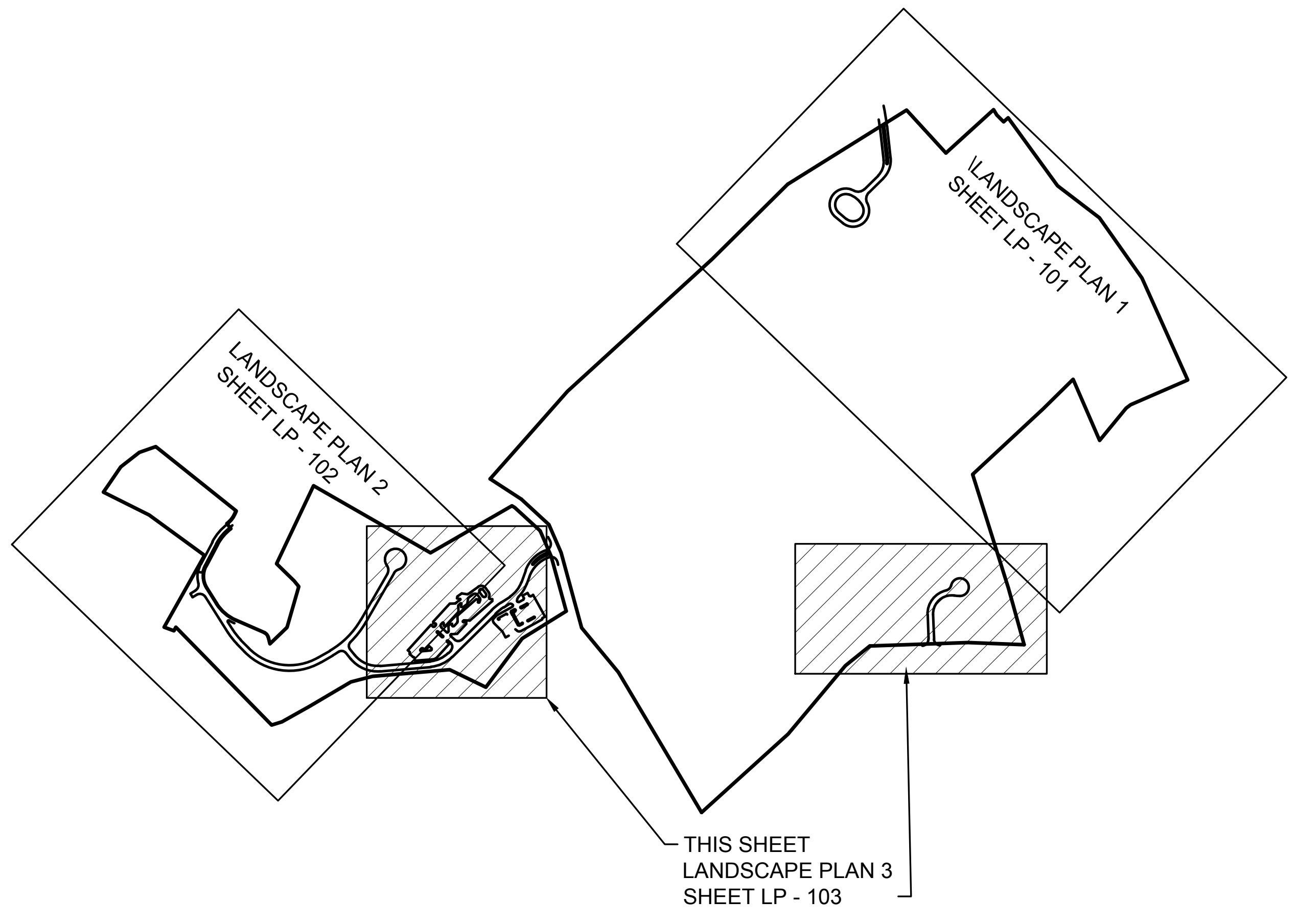
LANDSCAPE PLAN 1
SHEET LP - 101
LANDSCAPE PLAN 2
SHEET LP - 102
THIS SHEET
LANDSCAPE PLAN 3
SHEET LP - 103

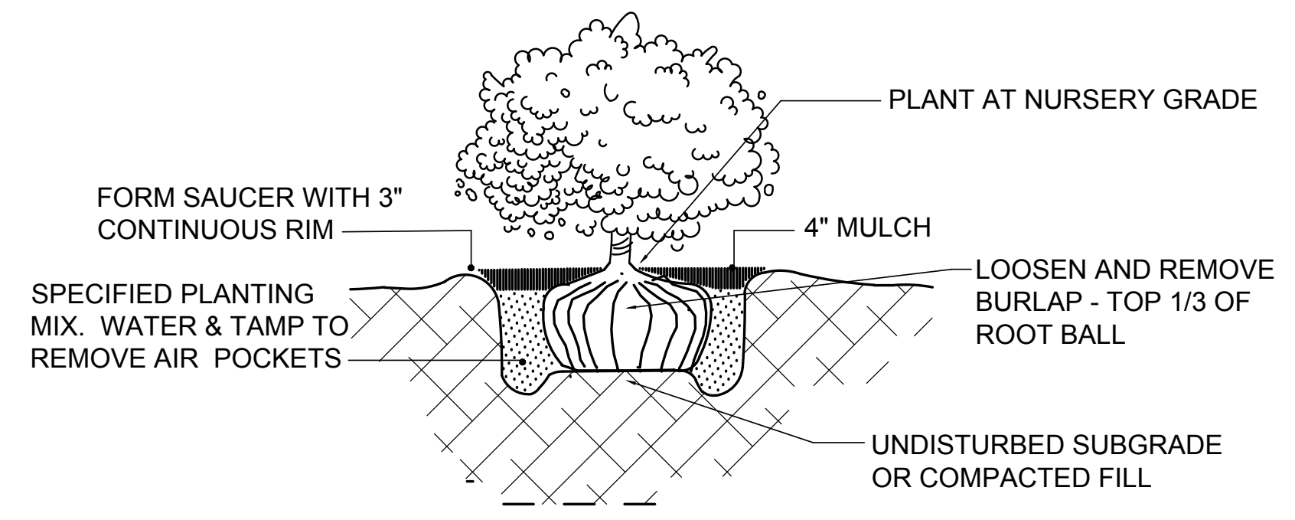
PLANT AT NURSERY GRADE
FORM SAUCER WITH 3" CONTINUOUS RIM
4" MULCH
SPECIFIED PLANTING MIX. WATER & TAMP TO REMOVE AIR POCKETS
LOOSEN AND REMOVE BURLAP - TOP 1/3 OF ROOT BALL
UNDISTURBED SUBGRADE OR COMPACTED FILL

SHRUB PLANTING
N.T.S.

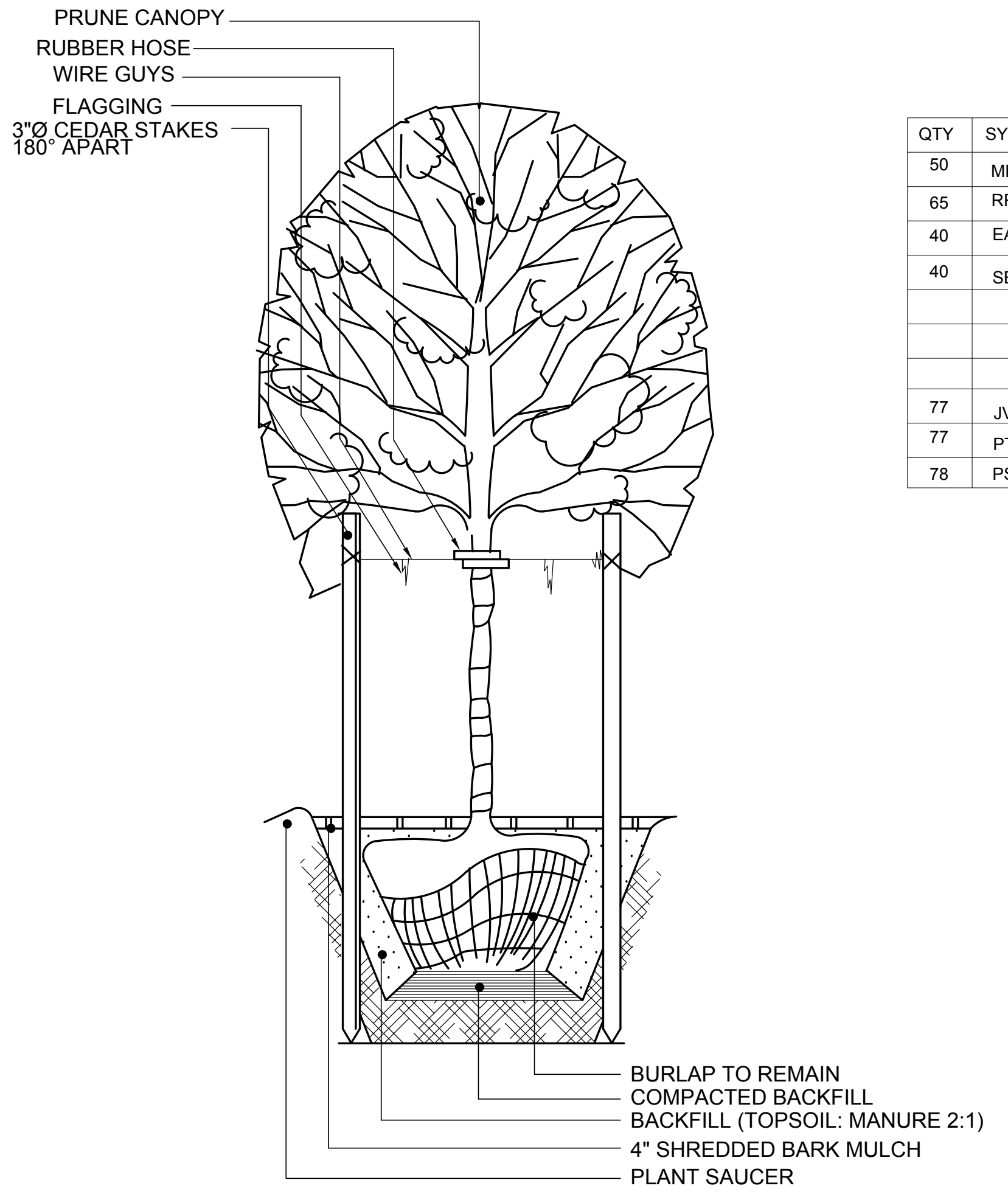
PRUNE CANOPY
RUBBER HOSE
WIRE GUYS
FLAGGING
3"Ø CEDAR STAKES 180° APART
BURLAP TO REMAIN
COMPACTED BACKFILL
BACKFILL (TOPSOIL: MANURE 2:1)
4" SHREDDED BARK MULCH
PLANT SAUCER

TREE PLANTING DETAIL
N.T.S.

TREE AND SHRUB PLANTING

1. ALL TREES AND SHRUBS SHALL BE PLANTED IN CIRCULAR PITS 1 FOOT CLEAR ON ALL SIDES AND BOTTOM OF ROOT BALL AND BACKFILL WITH A MIXTURE OF 7 PARTS TOPSOIL, 1 PART ROTTED MANURE.
2. ALL PLANT MATERIAL SHALL HAVE VIGOROUS ROOT GROWTH AND BE FREE FROM ROOT INJURY AND DISEASE IN ANY FORM.
3. ALL PLANT MATERIALS SHALL BE NURSERY GROWN WITH SIZE GRADUATION, ROOTBALL AND DIAMETER AND SPREAD CONFORMING WITH THE STANDARDS OF THE AMERICAN STANDARD OF NURSEY MEN.
4. STREET TREES SHALL NOT BE PLANTED WITHIN 10' OF A FIRE HYDRANT, DRIVEWAY APRON OR STORMWATER PIPE/CATCH BASIN OR WITHIN 25' OF ANY STREET LIGHT, STREET SIGN OR POINT OF CURVATURE OR TANGENCY OF ANY CORNER.
5. THERE SHALL BE NO PLANT SUBSTITUTIONS UNLESS AUTHORIZED BY THE STAFF OF THE BROOKHAVEN TOWN PLANNING DEPARTMENT.
6. ALL PLANT MATERIAL GUARANTEED FOR A PERIOD OF ONE YEAR FOLLOWING CERTIFICATE OF OCCUPANCY.
7. ALL PLANTING BEDS TO BE MULCHED WITH 2" OF SHEDDED BARK.
8. ALL PLANTING BEDS TO RECEIVE 4' OF SCREENED TOPSOIL PRIOR TO PLANT INSTALLATION.
9. NO PLANT MATERIAL, EXCEPT LAWN OR GROUNDCOVER, IS TO BE LOCATED WITHIN 2' OF ANY PARKING LOT CURBS.

RECHARGE BASIN PLANTING SCHEDULE

QTY	SYM	BOTANICAL NAME	COMMON NAME	SIZE	SPACING
50	MP	MYRICA PENSYLVANICA	N. BAYBERRY	2' TO 3' HT	4' OC
65	RR	ROSA RUGOSA	RUGOSE ROSE	2' TO 3' HT	4' OC
40	EA	ELEAGNUS AUGUSTIFOLIA	RUSSIAN OLIVE	2' TO 3' HT	4' OC
40	SB	SPIRAEA BILLIARDI	BILLIARD SPIRAEA	2' TO 3' HT	4' OC
77	JV	JUNIPERUS VIRGINIANA	EASTERN RED CEDAR	6' TO 8' HT.	7'OC
77	PT	PSEUDOTSUGA TAXIFOLIA	DOUGLAS FIR	6' TO 8' B&B	7' OC
78	PS	PINUS STOBUS	EASTERN WHITE PINE	6' TO 8' HT.	7'OC

EXISTING

P92.59	PAVEMENT ELEVATION	------94------	CONTOUR
TC92.59	TOP OF CURB ELEVATION	—— E ——	ELECTRIC
BC92.2	BOTTOM OF CURB ELEVATION	—— W ——	WATER
X92.0	SPOT ELEVATION	—— G ——	GAS
☒	ELECTRIC BOX	—— X ——	FENCE
⧄	PULL BOX	—— S ——	SANITARY SEWER
	FIRE HYDRANT	—— T ——	TELEPHONE
G	GAS VALVE	—— OHW ——	OVERHEAD WIRE
WV	WATER VALVE	—— D ——	DRAINAGE
T	TRANSFORMER	—— CATV ——	TELEVISION
	ELECTRIC POLE		DRAINAGE MANHOLE
✡	LIGHT POLE		CATCH BASINS
☒	HIGH TENSION TOWER	✵	TREE TO BE REMOVED
W.M.	WATER MAIN		DECIDUOUS TREE TO REMAIN
W.S.	WATER SERVICE	✵	EVERGREEN TREE TO REMAIN
G.M.	GAS MAIN	☐	MONUMENT

PROPOSED

(TC92.00)	TOP OF CURB ELEVATION	—— (W) ——	WATER
(BC91.5)	BOTTOM OF CURB ELEVATION	—— (FS) ——	FIRE SERVICE
x(92.0)	SPOT ELEVATION	—— (WS) ——	WATER SERVICE
LP	LEACHING POOL	—— (E) ——	ELECTRIC
CB	CATCH BASIN	—— (G) ——	GAS
SMH	SANITARY MANHOLE	—— X ——	FENCE
DMH	DRAINAGE MANHOLE	—— (HC) ——	SANITARY HOUSE CONNECTION
——(93)——	CONTOUR	—— (D) ——	DRAINAGE
⊜	LEACHING POOL W/ OPEN GRATE	—— (RD) ——	ROOF DRAIN
○	LEACHING POOL W/ SOLID COVER	—— (T) ——	TELEPHONE
▣	DRAINAGE BASIN	—— (CATV) ——	TELEVISION
■	CATCH BASIN (TC ~ TOP OF CURB BOX)		CONCRETE WALK
	HYDRANT	/ —— / —— /	LIMIT OF CLEARING AND GRADING DURING CONSTRUCTION
⊕ PS	STREET TREE W / SYMBOL		SAWCUT W/ PAVEMENT TO BE REMOVED
—— (PR) ——	PICKET RAIL FENCE		TEST HOLE
		▬ ▬ ▬	DRAINAGE RIDGELINE
		■	PROPOSED MONUMENT

NOTES:

1) ALL PLANT MATERIAL GUARANTEED FOR A PERIOD OF ONE YEAR FOLLOWING ACCEPTANCE BY OWNER.

2) ALL PLANTING BEDS SHALL BE WEEDED AND HAVE A MINIMUM FOUR (4) INCH THICK LAYER OF WOOD CHIPS (OR SHREDDED BARK).

3) ALL PLANTING AREAS TO RECEIVE 4" OF SCREENED TOPSOIL PRIOR TO PLANT INSTALLATION.

4) LANDSCAPING SHALL BE PLANTED AND MAINTAINED IN COMPLIANCE WITH TOWN OF HUNTINGTON SUBDIVISION REGULATIONS AND SITE IMPROVEMENT SPECIFICATIONS AND ADDENDA.

5) THERE SHALL BE NO PLANT SUBSTITUTIONS UNLESS AUTHORIZED BY THE STAFF OF THE HUNTINGTON TOWN PLANNING AND ENVIRONMENTAL DEPARTMENT.

6) NO PLANT MATERIAL, EXCEPT LAWN OR GROUNDCOVER, IS TO BE LOCATED WITHIN 2' OF ANY PARKING LOT CURBS.

7) ALL DECIDUOUS TREES TO BE SECURED WITH TWO 3" DIA. CEDAR STAKES 180 DEGREES APART.

8) ALL ROPES AND WIRES SURROUNDING ROOT BALL TO BE REMOVED PRIOR TO BACKFILLING OF TREE PITS. TREE TRUNK WRAP TO BE REMOVED.

9) NO TREES TO BE LOCATED WITHIN 10' OF DRYWELLS, WALLS, OR PIPING AND DRAINAGE STRUCTURES AS PER TOWN OF HUNTINGTON STANDARDS.

10) ALL PROPOSED STREET TREES TO BE LIMBED UP TO A HEIGHT OF 7' TO AVOID ANY INTERFERENCE WITH PEDESTRIAN MOVEMENT ALONG PROPOSED SIDEWALKS.

11) FIELD PLANTING OF STREET TREES AND OTHER PLANT MATERIALS MUST BE UNDER THE SUPERVISION OF A LICENSED NEW YORK STATE REGISTERED LANDSCAPE ARCHITECT OR A QUALIFIED HORTICULTURIST DEEMED QUALIFIED BY THE REVIEWING AGENCY TO OVERSEE LANDSCAPE INSTALLATION IN ACCORDANCE WITH THE TOWN REQUIREMENTS. THE DEVELOPER MUST SUPPLY THE TOWN ENGINEER WITH AN AFFIDAVIT FROM THE REGISTERED LANDSCAPE ARCHITECT OR THE QUALIFIED HORTICULTURIST STATING THAT THE QUALITY, VARIETY, SIZE OF PLANTS AND PLANTING PROCEDURES CONFORM TO THE SPECIFICATIONS OF THE TOWN OF HUNTINGTON.

12) EXISTING VEGETATION SHALL BE RETAINED UNLESS SPECIFIED ELSEWHERE ON THIS PLAN.

* IRRIGATION REQUIRED FOR LANDSCAPE AND LAWN AREAS.

HYDROSEED MIX "B" - 170 LBS/ACRE
ECOLOGY SUMMER MIXTURE
60% RELIANT HARD FESCUE
20% JAMESTOWN II CHEWING FESCUE
20% TRIBUTE TALL FESCUE

007571

R.B. IGNATOW
LANDSCAPE ARCHITECT
91 GREEN STREET
HUNTINGTON, NY 11743

IT IS A VIOLATION OF NEW YORK STATE EDUCATION LAW ARTICLE 145, PROFESSIONAL ENGINEERING AND LAND SURVEYING, SECTION 7209 FOR ANY PERSON, UNLESS HE IS ACTING UNDER THE DIRECTION OF A LICENSED PROFESSIONAL ENGINEER OR LAND SURVEYOR, TO ALTER AN ITEM IN ANY WAY. IF AN ITEM BEARING THE SEAL OF AN ENGINEER OR LAND SURVEYOR IS ALTERED, THE ALTERING ENGINEER OR LAND SURVEYOR SHALL AFFIX TO THE ITEM HIS SEAL AND NOTATION "ALTERED BY" FOLLOWED BY HIS SIGNATURE AND THE DATE OF SUCH ALTERATION, AND SPECIFIC DESCRIPTION OF THE ALTERATION.

FOR TOWN USE

No.	REVISION	DATE

OWNER
I.H.C.C., INC. AND
ROBERG REVOCABLE TRUST
21 BREEZE HILL ROAD
NORTHPORT, NY, 11768
(631) 261 - 5700

APPLICANT:
THE PRESERVE AT INDIAN HILLS
1 RABRO DRIVE, SUITE 100
HAUPPAUGE, N.Y. 11788
(631) 351 - 4000

LANDSCAPE PLAN 3
FOR
THE PRESERVE AT INDIAN HILLS
SITUATED AT
NORTHPORT
TOWN OF HUNTINGTON, SUFFOLK COUNTY, NEW YORK
S.C.T.M.: DISTRICT: 0400, SECT. 014, BLK. 04, LOTS 1 AND 2
DISTRICT 0400, SECT. 015, BLK. 01, LOTS 3.1, 3.2, 11, 12, 16, 19 AND P/O 22

THOMAS CHARLES DIXON

NELSON + POPE
engineers • architects • surveyors
70 Maxess Road, Melville, NY 11747 • 631.427.5665 • nelsonpope.com

DRAWN BY: GEO	CADD No.: 86047 CSP 2021 ERO&LA.DWG	SCALE: 1"=50'	DRAWING NO.: LP - 103
CHECKED BY: JM	FILE NO.: 400-014		
DATE: OCTOBER, 2021	PROJECT NO.: 86047		SHEET NO.: 32 OF 44

IT IS A VIOLATION OF NEW YORK STATE EDUCATION LAW ARTICLE 145, PROFESSIONAL ENGINEERING AND LAND SURVEYING, SECTION 7209 FOR ANY PERSON, UNLESS HE IS ACTING UNDER THE DIRECTION OF A LICENSED PROFESSIONAL ENGINEER OR LAND SURVEYOR, TO ALTER AN ITEM IN ANY WAY. IF AN ITEM BEARING THE SEAL OF AN ENGINEER OR LAND SURVEYOR IS ALTERED, THE ALTERING ENGINEER OR LAND SURVEYOR SHALL AFFIX TO THE ITEM HIS SEAL AND NOTATION "ALTERED BY" FOLLOWED BY HIS SIGNATURE AND THE DATE OF SUCH ALTERATION, AND SPECIFIC DESCRIPTION OF THE ALTERATION.

MYSTIC LANE
COASTAL EROSION HAZARD LINE
FLAGGED BY N.P.AND V DATED 8-29-2018
LOOKOUT RIDGE
MYSTIC RIDGE
DEPRESSION A
H.W. 43.5
BOTTOM 37.00
COASTAL EROSION HAZARD LINE
FLAGGED BY N.P.AND V DATED 8-29-2018
ROCKS
TRAIL

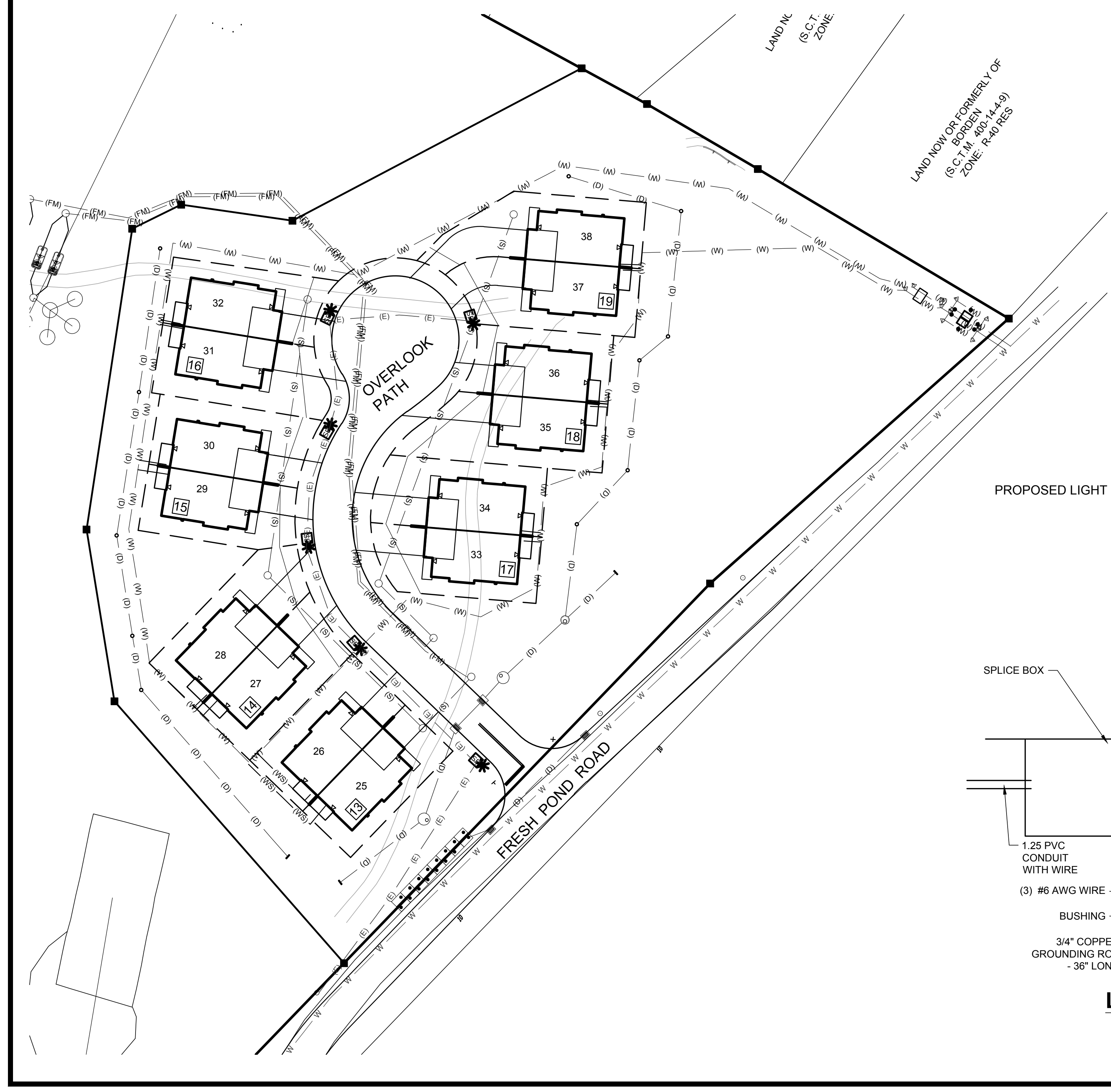

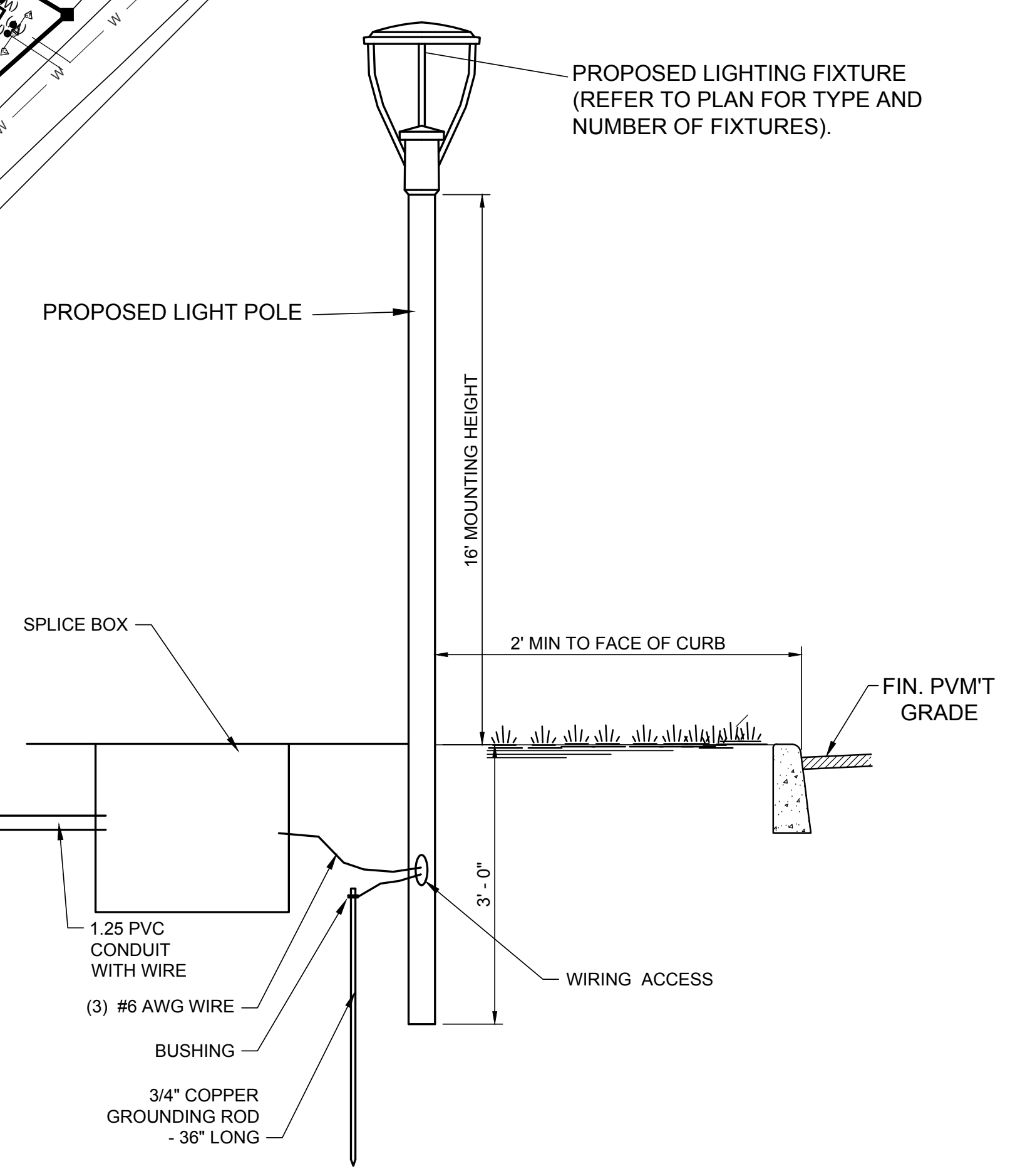
PROPOSED LIGHTING FIXTURE (REFER TO PLAN FOR TYPE AND NUMBER OF FIXTURES).
PROPOSED LIGHT POLE
16' MOUNTING HEIGHT
2' MIN TO FACE OF CURB
FIN. PVM'T GRADE
SPLICE BOX
3' - 0"
1.25 PVC CONDUIT WITH WIRE
(3) #6 AWG WIRE
BUSHING
3/4" COPPER GROUNDING ROD - 36" LONG
WIRING ACCESS

LIGHT DETAIL

NOT TO SCALE

TOWN OF HUNTINGTON
REGULATIONS FOR INSTALLATION OF STREETLIGHTING
IN RESIDENTIAL SUBDIVISIONS

1. GENERAL: STREETLIGHT POLES, LUMINARIES, AND ALL NECESSARY UNDERGROUND ELECTRIC WIRING, CONDUIT AND SPLICE BOXES SHALL BE INSTALLED IN ALL NEW SUBDIVISIONS.

2. PLANS: PRIOR TO COMMENCEMENT OF THE INSTALLATION, PLANS OF THE PROPOSED STREETLIGHT LAYOUT SHALL BE SUBMITTED TO THE TOWN STREETLIGHTING DEPARTMENT FOR APPROVAL. PLANS SHALL BE DRAWN TO SCALE AND INCLUDE THE PROPOSED LOCATION OF DRIVEWAYS, PSEG TRANSFORMERS AND SERVICE BOXES, AND THE PROPOSED STREETLIGHTING FACILITIES.

3. LOCATION OF STREETLIGHTS: THE PLANS SUBMITTED FOR APPROVAL SHALL INDICATE THE LOCATION AND SPACING OF THE PROPOSED STREETLIGHTS, ELECTRIC SERVICE POINTS FOR THE LIGHTS, AND PROPOSED CONDUIT RUNS. IN GENERAL, STREETLIGHTS SHALL BE INSTALLED AT EACH STREET INTERSECTION, AT THE END OF EACH CUL-DE-SAC, AND SHALL BE SPACED 95 TO 125 FEET APART. INSTALLATION OF ADDITIONAL LIGHTING MAY BE REQUIRED AT CURVES IN THE ROADWAY, WITHIN LARGE CUL-DE-SACS, AND IN OTHER SPECIAL INSTANCES. THE STREETLIGHTS SHALL BE LOCATED ON THE SAME SIDE OF THE STREET AS THE PSEG ELECTRIC TRANSFORMERS AND THE STREETLIGHT WIRING SHALL NOT PASS BENEATH ROADWAYS. WHETHER POSSIBLE STREETLIGHTS SHALL BE LOCATED ON THE PROPERTY LINE BETWEEN TWO HOUSES. STREETLIGHTING CIRCUITS SHALL BE LIMITED TO A MAXIMUM OF SIX (6) LIGHTS PER CIRCUIT.

4. GENERAL INSTALLATION REQUIREMENTS: ALL INSTALLATION WORK AND EQUIPMENT, WIRING AND ASSOCIATED EQUIPMENT, SPLICING AND WORKMANSHIP SHALL CONFORM TO THE NATIONAL ELECTRICAL CODE, STANDARD INDUSTRY PRACTICE, AND THE REQUIREMENTS OF PSEG AND THE TOWN WIDE STREETLIGHTING DISTRICT. INSTALLATION OF ALL STREETLIGHTING EQUIPMENT SHALL BE PERFORMED BY AN ELECTRICAL CONTRACTOR LICENSED BY SUFFOLK COUNTY, NY.

5. INSPECTIONS: UPON COMMENCEMENT OF THE INSTALLATION WORK, THE TOWN STREETLIGHTING INSPECTORS WILL PERFORM REGULAR INSPECTIONS OF THE WORK. THE BUILDER SHALL BE RESPONSIBLE FOR NOTIFICATION OF THE TOWN STREETLIGHTING DEPARTMENT 48 HOURS PRIOR TO THE START OF ANY WORK TO ALLOW FOR SCHEDULING OF THE REQUIRED INSPECTIONS. IN NO CASE SHALL ANY EXCAVATIONS BE BACK FILLED UNTIL THE INSTALLATION HAS BEEN INSPECTED AND APPROVED THE TOWN LIGHTING INSPECTOR. UPON COMPLETION AND FINAL TESTING OF THE INSTALLATION BY THE CONTRACTOR, THE TOWN STREETLIGHTING INSPECTOR WILL PERFORM A FINAL INSPECTION OF THE WORK. ALL FINAL GRADING OF THE CONDUIT TRENCHES AND BACK FILL AROUND SPLICE BOXES AND LIGHT POLES SHALL BE COMPLETED PRIOR TO FINAL ACCEPTANCE OF THE JOB. UPON APPROVAL OF THE COMPLETED INSTALLATION, THE TOWN WILL ISSUE A NOTICE TO PSEG TO ENERGIZE THE LIGHTS.

6. LIGHT FIXTURES: THE STREETLIGHT FIXTURES SHALL BE 70 WATT HIGH PRESSURE SODIUM VAPOR, COLONIAL STYLE, POST TOP FIXTURES EQUAL TO TOWN OF HUNTINGTON STANDARD SPECIFICATIONS (ITEM 1 ATTACHED). FIXTURES SHALL BE PAINTED BLACK. A CLEAR 70-WATT HIGH PRESSURE SODIUM VAPOR LAMP SUPPLIED BY AN APPROVED MANUFACTURER SHALL BE INSTALLED IN THE FIXTURE. A PHOTOELECTRIC CONTROL EQUAL TO TOWN OF HUNTINGTON STANDARD SPECIFICATIONS (ITEM 2 ATTACHED) SHALL BE INSTALLED IN THE FIXTURE. THE FIXTURE SHALL BE GROUNDED BY MEANS OF AN APPROVED GROUNDING LUG ASSEMBLY.

7. LIGHT POLES: THE FIXTURES SHALL BE INSTALLED ON BLACK, FIBERGLASS, PEDESTAL TYPE POLES EQUAL TO TOWN OF HUNTINGTON STANDARD SPECIFICATIONS (ITEM 3 ATTACHED). POLES SHALL BE DIRECT BURIAL TYPE WITH A FIXTURE MOUNTING HEIGHT OF 16 FEET ABOVE GRADE (19' OVERALL LENGTH WITH 3' EMBEDMENT IN THE GROUND). POLES SHALL BE INSTALLED LEVEL AND PLUMB AND SOIL THOROUGHLY COMPACTED AFTER INSTALLATION. POLES SHALL BE WIRED USING #12 AWG STRANDED COPPER WIRE, TYPE XLP-USE INSULATION. WIRE INSULATION SHALL BE COLOR-CODED ALONG ITS ENTIRE LENGTH AS FOLLOWS: BLACK-HOT LEG; WHITE-NEUTRAL; GREEN-GROUND.

8. CONDUIT: ALL UNDERGROUND ELECTRIC WIRE SHALL BE INSTALLED IN CONDUIT AT A MINIMUM DEPTH OF 24" BELOW FINAL GRADE. CONDUIT SHALL BE INSTALLED DIRECTLY BEHIND THE CURB UNLESS FIELD CONDITIONS PREVENT SUCH INSTALLATION. ANY SUCH DEVIATION SHALL REQUIRE PRIOR APPROVAL OF THE TOWN LIGHTING INSPECTOR. CONDUIT SHALL BE 1.25' DIAMETER, SCHEDULE 80 PVC HEAVY DUTY CONDUIT UNLESS LOCATED WITHIN AREAS SUBJECT TO VEHICLE WHEEL LOADS EXCEPTING DRIVEWAY APRONS SHALL BE 1.25 " GALVANIZED STEEL CONDUIT. CONDUIT SHALL ENTER/EXIT SPLICE BOXES FROM BELOW BY MEANS OF 220° CONDUIT SWEEPS. ALL CONDUIT SECTIONS SHALL BE JOINED AND BENDS FABRICATED USING APPROVED METHODS. BACKFILL SHALL BE FREE OF LARGE ROCKS, PAVING MATERIAL, CONSTRUCTION DEBRIS, WOOD, ETC.; AND SHALL BE THOROUGHLY COMPACTED AND GRADED. NO BACKFILLING OF TH TRENCH SHALL BE PERFORMED PRIOR TO INSPECTION AND APPROVAL BY THE TOWN LIGHTING INSPECTOR. PRIOR TO INSTALLATION OF THE CABLE, ALL CONDUIT RUNS SHALL BE INSPECTED TO CERTIFY THAT THE CONDUIT IS PROPERLY ALIGNED, CLEAN, AND SATISFACTORY FOR THE CABLE INSTALLATION.

9. UNDERGROUND ELECTRIC WIRING: UNDERGROUND STREETLIGHT WIRING SHALL BE #6 AWG, STRANDED COPPER WIRE, TYPE XLP-USE INSULATION, RATED FOR 600 VOLT OPERATION AND SHALL BE U.L. LISTED. WIRE INSTALLATION SHALL BE COLOR-CODED ALONG ITS ENTIRE LENGTH AS FOLLOWS: BLACK-HOT LEG; WHITE-NEUTRAL; GREEN-GROUND. ALL WIRE SPLICING SHALL BE PERFORMED INSIDE APPROVED SPLICE BOXES. ALL SPLICES AND CONNECTIONS SHALL BE PERFORMED BY QUALIFIED PERSONNEL, SHALL BE MADE USING APPROVED SPLIT-BOLT (BUG-NUT) CONNECTORS, AND SHALL BE INSULATED USING AN APPROVED WATERPROOF METHOD.

10. SPLICE BOXES: A SPLICE BOX FOR SPLICING AND FUSING SHALL BE INSTALLED AT THE BASE OF EACH STREETLIGHT POLE. THE SPLICE BOX SHALL BE EQUAL TO TOWN OF HUNTINGTON STANDARD SPECIFICATIONS (ITEM 4 ATTACHED). SPLICE BOXES SHALL BE INSTALLED DIRECTLY BEHIND THE CURB AND THE TOP OF THE BOX SHALL BE LEVEL WITH THE FINISHED GRADE. ANY SPLICE BOXES THAT SETTLE AFTER INSTALLATION WILL BE BROUGHT UP TO FINAL GRADE PRIOR TO FINAL ACCEPTANCE OF THE JOB. CONDUIT RUNS SHALL ENTER/EXIT SPLICE BOXES FROM BELOW BY MEANS OF 220° CONDUIT SWEEPS. EACH STREETLIGHT POLE SHALL BE INDIVIDUALLY FUSED IN THE SPLICE BOX USING A BUSSMAN #HEB-AA FUSEHOLDER AND BUSSMAN #FNM-10 FUSE OR APPROVED EQUAL.

11. ELECTRIC SERVICE BOXES: AN UNDERGROUND SERVICE SPLICE BOX SHALL BE INSTALLED AT THE POINT OF CONNECTION TO PSEG'S FACILITIES. THE SPLICE BOX SHALL BE EQUAL TO TOWN OF HUNTINGTON STANDARD SPECIFICATIONS (ITEM 4 ATTACHED). THE SERVICE BOX SHALL BE INSTALLED WITHIN ONE (1) FOOT OF PSEG'S SECONDARY SPLICE BOX AND THE COMPLETED INSTALLATION SHALL MEET ALL OF THE REQUIREMENTS OF PSEG. DIRECT BURIAL SERVICE CABLE SHALL BE INSTALLED FROM THE TOWN SERVICE BOX INTO PSEG'S SECONDARY SPLICE BOX AND A LENGTH OF SLACK CABLE SUFFICIENT FOR CONNECTION BY PSEG SHALL BE LEFT COILED INSIDE THE PSEG SECONDARY SPLICE BOX. SERVICE CABLE SHALL BE TWO (2) CONDUCTORS WITH GROUND, #6 AWG, STRANDED COPPER WIRE, TYPE XLP-USE, COLOR-CODED AS PER SECTION 9. EACH CIRCUIT SHALL BE FUSED INSIDE THE TOWN SERVICE SPLICE BOX USING A BUSSMAN #HEJ-BB FUESHOLDER AND A BUSSMAN #SC-35 FUSE OR APPROVED EQUAL.

IT WILL BE THE BUILDERS RESPONSIBILITY TO ASSURE THAT EACH PSEG SECONDARY SPLICE BOX PLANNED FOR UTILIZATION AS AN ELECTRIC SERVICE POINT INCLUDES THE RUD MULTIPLE SERVICE (CRAB/CANDELABRA) CONNECTOR'S REQUIRED FOR CONNECTION OF THE STREETLIGHTING SERVICE BY PSEG PERSONNEL.

12. REQUIRED SUBMISSIONS: PRIOR TO START OF THE WORK, THE BUILDER SHALL SUBMIT FOR APPROVAL THE MAKE, MODEL NUMBER, AND CATALOG CUTS FOR ALL EQUIPMENT PROPOSED FOR INSTALLATION.

13. IN ACCORDANCE WITH DARK SKY RECOMMENDATIONS ALL STREET LIGHTING SHALL BE 3,00 K OR WARMER. ADDITIONALLY, IN ORDER TO SAVE ENERGY AND LESSEN THE IMPACT ON HUMAN HEALTH AND THE ENVIRONMENT, THE EXTERIOR LIGHTING INSTALLED ON THE RESIDENTIAL PROPERTIES SHALL ALSO BE LED WITH A LIGHT TEMPERATURE OF 3,00 K OR WARMER.

LEGEND

✷	PROPOSED STREET LIGHT (SINGLE LUMINAIRE)
T	PROPOSED PSEG TRANSFORMER
SB	PROPOSED SPLICE BOX
— (E) — (E) —	(3) #6 AWG IN 1.25" GALVANIZED STEEL CONDUIT OR (3) #6 AWG IN 1 1/4" SCHEDULE 80 PVC CONDUIT

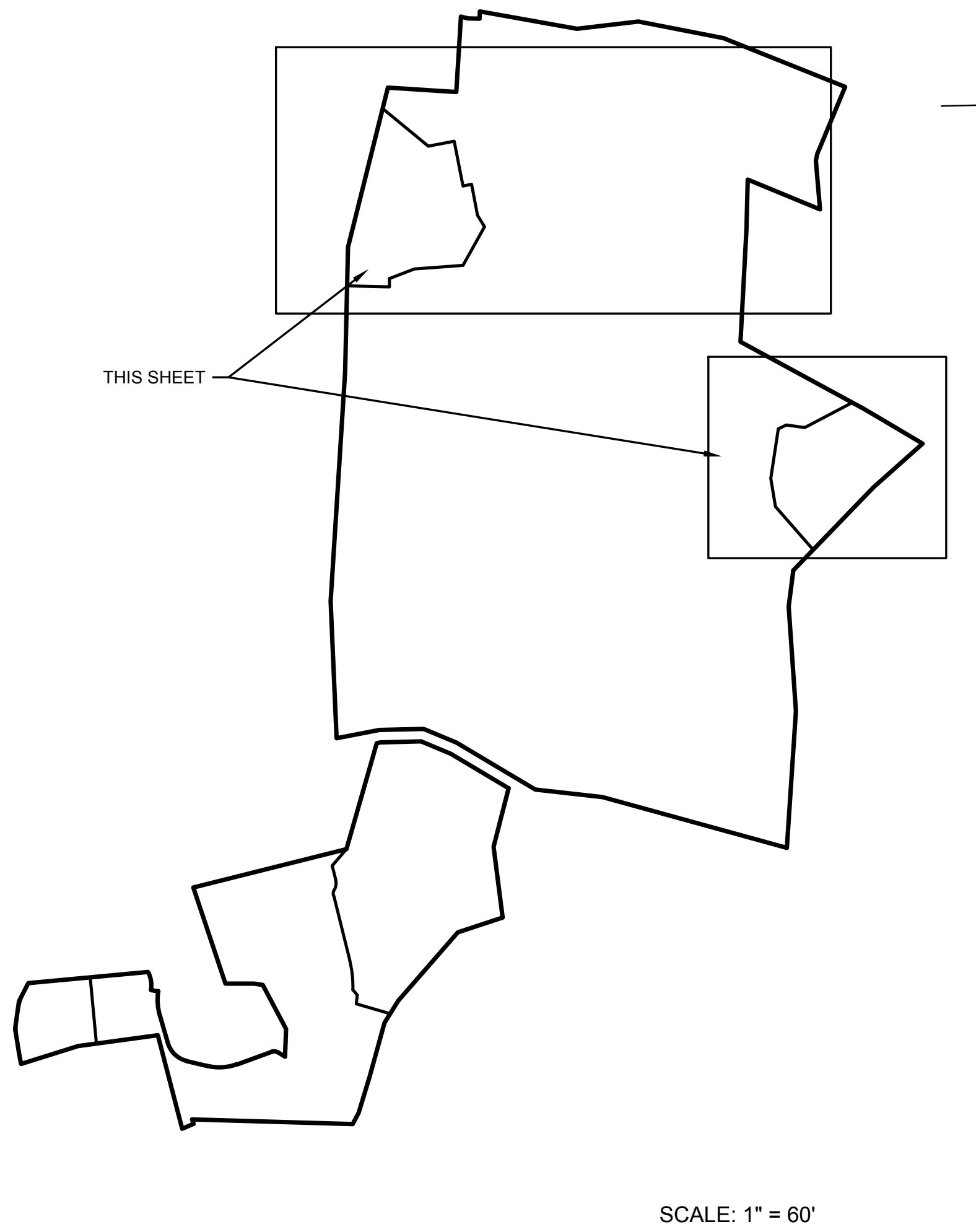

SCALE: 1" = 60'

0 30 60 100 200

LEGEND

EXISTING

P92.59	PAVEMENT ELEVATION	---94---	CONTOUR
TC92.59	TOP OF CURB ELEVATION	— E —	ELECTRIC
BC92.2	BOTTOM OF CURB ELEVATION	— W —	WATER
X92.0	SPOT ELEVATION	— G —	GAS
☒	ELECTRIC BOX	— X —	FENCE
▨	PULL BOX	— S —	SANITARY SEWER
	FIRE HYDRANT	— T —	TELEPHONE
G	GAS VALVE	— OHW —	OVERHEAD WIRE
WV	WATER VALVE	— D —	DRAINAGE
T	TRANSFORMER	— CATV —	TELEVISION
	ELECTRIC POLE	◎	DRAINAGE MANHOLE
✲	LIGHT POLE	▦	CATCH BASINS
⊠	HIGH TENSION TOWER		TREE TO BE REMOVED
W.M.	WATER MAIN		
W.S.	WATER SERVICE		TREE TO REMAIN
G.M.	GAS MAIN	□	MONUMENT

PROPOSED

(TC92.00)	TOP OF CURB ELEVATION	— (W) —	WATER
(BC91.5)	BOTTOM OF CURB ELEVATION	— (FS) —	FIRE SERVICE
x(92.0)	SPOT ELEVATION	— (WS) —	WATER SERVICE
LP	LEACHING POOL	— (E) —	ELECTRIC
CB	CATCH BASIN	— (G) —	GAS
SMH	SANITARY MANHOLE	— X —	FENCE
DMH	DRAINAGE MANHOLE	— (HC) —	SANITARY HOUSE CONNECTION
—(93)—	CONTOUR	— (D) —	DRAINAGE
◉	LEACHING POOL W/ OPEN GRATE	— (RD) —	ROOF DRAIN
○	LEACHING POOL W/ SOLID COVER	— (T) —	TELEPHONE
▣	DRAINAGE BASIN	— (CATV) —	TELEVISION
■	CATCH BASIN (TC ~ TOP OF CURB BOX)	/ — / — /	LIMIT OF CLEARING AND GRADING DURING CONSTRUCTION
	HYDRANT	▨	CONCRETE SIDEWALK / CONCRETE APRON
⊕ PS	STREET TREE W / SYMBOL		

FOR TOWN USE

No.	REVISION	DATE

OWNER
I.H.C.C., INC. AND
ROBERG REVOCABLE TRUST
21 BREEZE HILL ROAD
NORTHPORT, NY, 11768
(631) 261 - 5700

APPLICANT:
THE PRESERVE AT INDIAN HILLS
1 RABRO DRIVE, SUITE 100
HAUPPAUGE, N.Y. 11788
(631) 351 - 4000

LIGHTING PLAN - NORTH PARCEL
FOR
THE PRESERVE AT INDIAN HILLS
SITUATED AT
NORTHPORT
TOWN OF HUNTINGTON, SUFFOLK COUNTY, NEW YORK
S.C.T.M.: DISTRICT: 0400, SECT. 014, BLK. 04, LOTS 1 AND 2
DISTRICT 0400, SECT. 015, BLK. 01, LOTS 3.1, 3.2, 11, 12, 16, 19 AND P/O 22

THOMAS CHARLES DIXON
080916

NELSON + POPE
engineers • architects • surveyors
70 Maxess Road, Melville, NY 11747 • 631.427.5665 • nelsonpope.com

DRAWN BY: GEO	CADD No.: 86047 CSP 2021.DWG	SCALE:	DRAWING NO.:	LI - 101
CHECKED BY: JM	FILE NO.: 400-014	1"=60'		
DATE: OCTOBER, 2021	PROJECT NO.: 86047		SHEET NO.:	33 OF 44

G:\projects\86047\FINALS\CONDOMINIUM\86047 CSP 2021.dwg, 33 OF 44 LIGHTING PLAN - NORTH PARCEL, 10/11/2021 2:58:21 PM

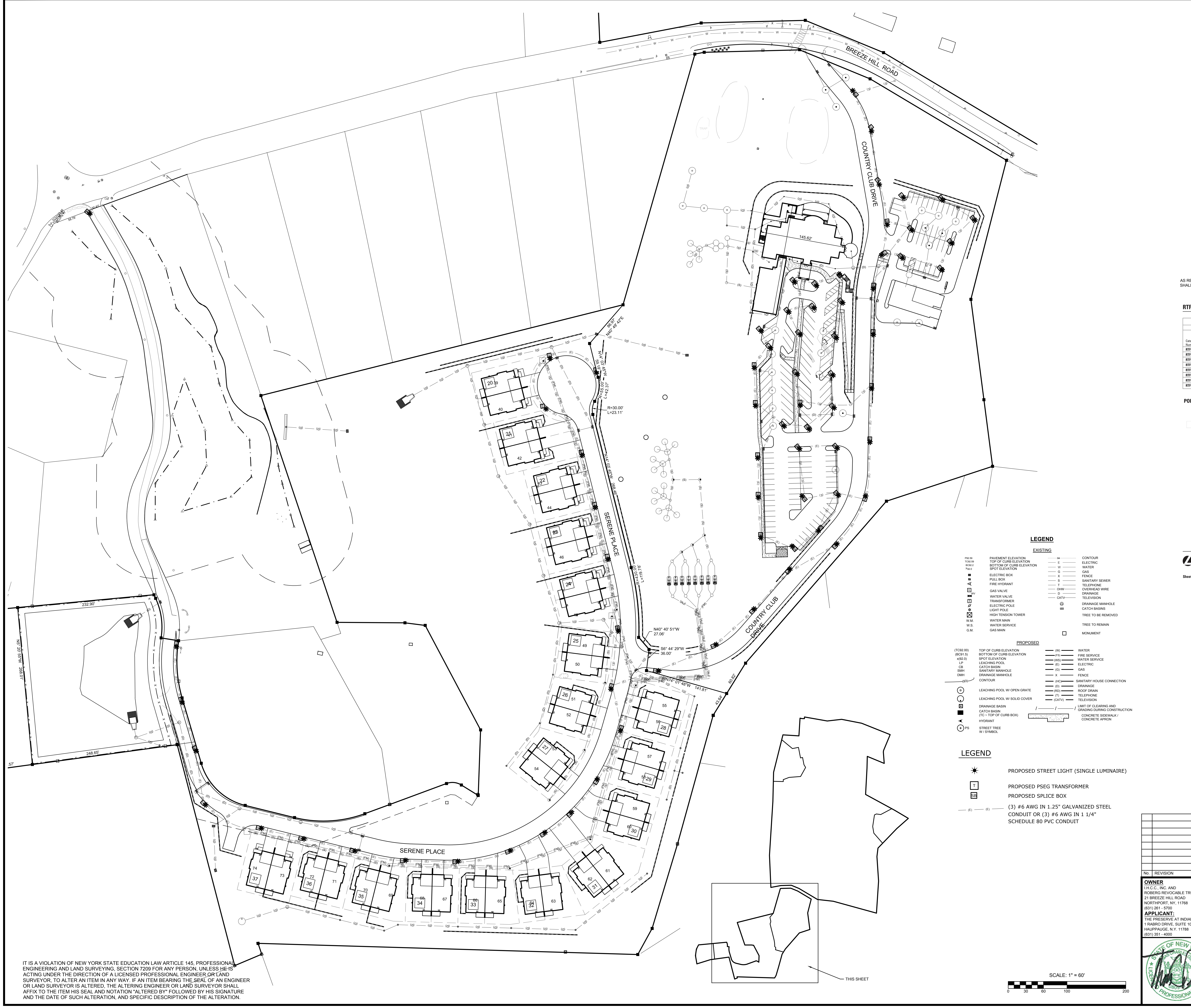

SCALE: 1" = 60'

0 30 60 100 200

IT IS A VIOLATION OF NEW YORK STATE EDUCATION LAW ARTICLE 145, PROFESSIONAL ENGINEERING AND LAND SURVEYING, SECTION 7209 FOR ANY PERSON, UNLESS HE IS ACTING UNDER THE DIRECTION OF A LICENSED PROFESSIONAL ENGINEER OR LAND SURVEYOR, TO ALTER AN ITEM IN ANY WAY. IF AN ITEM BEARING THE SEAL OF AN ENGINEER OR LAND SURVEYOR IS ALTERED, THE ALTERING ENGINEER OR LAND SURVEYOR SHALL AFFIX TO THE ITEM HIS SEAL AND NOTATION "ALTERED BY" FOLLOWED BY HIS SIGNATURE AND THE DATE OF SUCH ALTERATION, AND SPECIFIC DESCRIPTION OF THE ALTERATION.

American Revolution Full Cutoff LED
Series 247CL

PRODUCT OVERVIEW

SERIES 247CL

Features:

- Die-cast aluminum housing and hood for long-life performance
- Die-cast trigger latch (TL) and captive thumb screws option available for easy access to internal components
- Optical assembly designed for maximum performance, available in Type II, Type III and Type V
- Hinged hood and captive thumb screws provision afford quick, easy access to electrical and optical area for servicing
- Slipfitter with three set screws allows secure installation to pole sizes 2-3/8" or 3" O.D.
- Surge protection device (standard) exceeds ANSI C62.41 Category C1 criteria (surge tested at 10kV/5kA)
- Complies with ANSI: C136.2, C136.10, C136.15
- CSA listed and suitable for up to 30°C ambient
- Rated L70, LED life greater than 100,000 hours at 25°C
- Replaces up to 150W HPS light source incumbant models
- LED electronic 0V-10V dimmable driver
- DesignLights Consortium® (DLC) qualified product. Not all versions of this product may be DLC qualified. Please check the DLC Qualified Products List at www.designlights.org/QPL to confirm which versions are qualified.

Applications:

Streetscapes
Walkways
Pathways
Parks

CAT. # 247CL 20LEDE70 MVOLT 3,000 K R3 PCLL

DIMENSIONS

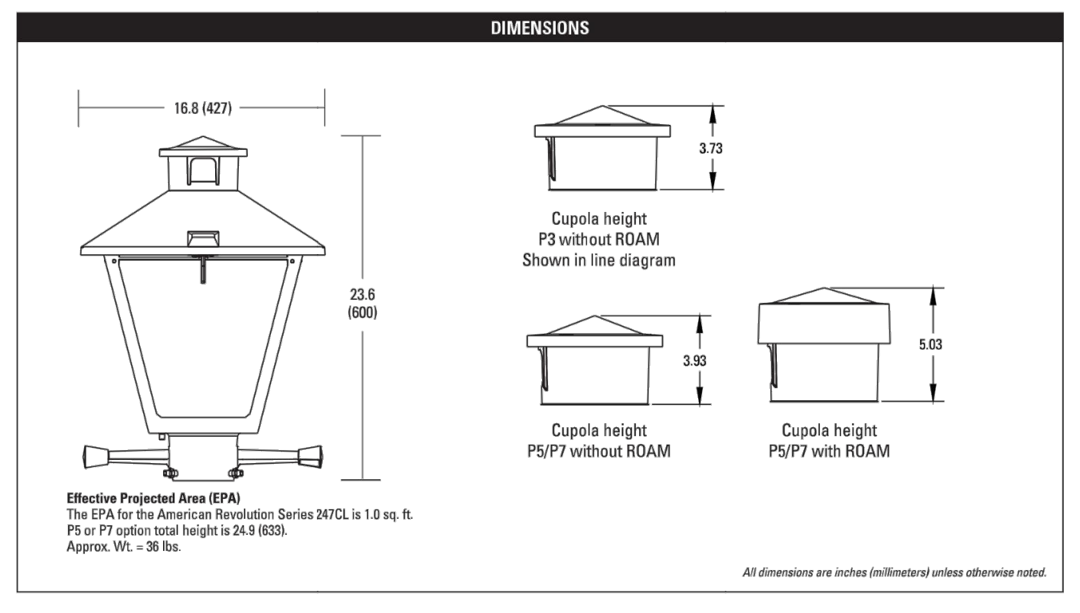
16.8 (427)
23.6 (600)
3.73
Cupola height P3 without ROAM Shown in line diagram
3.93
Cupola height P5/P7 without ROAM
5.03
Cupola height P5/P7 with ROAM

Effective Projected Area (EPA)
The EPA for the American Revolution Series 247CL is 1.0 sq. ft.
P5 or P7 option total height is 24.9 (633).
Approx. Wt. = 36 lbs.

All dimensions are inches (millimeters) unless otherwise noted.

AS REQUIRED BY DARK SKY RECOMMENDATIONS ALL LED LIGHTING SHALL BE COLOR TEMPERATURE OF 3,000 K OR WARMER.

American Electric Lighting

RTFDB Round Tapered Fiberglass Poles - Direct Burial

TECHNICAL INFORMATION

			EPA (ft²) with 1.3 gust				
Catalog Number	Nominal fixture mounting height (feet)	Pole shaft size (in x in x ft)	80 mph	90 mph	100 mph	Max. weight	Approximate ship weight (pounds)
RTFDB 18 6X	14	6.5 x 4.1 x 18	14.0	10.4	7.9	150	34
RTFDB 20 6-6X	16	6.7 x 4.1 x 20	10.0	7.4	5.5	100	38
RTFDB 24 6-7X	20	6.7 x 4.1 x 24	8.2	5.8	4.1	150	46
RTFDB 30 8-3X	25	8.2 x 4.5 x 30	6.2	4.7	3.6	100	71
RTFDB 30 8-4X	25	8.4 x 4.7 x 30	14.5	11.2	8.9	200	98
RTFDB 35 8-4X	30	8.4 x 4.7 x 35	10.5	8.0	6.2	200	116
RTFDB 35 8-5X	30	8.5 x 4.9 x 35	14.8	11.4	9.0	300	153
RTFDB 41 11-8X	35	11.8 x 6.4 x 41	14.3	10.8	7.8	300	218

POLE DETAIL

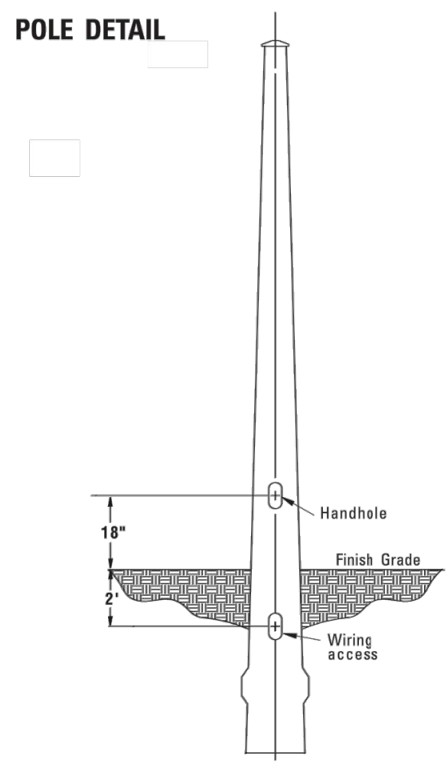

IMPORTANT:

- These specifications are intended for general purposes only. Lithonia reserves the right to change material or design, without prior notice, in a continuing effort to upgrade its products.

LITHONIA LIGHTING®
An Acuity Brands Company

Sheet #: Pole-RTFDB

© 1998-2010 Acuity Brands Lighting, Inc. All rights reserved. Rev. 5/11/10

Lithonia Lighting
Outdoor
One Lithonia Way, Conyers, GA 30012
Phone: 770-922-9000 Fax: 770-918-1209
www.lithonia.com

LEGEND

EXISTING

P92.59	PAVEMENT ELEVATION	94	CONTOUR
TC92.59	TOP OF CURB ELEVATION	E	ELECTRIC
BC92.2	BOTTOM OF CURB ELEVATION	W	WATER
X92.0	SPOT ELEVATION	G	GAS
☒	ELECTRIC BOX	X	FENCE
▨	PULL BOX	S	SANITARY SEWER
	FIRE HYDRANT	T	TELEPHONE
G	GAS VALVE	OHW	OVERHEAD WIRE
WV	WATER VALVE	D	DRAINAGE
T	TRANSFORMER	CATV	TELEVISION
	ELECTRIC POLE		DRAINAGE MANHOLE
✲	LIGHT POLE	▦	CATCH BASINS
☒	HIGH TENSION TOWER		TREE TO BE REMOVED
W.M.	WATER MAIN		TREE TO REMAIN
W.S.	WATER SERVICE	☐	MONUMENT
G.M.	GAS MAIN		

PROPOSED

(TC92.00)	TOP OF CURB ELEVATION	(W)	WATER
(BC91.5)	BOTTOM OF CURB ELEVATION	(FS)	FIRE SERVICE
x(92.0)	SPOT ELEVATION	(WS)	WATER SERVICE
LP	LEACHING POOL	(E)	ELECTRIC
CB	CATCH BASIN	(G)	GAS
SMH	SANITARY MANHOLE	X	FENCE
DMH	DRAINAGE MANHOLE	(HC)	SANITARY HOUSE CONNECTION
(93)	CONTOUR	(D)	DRAINAGE
○	LEACHING POOL W/ OPEN GRATE	(RD)	ROOF DRAIN
○	LEACHING POOL W/ SOLID COVER	(T)	TELEPHONE
⊡	DRAINAGE BASIN	(CATV)	TELEVISION
■	CATCH BASIN (TC ~ TOP OF CURB BOX)	/ / /	LIMIT OF CLEARING AND GRADING DURING CONSTRUCTION
	HYDRANT		CONCRETE SIDEWALK / CONCRETE APRON
⊕ PS	STREET TREE W / SYMBOL		

LEGEND

✲	PROPOSED STREET LIGHT (SINGLE LUMINAIRE)
T	PROPOSED PSEG TRANSFORMER
SB	PROPOSED SPLICE BOX
(E) (E)	(3) #6 AWG IN 1.25" GALVANIZED STEEL CONDUIT OR (3) #6 AWG IN 1 1/4" SCHEDULE 80 PVC CONDUIT

FOR TOWN USE

No.	REVISION	DATE

OWNER
I.H.C.C., INC. AND
ROBERG REVOCABLE TRUST
21 BREEZE HILL ROAD
NORTHPORT, NY, 11768
(631) 261 - 5700

APPLICANT:
THE PRESERVE AT INDIAN HILLS
1 RABRO DRIVE, SUITE 100
HAUPPAUGE, N.Y. 11788
(631) 351 - 4000

LIGHTING PLAN - SOUTH PARCEL
FOR
THE PRESERVE AT INDIAN HILLS
SITUATED AT
NORTHPORT
TOWN OF HUNTINGTON, SUFFOLK COUNTY, NEW YORK
S.C.T.M.: DISTRICT: 0400, SECT. 014, BLK. 04, LOTS 1 AND 2
DISTRICT 0400, SECT. 015, BLK. 01, LOTS 3.1, 3.2, 11, 12, 16, 19 AND P/O 22

THOMAS CHARLES DIXON

NELSON + POPE
engineers • architects • surveyors
70 Maxess Road, Melville, NY 11747 • 631.427.5665 • nelsonpope.com

DRAWN BY: GEO	CADD No.: 86047 CSP 2021.DWG	SCALE: 1"=60'	DRAWING NO.: LI - 102	
CHECKED BY: JM	FILE NO.: 400-014			
DATE: OCTOBER, 2021	PROJECT NO.: 86047		SHEET NO.: 34 OF 44	

G:\projects\86047\FINALS\CONDOMINIUM\86047 CSP 2021.dwg, 34 OF 44 LIGHTING PLAN - SOUTH PARCEL, 10/11/2021 3:00:41 PM

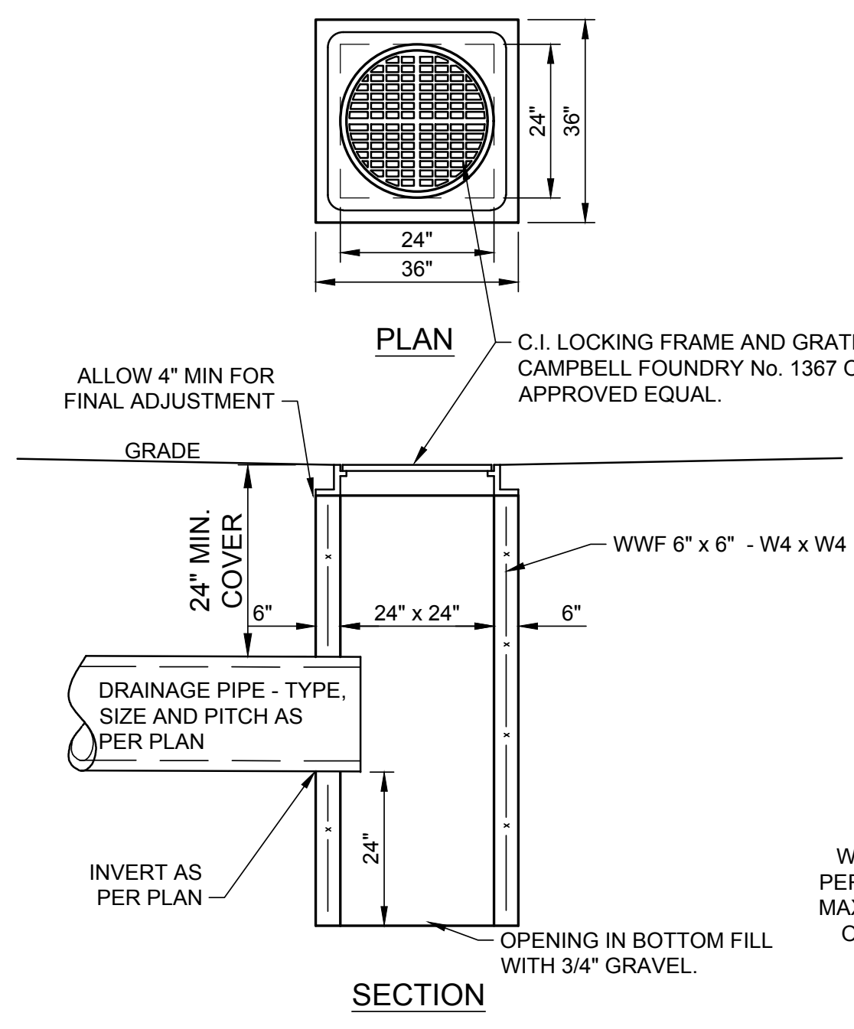
24"
36"
24"
36"
PLAN
C.I. LOCKING FRAME AND GRATE, CAMPBELL FOUNDRY No. 1367 OR APPROVED EQUAL.
ALLOW 4" MIN FOR FINAL ADJUSTMENT
GRADE
24" MIN. COVER
WWF 6" x 6" - W4 x W4
6"
24" x 24"
6"
DRAINAGE PIPE - TYPE, SIZE AND PITCH AS PER PLAN
24"
INVERT AS PER PLAN
OPENING IN BOTTOM FILL WITH 3/4" GRAVEL.
SECTION

DRAINAGE BASIN DETAIL
DB
NOT TO SCALE

NOTES:
1. CONCRETE TO BE 1:2:4 MIX WITH A 4" - 5" SLUMP AND AGGREGATE PASSING THE 3/4" SIEVE.
2. ALL DRAINAGE PIPES MUST BE PROVIDED WITH A MINIMUM COVER OF 2' - 0".
3. ALL CONCRETE TO BE 4,000 PSI, AT 28 DAYS, AND AIR ENTRAINED.
4. WWF SHALL MEET A82 AND A185. REBAR SHALL MEET ASTM A615, GRADE 60.
5. WINDOW TO BE CAST IN STRUCTURE AS REQUIRED. KNOCK-OUT PANELS WILL NOT BE PERMITTED.

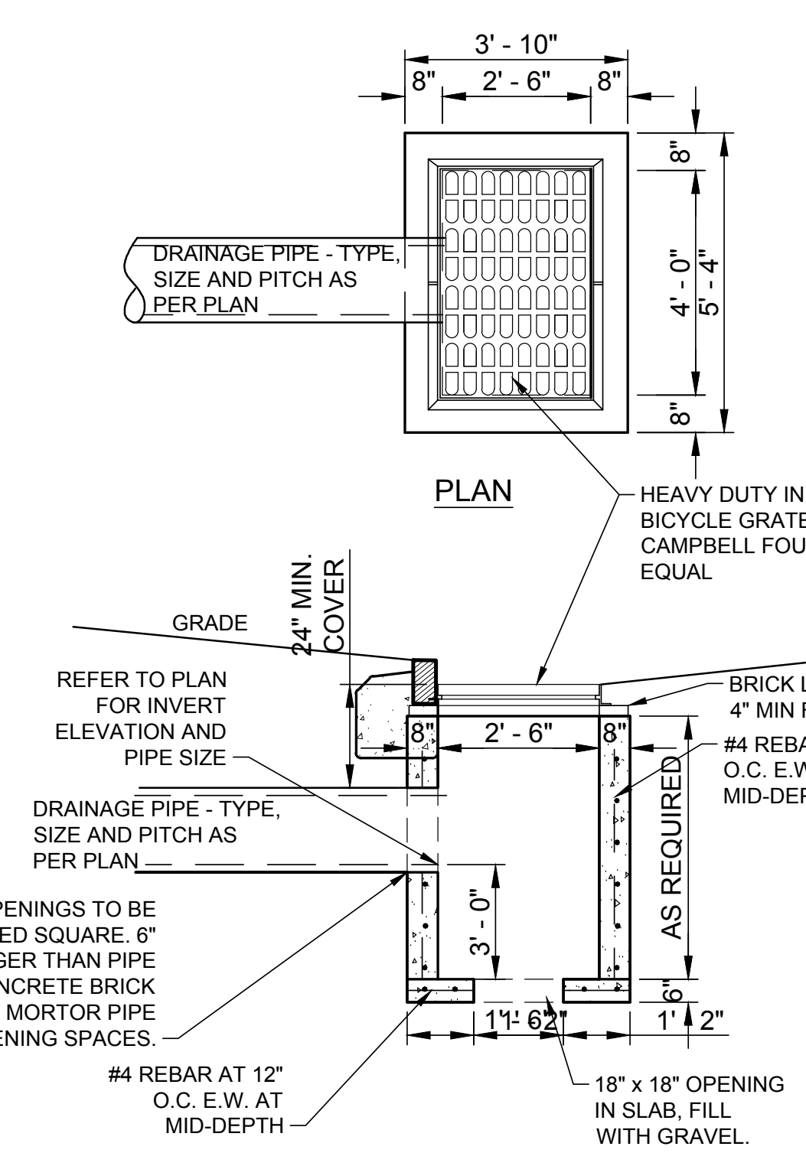
3' - 10"
8"
2' - 6"
8"
DRAINAGE PIPE - TYPE, SIZE AND PITCH AS PER PLAN
8"
4' - 0"
5' - 4"
8"
PLAN
HEAVY DUTY INLET FRAME WITH BICYCLE GRATE. CAMPBELL FOUNDRY No. 3408 OR EQUAL
GRADE
24" MIN. COVER
REFER TO PLAN FOR INVERT ELEVATION AND PIPE SIZE
BRICK LEVELING COURSE, ALLOW 4" MIN FOR FINAL ADJUSTMENT
8"
2' - 6"
8"
#4 REBAR AT 12" O.C. E.W. AT MID-DEPTH
AS REQUIRED
DRAINAGE PIPE - TYPE, SIZE AND PITCH AS PER PLAN
WALL OPENINGS TO BE PERFORMED SQUARE. 6" MAX. LARGER THAN PIPE O.D. CONCRETE BRICK AND MORTOR PIPE OPENING SPACES.
3' - 0"
6"
1'
1'- 6"
1'
2"
#4 REBAR AT 12" O.C. E.W. AT MID-DEPTH
18" x 18" OPENING IN SLAB, FILL WITH GRAVEL.
SECTION

CATCH BASIN DETAIL
TYPE 1
NOT TO SCALE

NOTES:
1. CONCRETE TO BE 1:2:4 MIX 4" - 5" SLUMP AGGREGATE PASSING 3/4" SIEVE.
2. ALL DRAINAGE PIPES MUST BE PROVIDED WITH A MINIMUM COVER OF 2' - 0".
3. ALL CONCRETE TO BE 4,000 PSI. AT 28 DAYS.
4. WWF A82 AND A185, REBAR ASTM A615, GRADE 60
5. W.W.M. : 6" x 6" - 4/4 Fs= 60,000 P.S.I.,A.S.T.M. A-185 PROVIDE 1 1/2" COVER AT ENDS OF VERTICAL WIRES, 1" RADIUS BENDS AT CORNERS.
6. UTILIZE 4 LIFT HOLES FOR HANDLING.
7. WINDOW TO BE CAST IN STRUCTURE AS REQUIRED. KNOCK-OUT PANELS WILL NOT BE PERMITTED.

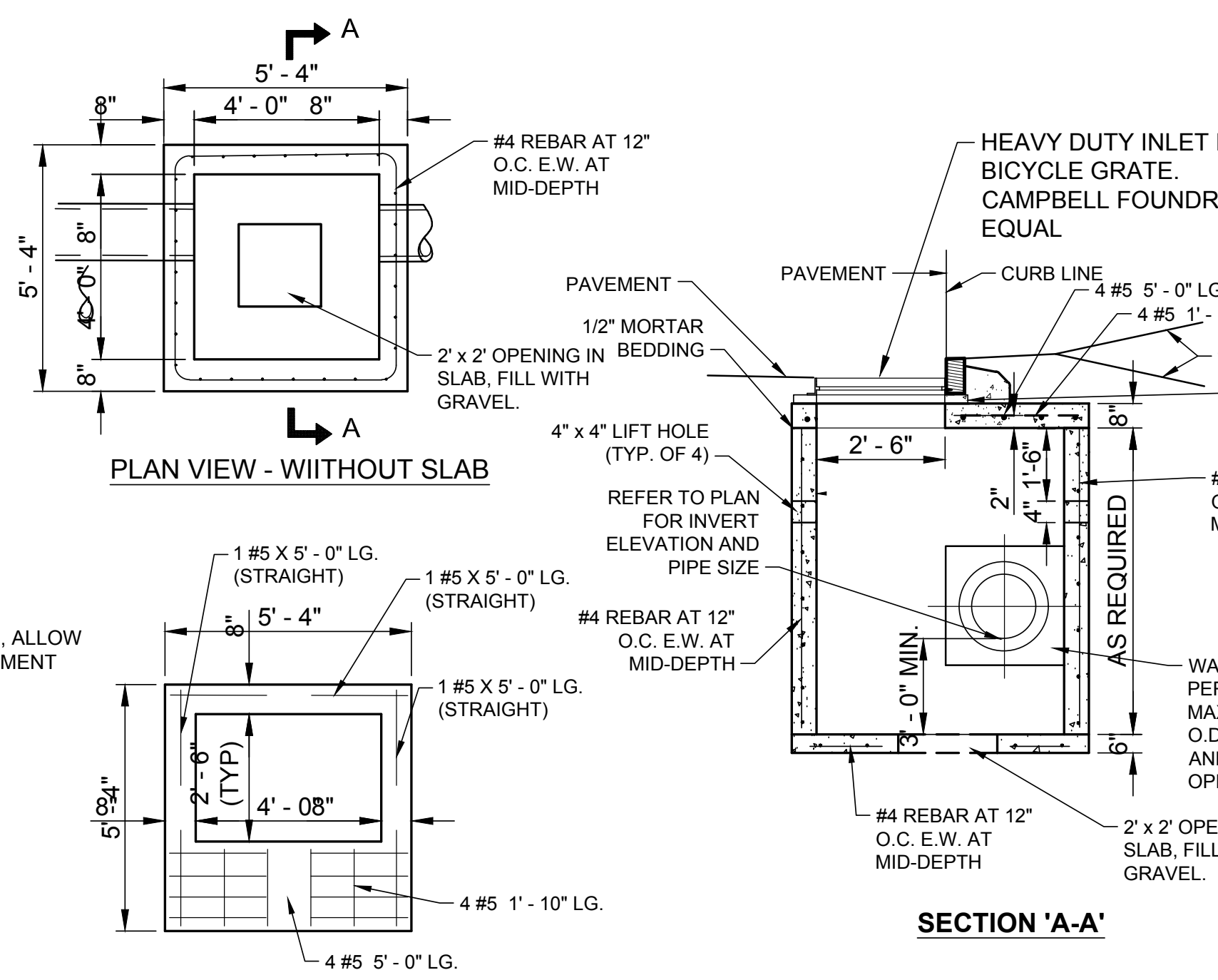
A
5' - 4"
8"
4' - 0"
8"
#4 REBAR AT 12" O.C. E.W. AT MID-DEPTH
5' - 4"
8"
4' - 0"
8"
2' x 2' OPENING IN SLAB, FILL WITH GRAVEL.
A
PLAN VIEW - WIITHOUT SLAB
1 #5 X 5' - 0" LG. (STRAIGHT)
1 #5 X 5' - 0" LG. (STRAIGHT)
8"
5' - 4"
1 #5 X 5' - 0" LG. (STRAIGHT)
2' - 6" (TYP)
4' - 08"
5'-4"
4 #5 1' - 10" LG.
4 #5 5' - 0" LG.
PLAN VIEW - SLAB
HEAVY DUTY INLET FRAME WITH BICYCLE GRATE. CAMPBELL FOUNDRY No. 3408 OR EQUAL
PAVEMENT
PAVEMENT
CURB LINE
4 #5 5' - 0" LG.
4 #5 1' - 10" LG.
1 ON 3 MAX
1/2" MORTAR BEDDING
BRICK LEVELING COURSE, ALLOW 4" MIN FOR FINAL ADJUSTMENT
4" x 4" LIFT HOLE (TYP. OF 4)
2' - 6"
8"
2"
4"
1'-6"
#4 REBAR AT 12" O.C. E.W. AT MID-DEPTH
REFER TO PLAN FOR INVERT ELEVATION AND PIPE SIZE
#4 REBAR AT 12" O.C. E.W. AT MID-DEPTH
3' - 0" MIN.
AS REQUIRED
WALL OPENINGS TO BE PERFORMED SQUARE. 6" MAX. LARGER THAN PIPE O.D. CONCRETE BRICK AND MORTOR PIPE OPENING SPACES.
6"
#4 REBAR AT 12" O.C. E.W. AT MID-DEPTH
2' x 2' OPENING IN SLAB, FILL WITH GRAVEL.
SECTION 'A-A'

CATCH BASIN DETAIL
TYPE 3
NOT TO SCALE

NOTES:
1. CONCRETE TO BE 1:2:4 MIX 4" - 5" SLUMP AGGREGATE PASSING 3/4" SIEVE.
2. ALL DRAINAGE PIPES MUST BE PROVIDED WITH A MINIMUM COVER OF 2' - 0".
3. ALL CONCRETE TO BE 4,000 PSI. AT 28 DAYS.
4. WWF A82 AND A185, REBAR ASTM A615, GRADE 60
5. W.W.M. : 6" x 6" - 4/4 Fs= 60,000 P.S.I.,A.S.T.M. A-185 PROVIDE 1 1/2" COVER AT ENDS OF VERTICAL WIRES, 1" RADIUS BENDS AT CORNERS.
6. UTILIZE 4 LIFT HOLES FOR HANDLING.
7. WINDOW TO BE CAST IN STRUCTURE AS REQUIRED. KNOCK-OUT PANELS WILL NOT BE PERMITTED.

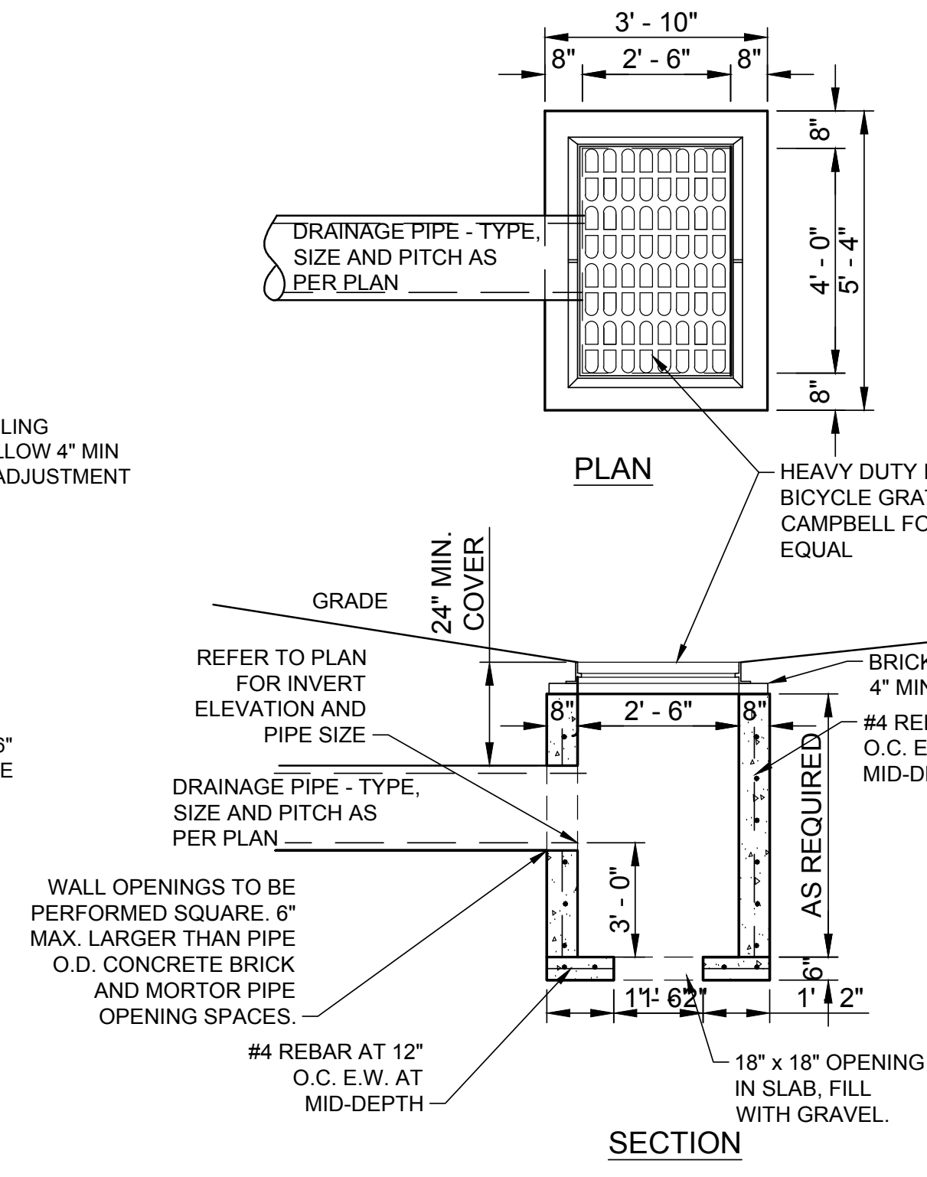
3' - 10"
8"
2' - 6"
8"
DRAINAGE PIPE - TYPE, SIZE AND PITCH AS PER PLAN
8"
4' - 0"
5' - 4"
8"
PLAN
HEAVY DUTY INLET FRAME WITH BICYCLE GRATE. CAMPBELL FOUNDRY No. 3408 OR EQUAL
GRADE
24" MIN. COVER
REFER TO PLAN FOR INVERT ELEVATION AND PIPE SIZE
BRICK LEVELING COURSE, ALLOW 4" MIN FOR FINAL ADJUSTMENT
8"
2' - 6"
8"
#4 REBAR AT 12" O.C. E.W. AT MID-DEPTH
AS REQUIRED
DRAINAGE PIPE - TYPE, SIZE AND PITCH AS PER PLAN
WALL OPENINGS TO BE PERFORMED SQUARE. 6" MAX. LARGER THAN PIPE O.D. CONCRETE BRICK AND MORTOR PIPE OPENING SPACES.
3' - 0"
6"
1'
1'- 6"
1'
2"
#4 REBAR AT 12" O.C. E.W. AT MID-DEPTH
18" x 18" OPENING IN SLAB, FILL WITH GRAVEL.
SECTION

OVERFLOW CATCH BASIN DETAIL
TYPE 4
NOT TO SCALE

NOTES:
1. CONCRETE TO BE 1:2:4 MIX 4" - 5" SLUMP AGGREGATE PASSING 3/4" SIEVE.
2. ALL DRAINAGE PIPES MUST BE PROVIDED WITH A MINIMUM COVER OF 2' - 0".
3. ALL CONCRETE TO BE 4,000 PSI. AT 28 DAYS.
4. WWF A82 AND A185, REBAR ASTM A615, GRADE 60
5. W.W.M. : 6" x 6" - 4/4 Fs= 60,000 P.S.I.,A.S.T.M. A-185 PROVIDE 1 1/2" COVER AT ENDS OF VERTICAL WIRES, 1" RADIUS BENDS AT CORNERS.
6. UTILIZE 4 LIFT HOLES FOR HANDLING.
7. WINDOW TO BE CAST IN STRUCTURE AS REQUIRED. KNOCK-OUT PANELS WILL NOT BE PERMITTED.

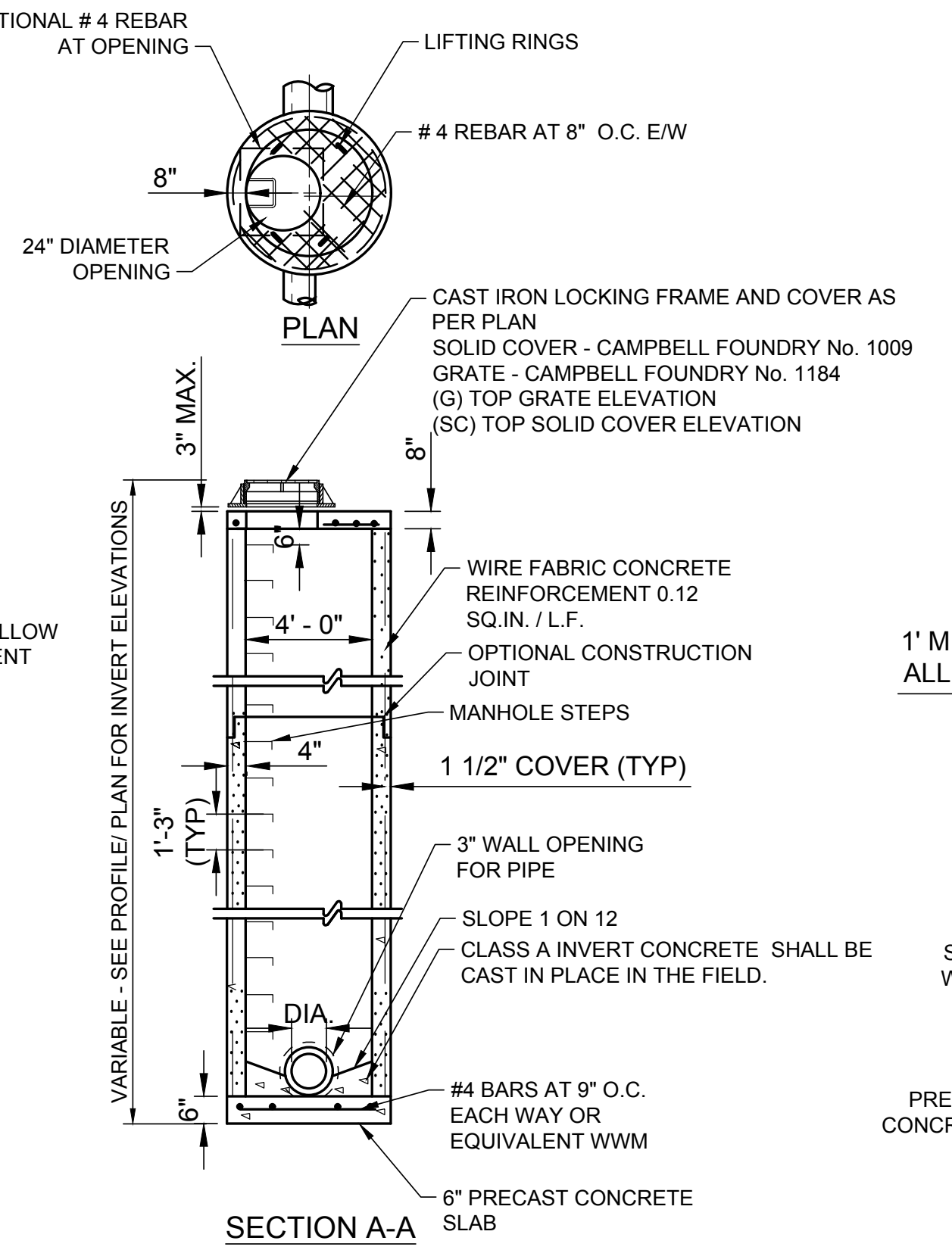
ADDITIONAL # 4 REBAR AT OPENING
LIFTING RINGS
# 4 REBAR AT 8" O.C. E/W
8"
24" DIAMETER OPENING
PLAN
CAST IRON LOCKING FRAME AND COVER AS PER PLAN
SOLID COVER - CAMPBELL FOUNDRY No. 1009
GRATE - CAMPBELL FOUNDRY No. 1184
(G) TOP GRATE ELEVATION
(SC) TOP SOLID COVER ELEVATION
3" MAX.
8"
6"
VARIABLE - SEE PROFILE/ PLAN FOR INVERT ELEVATIONS
WIRE FABRIC CONCRETE REINFORCEMENT 0.12 SQ.IN. / L.F.
4' - 0"
OPTIONAL CONSTRUCTION JOINT
MANHOLE STEPS
4"
1 1/2" COVER (TYP)
1'-3" (TYP)
3" WALL OPENING FOR PIPE
SLOPE 1 ON 12
CLASS A INVERT CONCRETE SHALL BE CAST IN PLACE IN THE FIELD.
DIA.
6"
#4 BARS AT 9" O.C. EACH WAY OR EQUIVALENT WWM
6" PRECAST CONCRETE SLAB
SECTION A-A

DRAINAGE MANHOLE DETAIL
DMH ON-SITE
NOT TO SCALE

NOTES:
1. CONCRETE TO BE 1:2:4 MIX WITH A 4" - 5" SLUMP AND AGGREGATE PASSING THE 3/4" SIEVE.
2. ALL DRAINAGE PIPES MUST BE PROVIDED WITH A MINIMUM COVER OF 2' - 0".
3. ALL CONCRETE TO BE 4,000 PSI, AT 28 DAYS, AND AIR ENTRAINED.
4. WWF SHALL MEET A82 AND A185. REBAR SHALL MEET ASTM A615, GRADE 60.
5. MANHOLE STEPS TO BE COPOLYMER POLYPROPYLENE, WITH 1/2" REINFORCING BAR.

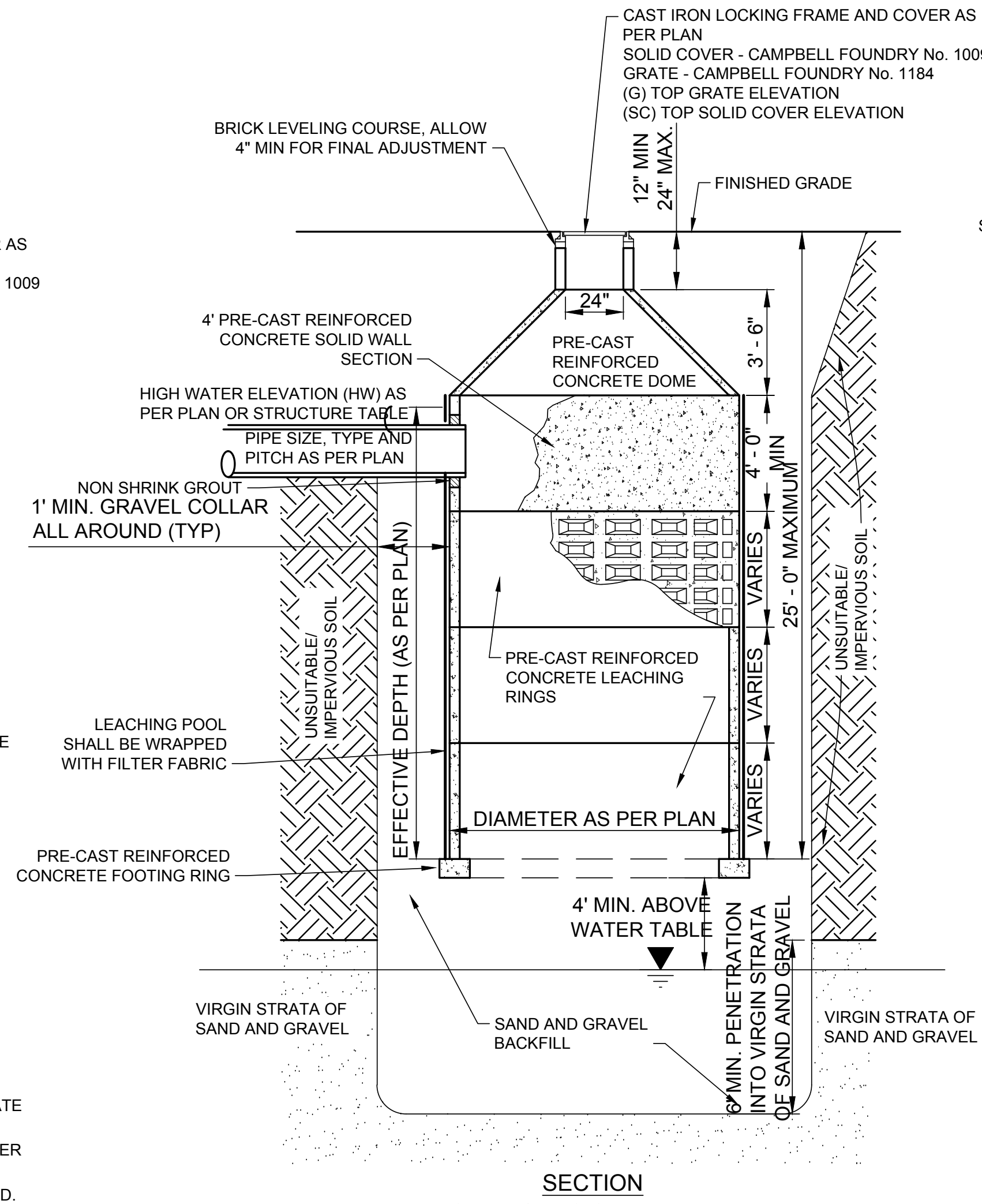
CAST IRON LOCKING FRAME AND COVER AS PER PLAN
SOLID COVER - CAMPBELL FOUNDRY No. 1009
GRATE - CAMPBELL FOUNDRY No. 1184
(G) TOP GRATE ELEVATION
(SC) TOP SOLID COVER ELEVATION
BRICK LEVELING COURSE, ALLOW 4" MIN FOR FINAL ADJUSTMENT
12" MIN 24" MAX.
FINISHED GRADE
24"
3' - 6"
4' PRE-CAST REINFORCED CONCRETE SOLID WALL SECTION
PRE-CAST REINFORCED CONCRETE DOME
HIGH WATER ELEVATION (HW) AS PER PLAN OR STRUCTURE TABLE
PIPE SIZE, TYPE AND PITCH AS PER PLAN
NON SHRINK GROUT
1' MIN. GRAVEL COLLAR ALL AROUND (TYP)
4' - 0" MIN
VARIES
VARIES
VARIES
25' - 0" MAXIMUM
UNSUITABLE/ IMPERVIOUS SOIL
EFFECTIVE DEPTH (AS PER PLAN)
UNSUITABLE/ IMPERVIOUS SOIL
PRE-CAST REINFORCED CONCRETE LEACHING RINGS
LEACHING POOL SHALL BE WRAPPED WITH FILTER FABRIC
DIAMETER AS PER PLAN
PRE-CAST REINFORCED CONCRETE FOOTING RING
4' MIN. ABOVE WATER TABLE
VIRGIN STRATA OF SAND AND GRAVEL
SAND AND GRAVEL BACKFILL
6' MIN. PENETRATION INTO VIRGIN STRATA OF SAND AND GRAVEL
VIRGIN STRATA OF SAND AND GRAVEL
SECTION

LEACHING POOL DETAIL TYPE B
LP (T-B)
NOT TO SCALE

NOTES:
1. ALL DRAINAGE PIPES MUST BE PROVIDED WITH A MINIMUM 2'-0" OF COVER AND ENTER A SOLID WALL SECTION.
2. ANY UNSUITABLE MATERIAL UNDER THE LEACHING BASIN SHALL BE EXCAVATED AND REMOVED UNTIL A VIRGIN STRATA OF SAND AND GRAVEL IS ENCOUNTERED. AN ADDITIONAL 6' IS THEN TO BE EXCAVATED INTO THE VIRGIN SAND AND GRAVEL. ALL BACKFILL MUST BE CLEAN AND ACCEPTABLE MATERIAL PLACED UNDER THE SUPERVISION OF THE TOWN ENGINEER. PROVIDE 2" OF CLEAN SAND AND GRAVEL INSIDE THE BASE OF THE BASIN.
3. TOP DOME SHALL BE DESIGNED FOR AASHTO H-20 LOADING.
4. FILTER FABRIC SHALL BE MIRAFI 160N OR APPOVED EQUAL. (MAXIMUM APPARENT OPENING SIZE (AOS)SHALL BE 0.212 MM AS PER ASTM D4751).
5. CONCRETE: 4,000 PSI AT 28 DAYS.
6. ALL PRECAST DRAINAGE STRUCTURES SHALL BE FURNISHED WITH PRECAST OPENINGS FOR DRAINAGE PIPE. KNOCK-OUT PANELS WILL NOT BE ACCEPTED.

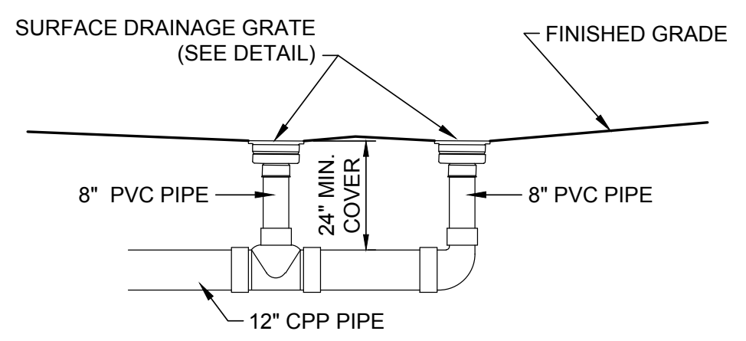
SURFACE DRAINAGE GRATE (SEE DETAIL)
FINISHED GRADE
8" PVC PIPE
24" MIN. COVER
8" PVC PIPE
12" CPP PIPE

INLINE DRAIN DETAIL
NOT TO SCALE

NOTE: PVC SHALL BE (SCHEDULE 40) PIPE

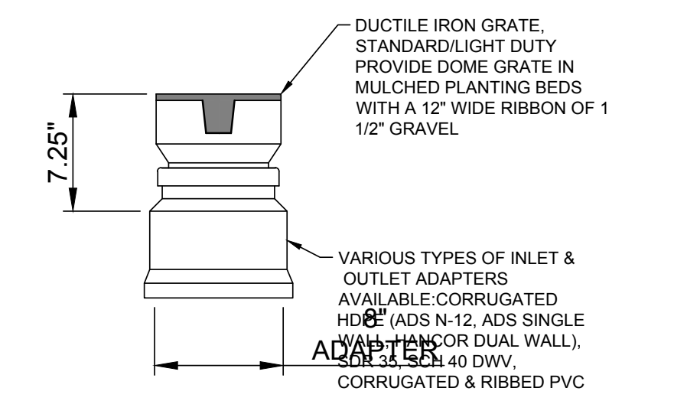
DUCTILE IRON GRATE, STANDARD/LIGHT DUTY PROVIDE DOME GRATE IN MULCHED PLANTING BEDS WITH A 12" WIDE RIBBON OF 1 1/2" GRAVEL
7.25"
VARIOUS TYPES OF INLET & OUTLET ADAPTERS AVAILABLE:CORRUGATED HDPE (ADS N-12, ADS SINGLE WALL, HANCOR DUAL WALL), SDR 35, SCH 40 DWV, CORRUGATED & RIBBED PVC
8"
ADAPTER

SURFACE DRAINAGE GRATE DETAIL (SDG)
NOT TO SCALE

NOTES:
1. GRATES/SOLID COVERS SHALL BE DUCTILE IRON PER ASTM A536 GRADE 70-50-05.
2. DRAINAGE CONNECTION STUB JOINT TIGHTNESS SHALL CONFORM TO ASTM D3212 FOR CORRUGATED HDPE (ADS & HANCOR DUAL WALL) & SDR 35 PVC.
3. DIMENSIONS ARE FOR REFERENCE ONLY ACTUAL DIMENSIONS MAY VARY.
4. INLET DRAINS AS MANUFACTURED BY NYLOPLAST.

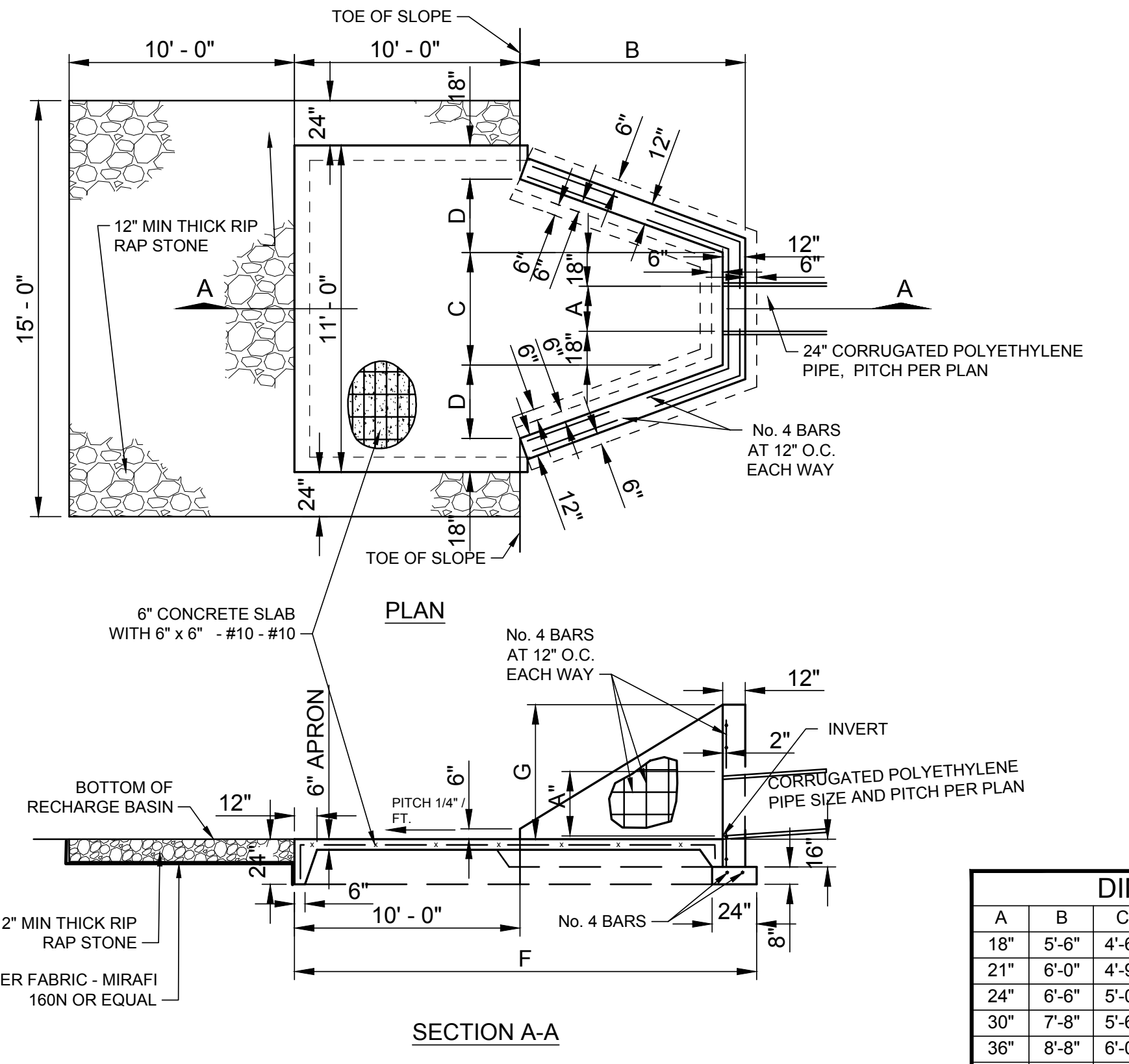
TOE OF SLOPE
10' - 0"
10' - 0"
B
18"
24"
15' - 0"
12" MIN THICK RIP RAP STONE
A
11' - 0"
D
C
D
6"
12"
6"
18"
A
6"
6"
6"
18"
12"
6"
A
24" CORRUGATED POLYETHYLENE PIPE, PITCH PER PLAN
No. 4 BARS AT 12" O.C. EACH WAY
9"
12"
24"
18"
TOE OF SLOPE
PLAN
6" CONCRETE SLAB WITH 6" x 6" - #10 - #10
No. 4 BARS AT 12" O.C. EACH WAY
12"
INVERT
2"
CORRUGATED POLYETHYLENE PIPE SIZE AND PITCH PER PLAN
6" APRON
G
A"
6"
PITCH 1/4" / FT.
BOTTOM OF RECHARGE BASIN
12"
24"
16"
6"
10' - 0"
No. 4 BARS
24"
8"
F
12" MIN THICK RIP RAP STONE
FILTER FABRIC - MIRAFI 160N OR EQUAL
SECTION A-A

DIMENSIONS						
A	B	C	D	E	F	G
18"	5'-6"	4'-6"	2'-9"	13'-0"	17'-0"	4'-0"
21"	6'-0"	4'-9"	3'-0"	13'-9"	17'-6"	4'-3"
24"	6'-6"	5'-0"	3'-3"	14'-6"	18'-0"	4'-6"
30"	7'-8"	5'-6"	3'-10"	16'-2"	19'-2"	5'-1"
36"	8'-8"	6'-0"	4'-4"	17'-8"	20'-2"	5'-7"
42"	9'-8"	6'-6"	4'-10"	19'-2"	21'-2"	6'-5"
48"	10'-10"	7'-0"	5'-5"	20'-10"	22'-4"	7'-3"

RECHARGE BASIN HEADWALL DETAIL
NOT TO SCALE

NOTES:
1. CONCRETE TO BE CLASS A - AIR ENTRAINED
2. ALL DRAINAGE PIPES MUST BE PROVIDED WITH A MINIMUM COVER OF 2' - 0".
3. ALL CONCRETE TO BE 4,000 PSI. AT 28 DAYS.
4. WELDED WIRE MESH - ASTM A82 AND A185,- FLAT SHEETS.
5. REBAR - ASTM A615, GRADE 60
6. CONCRETE SLAB SHALL BE STEEL TROWEL FINISHED.
7. TO BE CONSTRUCTED MONOLITHICALLY EXCEPT AS NOTED OR APPROVED.

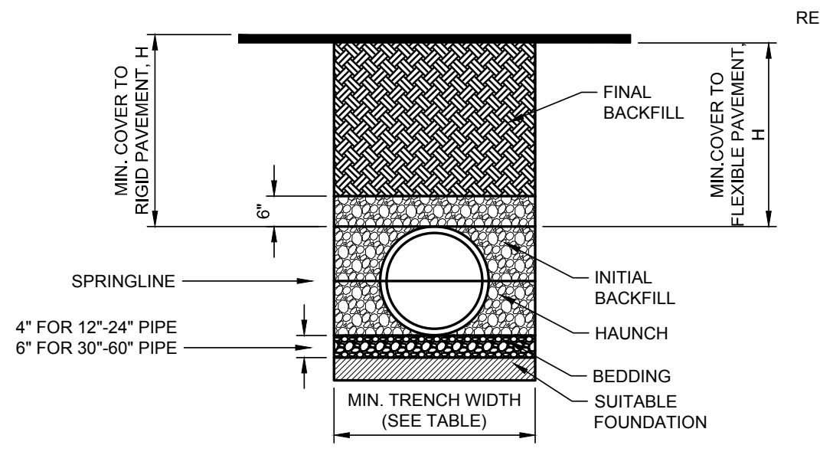
MIN. COVER TO RIGID PAVEMENT, H
FINAL BACKFILL
MIN.COVER TO FLEXIBLE PAVEMENT, H
6"
SPRINGLINE
INITIAL BACKFILL
HAUNCH
4" FOR 12"-24" PIPE
6" FOR 30"-60" PIPE
BEDDING
SUITABLE FOUNDATION
MIN. TRENCH WIDTH (SEE TABLE)

RECOMMENDED MINIMUM TRENCH WIDTHS

PIPE DIAM.	MIN. TRENCH WIDTH
4"	21"
6"	23"
8"	26"
10"	28"
12"	30"
15"	34"
18"	39"
24"	48"
30"	56"
36"	64"
42"	72"
48"	80"
54"	88"
60"	96"

CORRUGATED POLYETHYLENE PIPE TRENCH AND BEDDING DETAIL
NOT TO SCALE

NOTES:
1. ALL PIPE SYSTEMS SHALL BE INSTALLED IN ACCORDANCE WITH ASTM D2321, "STANDARD PRACTICE FOR UNDERGROUND INSTALLATION OF THERMOPLASTIC PIPE FOR SEWERS AND OTHER GRAVITY FLOW APPLICATIONS", LATEST EDITION.
2. MEASURES SHOULD BE TAKEN TO PREVENT MIGRATION OF NATIVE FINES INTO BACKFILL MATERIAL WHEN REQUIRED.
3. FOUNDATION: WHERE THE TRENCH BOTTOM IS UNSUITABLE, THE CONTRACTOR SHALL EXCAVATE TO A DEPTH REQUIRED BY THE ENGINEER AND REPLACE WITH SUITABLE MATERIAL AS SPECIFIED BY THE ENGINEER. AS AN ALTERNATIVE AND AT THE DISCRETION OF THE DESIGN ENGINEER, THE TRENCH BOTTOM MAY BE STABILIZED USING A GEOTEXTILE MATERIAL.
4. BEDDING: SUITABLE MATERIAL SHALL BE CLASS I, II OR III. THE CONTRACTOR SHALL PROVIDE DOCUMENTATION FOR MATERIAL SPECIFICATION TO ENGINEER. UNLESS OTHERWISE NOTED BY THE ENGINEER, MINIMUM BEDDING THICKNESS SHALL BE 4" FOR 4"-24"; 6" FOR 30"-60".
5. INITIAL BACKFILL: SUITABLE MATERIAL SHALL BE CLASS I, II OR III IN THE PIPE ZONE EXTENDING NOT LESS THAN 6" ABOVE CROWN OF PIPE. THE CONTRACTOR SHALL PROVIDE DOCUMENTATION FOR MATERIAL SPECIFICATION TO ENGINEER. MATERIAL SHALL BE INSTALLED AS REQUIRED IN ASTM D2321, LATEST EDITION.
6. MINIMUM COVER: MINIMUM COVER, H, IN NON-TRAFFIC APPLICATIONS (GRASS OR LANDSCAPE AREAS) IS 12" FROM THE TOP OF PIPE TO GROUND SURFACE. ADDITIONAL COVER MAY BE REQUIRED TO PREVENT FLOATATION. FOR TRAFFIC APPLICATIONS, MINIMUM COVER, H, IS 12" UP TO 48" DIAMETER PIPE AND 24" OF COVER FOR 54"-60" DIAMETER PIPE, MEASURED FROM TOP OF PIPE TO BOTTOM OF FLEXIBLE PAVEMENT OR TO TOP OF RIGID PAVEMENT.

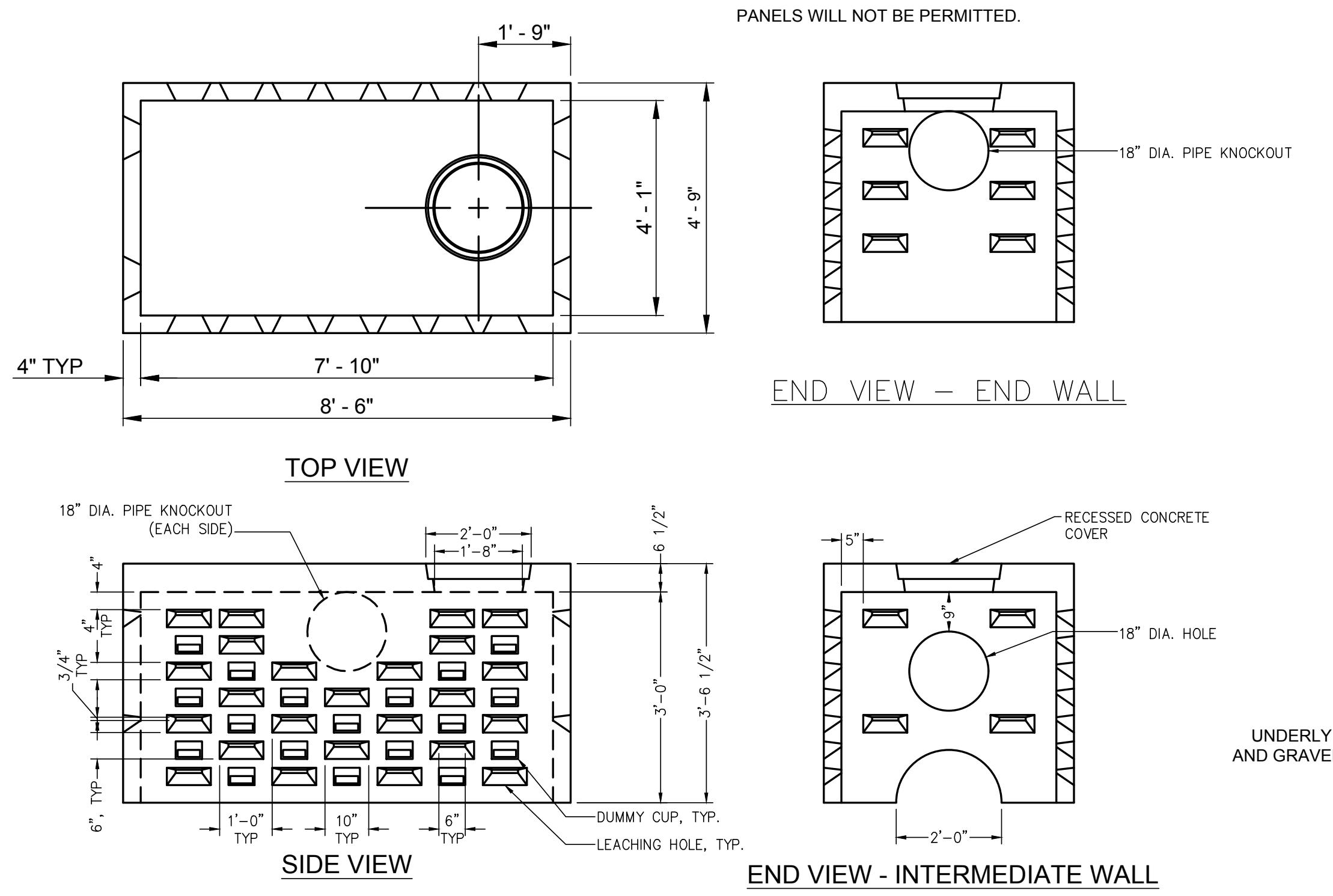
1' - 9"
4' - 1"
4' - 9"
4" TYP
7' - 10"
8' - 6"
TOP VIEW
18" DIA. PIPE KNOCKOUT
END VIEW – END WALL
18" DIA. PIPE KNOCKOUT (EACH SIDE)
2'-0"
1'-8"
6 1/2"
4"
4" TYP
3/4" TYP
6", TYP
3'-0"
3'-6 1/2"
1'-0" TYP
10" TYP
6" TYP
DUMMY CUP, TYP.
LEACHING HOLE, TYP.
SIDE VIEW
5"
RECESSED CONCRETE COVER
9"
18" DIA. HOLE
2'-0"
END VIEW - INTERMEDIATE WALL

LEACHING GALLEY DATA

INTERNAL WALL HGT.	DRAIN WALL AREA (SF)	INTERNAL VOLUME		APPROX. DRAIN OPENINGS			WEIGHT (Lb.)
		CF	GAL.	TOTAL	SIZE	ANGLE	
3'-0"	51.0	96	718	34	3/4" X 6"	14 DEG.	6,485

LEACHING GALLEY DETAIL
NOT TO SCALE

NOTES:
1. CONCRETE 4,000 PSI @ 28 DAYS
2. REBAR TO BE ASTM A-615 GRADE 60
3. WELDED WIRE FABRIC ASTM A-185
4. DESIGNED FOR AASHTO HS-20 LOADING
5. TOP SLAB AND WALL ARE MONOLITHIC

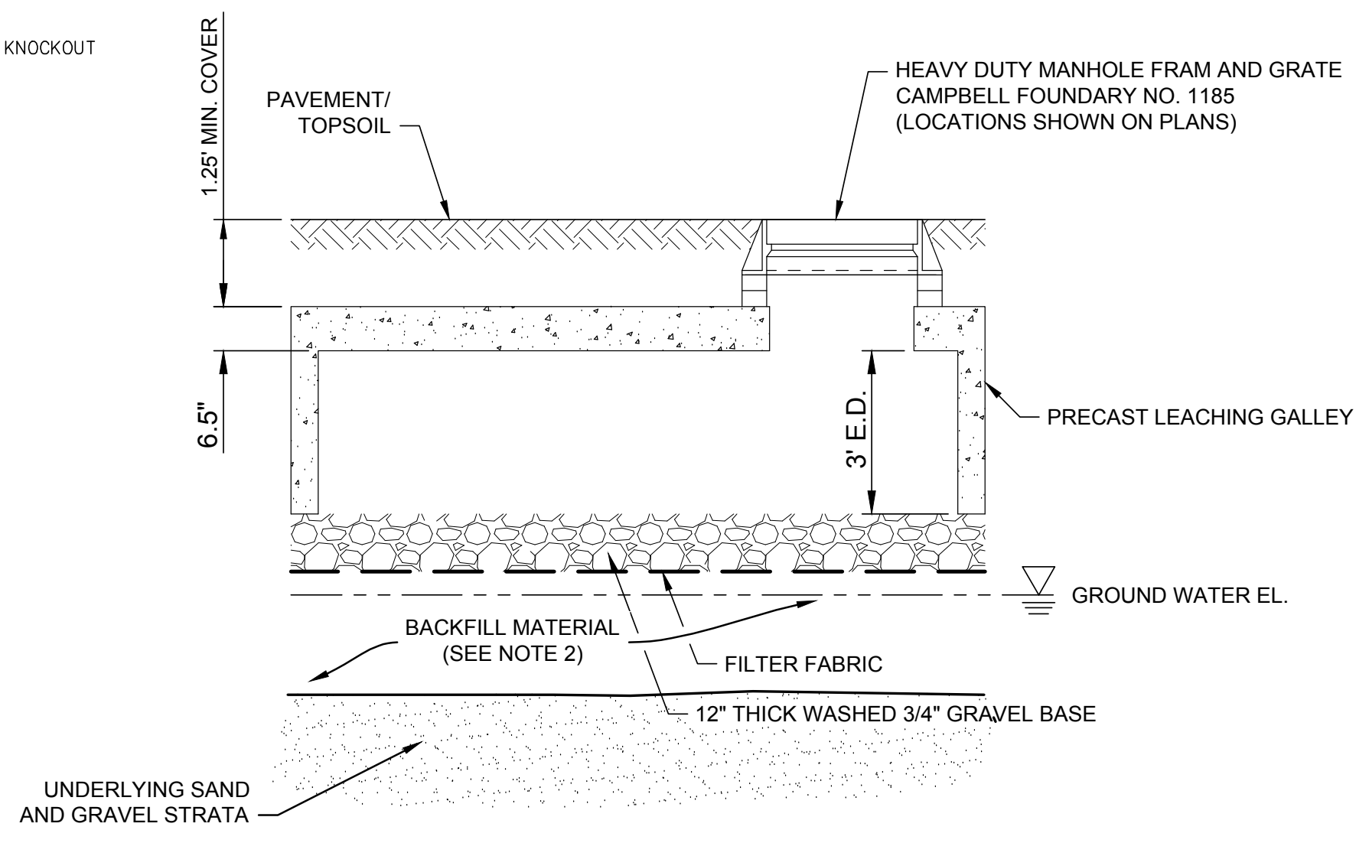
1.25' MIN. COVER
PAVEMENT/ TOPSOIL
HEAVY DUTY MANHOLE FRAM AND GRATE CAMPBELL FOUNDARY NO. 1185 (LOCATIONS SHOWN ON PLANS)
6.5"
3' E.D.
PRECAST LEACHING GALLEY
GROUND WATER EL.
BACKFILL MATERIAL (SEE NOTE 2)
FILTER FABRIC
12" THICK WASHED 3/4" GRAVEL BASE
UNDERLYING SAND AND GRAVEL STRATA

TYPICAL LEACHING GALLEY SECTION DETAIL
NOT TO SCALE

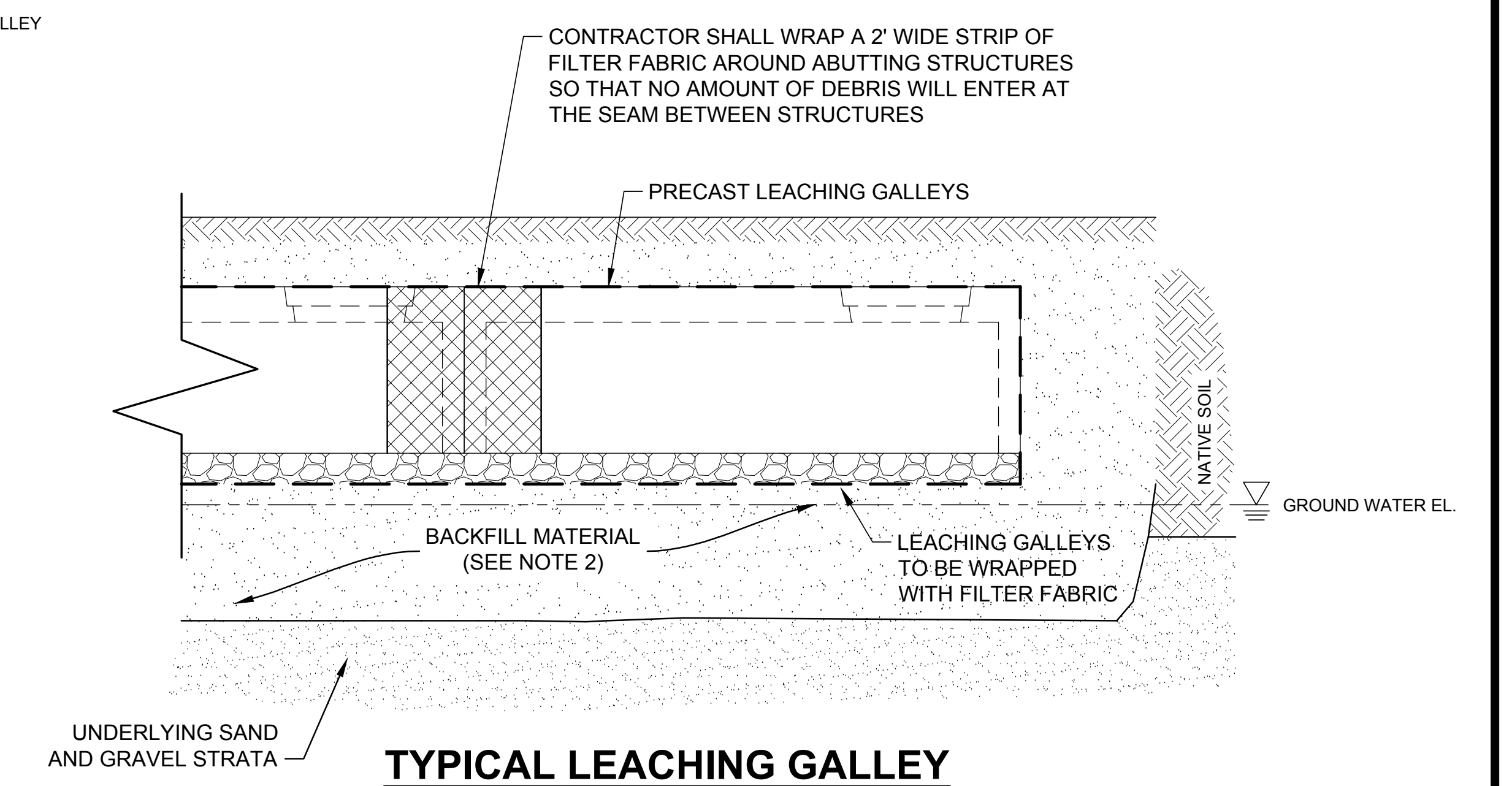
CONTRACTOR SHALL WRAP A 2' WIDE STRIP OF FILTER FABRIC AROUND ABUTTING STRUCTURES SO THAT NO AMOUNT OF DEBRIS WILL ENTER AT THE SEAM BETWEEN STRUCTURES
PRECAST LEACHING GALLEYS
NATIVE SOIL
GROUND WATER EL.
BACKFILL MATERIAL (SEE NOTE 2)
LEACHING GALLEYS TO BE WRAPPED WITH FILTER FABRIC
UNDERLYING SAND AND GRAVEL STRATA

TYPICAL LEACHING GALLEY INSTALLATION DETAIL
NOT TO SCALE

LEACHING GALLEY NOTES:
1. UNSUITABLE MATERIAL SHALL BE REMOVED UNDER LEACHING POOL UNTIL 6' MIN. PENETRATION INTO VIRGIN STRATA OF SAND AND GRAVEL.
2. BACKFILL MATERIAL TO BE CLEAN SAND AND GRAVEL CONTAINING LESS THAN 15% FINE SAND, SILT AND CLAY. MATERIAL TO BE IMPORTED IF NATIVE MATERIALS ARE DETERMINED TO BE UNSUITABLE BY THE ENGINEER.
3. ALL CONCRETE TO BE 4,000 P.S.I., AT 28 DAYS, AND AIR ENTRAINED.
4. WELDED WIRE FABRIC SHALL MEET ASTM A82 AND A185.
5. REBAR SHALL MEET ASTM A615, GRAE 60.
6. STRUCTURE SHALL BE DESIGNED FOR AASHTO H-20 LOADING.

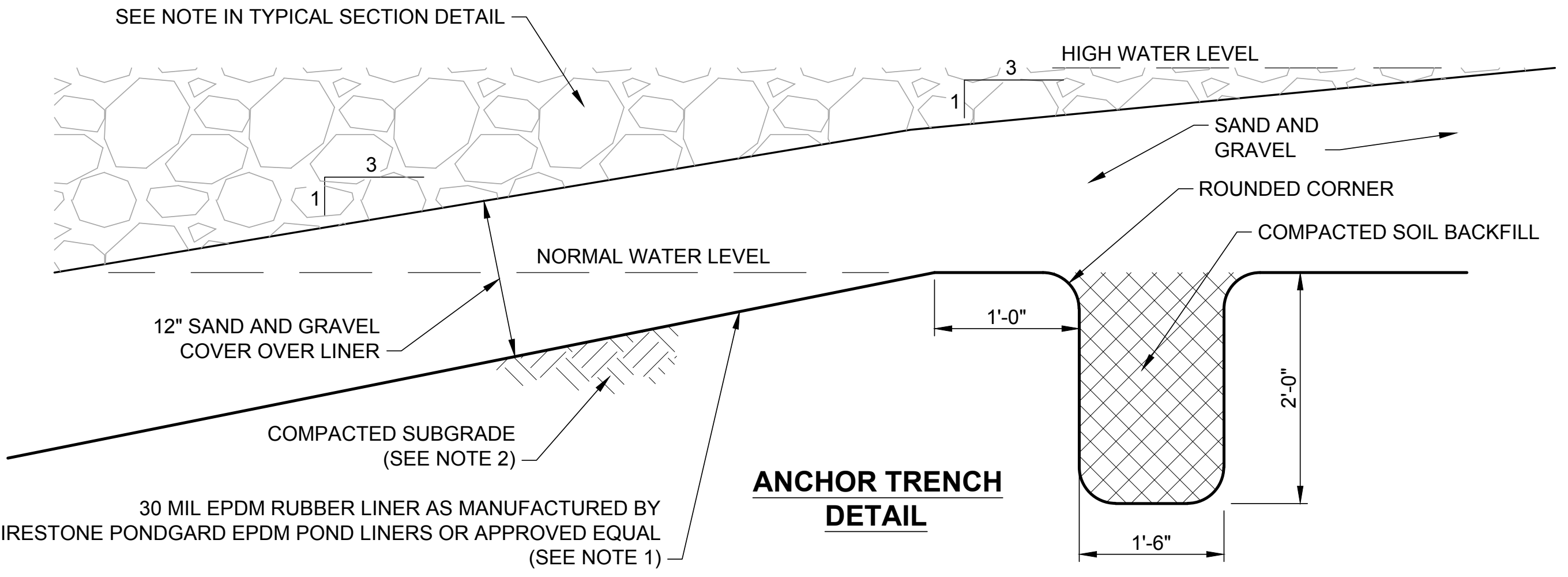
12" MIN. RIP-RAP STONE- SEE NOTE IN TYPICAL SECTION DETAIL
HIGH WATER LEVEL
1
3
SAND AND GRAVEL
1
3
ROUNDED CORNER
COMPACTED SOIL BACKFILL
NORMAL WATER LEVEL
12" SAND AND GRAVEL COVER OVER LINER
1'-0"
2'-0"
COMPACTED SUBGRADE (SEE NOTE 2)
30 MIL EPDM RUBBER LINER AS MANUFACTURED BY FIRESTONE PONDGARD EPDM POND LINERS OR APPROVED EQUAL (SEE NOTE 1)
1'-6"

ANCHOR TRENCH DETAIL

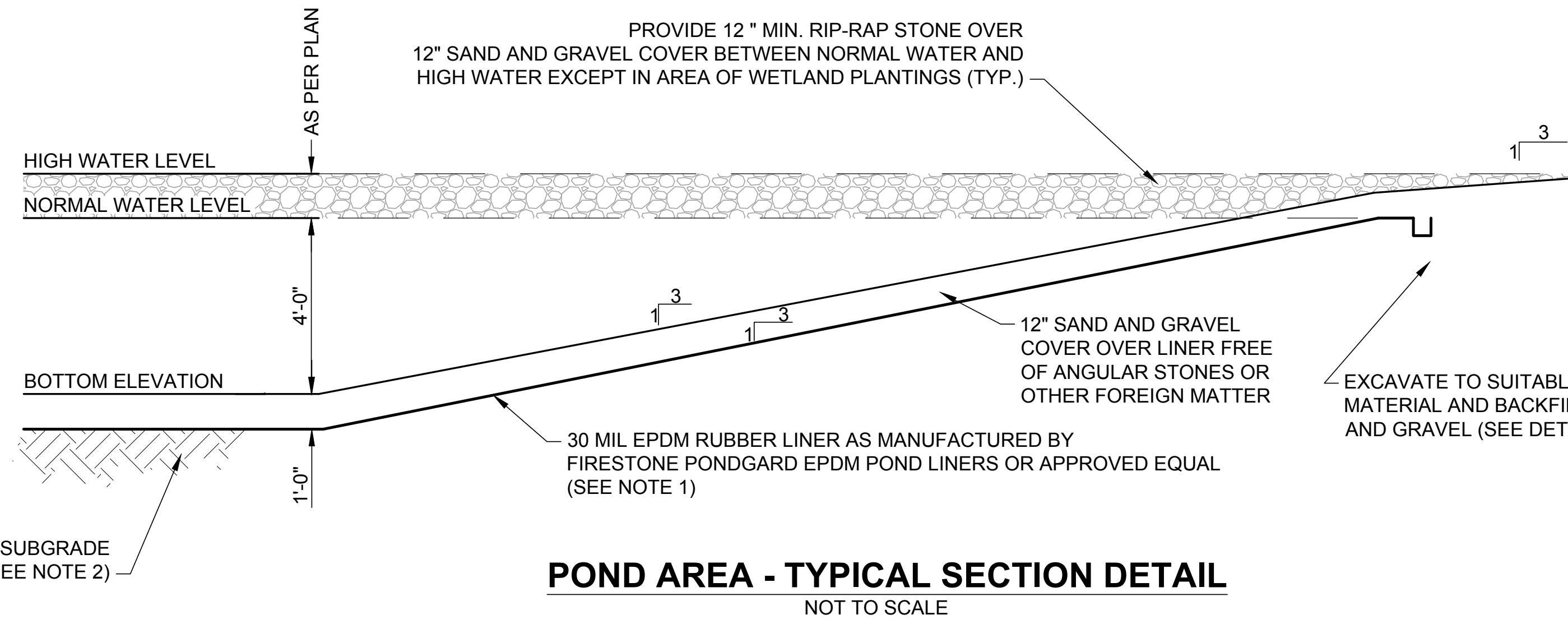
PROVIDE 12 " MIN. RIP-RAP STONE OVER 12" SAND AND GRAVEL COVER BETWEEN NORMAL WATER AND HIGH WATER EXCEPT IN AREA OF WETLAND PLANTINGS (TYP.)
AS PER PLAN
1
3
HIGH WATER LEVEL
NORMAL WATER LEVEL
4'-0"
1
3
1
3
12" SAND AND GRAVEL COVER OVER LINER FREE OF ANGULAR STONES OR OTHER FOREIGN MATTER
EXCAVATE TO SUITABLE LEACHING MATERIAL AND BACKFILL WITH SAND AND GRAVEL (SEE DETAIL ABOVE)
BOTTOM ELEVATION
30 MIL EPDM RUBBER LINER AS MANUFACTURED BY FIRESTONE PONDGARD EPDM POND LINERS OR APPROVED EQUAL (SEE NOTE 1)
1'-0"
COMPACTED SUBGRADE (SEE NOTE 2)

POND AREA - TYPICAL SECTION DETAIL
NOT TO SCALE

NOTES:
1. THE LINER SHALL BE INSTALLED IN ACCORDANCE WITH THE MANUFACTURER'S REQUIREMENTS.
2. THE COMPACTED SUBGRADE SHALL BE SMOOTH, FIRM, UNYIELDING AND FREE OF VEGETATION, CONSTRUCTION DEBRIS, STICKS, SHARP ROCKS, VOID SPACES, ICE, ABRUPT ELEVATION CHANGES, STANDING WATER, CRACKS LARGER THAN 1/4" IN WIDTH AND ANY OTHER FOREIGN MATTER THAT COULD CONTACT THE LINER.

IT IS A VIOLATION OF NEW YORK STATE EDUCATION LAW ARTICLE 145, PROFESSIONAL ENGINEERING AND LAND SURVEYING, SECTION 7209 FOR ANY PERSON, UNLESS HE IS ACTING UNDER THE DIRECTION OF A LICENSED PROFESSIONAL ENGINEER OR LAND SURVEYOR, TO ALTER AN ITEM IN ANY WAY. IF AN ITEM BEARING THE SEAL OF AN ENGINEER OR LAND SURVEYOR IS ALTERED, THE ALTERING ENGINEER OR LAND SURVEYOR SHALL AFFIX TO THE ITEM HIS SEAL AND NOTATION "ALTERED BY" FOLLOWED BY HIS SIGNATURE AND THE DATE OF SUCH ALTERATION, AND SPECIFIC DESCRIPTION OF THE ALTERATION.

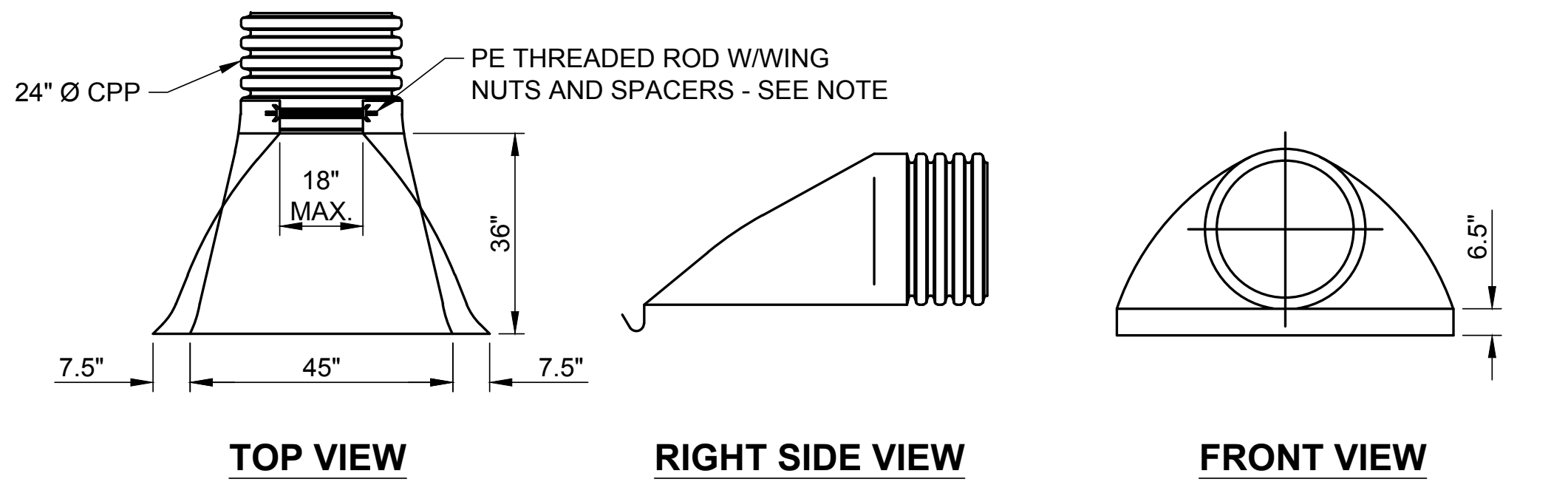
24" Ø CPP
PE THREADED ROD W/WING NUTS AND SPACERS - SEE NOTE
18" MAX.
36"
7.5"
45"
7.5"
6.5"
TOP VIEW
RIGHT SIDE VIEW
FRONT VIEW

FLARED END SECTION DETAIL
FES
NOT TO SCALE

NOTE:
END SECTIONS REQUIRE TWO (2) THREADED RODS FOR ASSEMBLY.

FOR TOWN USE

No.	REVISION	DATE

OWNER
I.H.C.C., INC. AND
ROBERG REVOCABLE TRUST
21 BREEZE HILL ROAD
NORTHPORT, NY, 11768
(631) 261 - 5700

APPLICANT:
THE PRESERVE AT INDIAN HILLS
1 RABRO DRIVE, SUITE 100
HAUPPAUGE, N.Y. 11788
(631) 351 - 4000

DRAINAGE DETAILS
FOR
THE PRESERVE AT INDIAN HILLS
SITUATED AT
NORTHPORT
TOWN OF HUNTINGTON, SUFFOLK COUNTY, NEW YORK
S.C.T.M.: DISTRICT: 0400, SECT. 014, BLK. 04, LOTS 1 AND 2
DISTRICT 0400, SECT. 015, BLK. 01, LOTS 3.1, 3.2, 11, 12, 16, 19 AND P/O 22

THOMAS CHARLES DIXON

NELSON + POPE
engineers • architects • surveyors
70 Maxess Road, Melville, NY 11747 • 631.427.5665 • nelsonpope.com

DRAWN BY: GEO	CADD No.: 86047 CSP 2021 DETAILS.DWG	SCALE: NONE	DRAWING NO.: C - 501
CHECKED BY: JM	FILE NO.: 400-014		
DATE: OCTOBER, 2021	PROJECT NO.: 86047		SHEET NO.: 35 OF 44

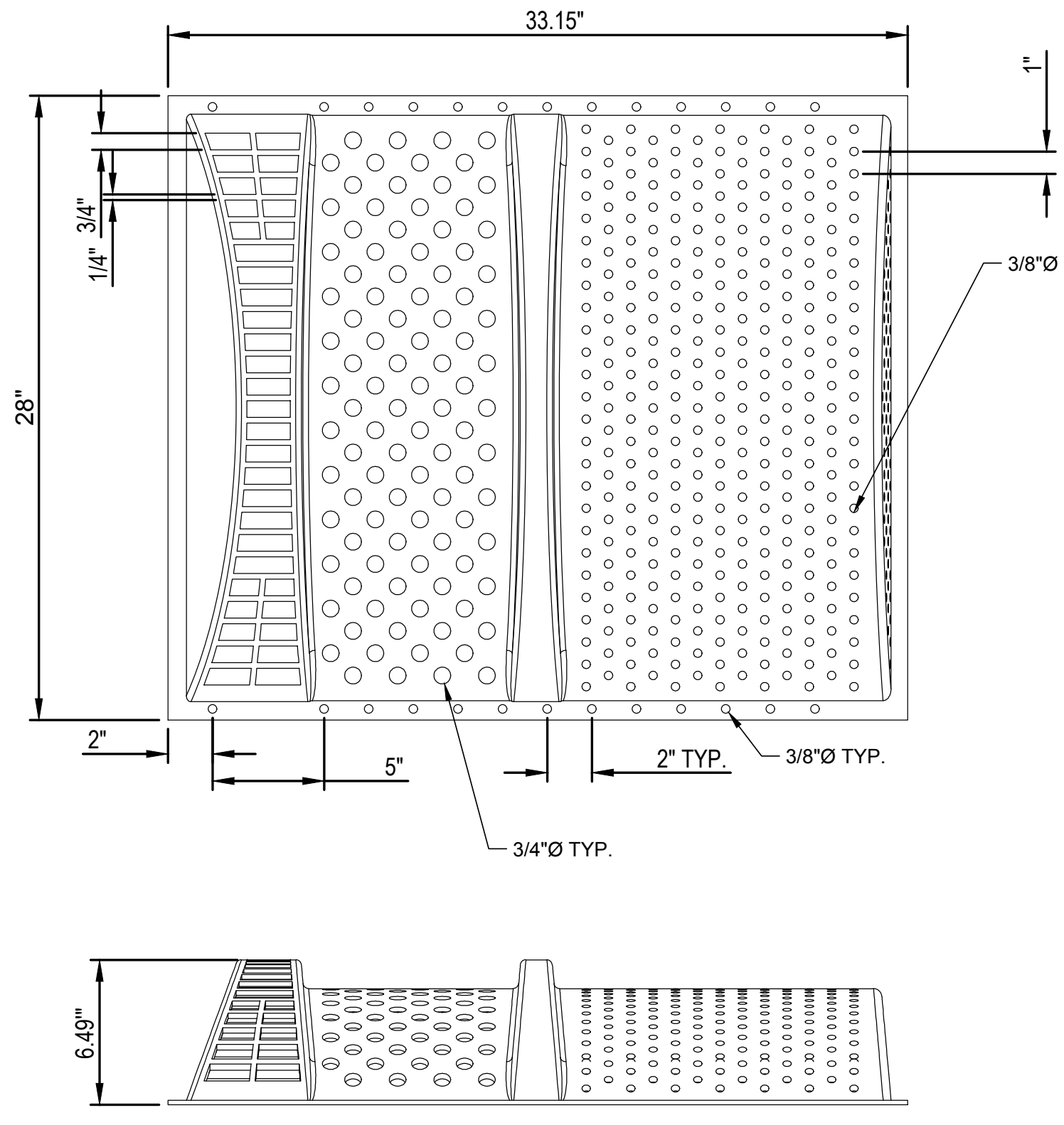
33.15"
28"
1"
3/4"
1/4"
2"
5"
2" TYP.
3/8"Ø TYP.
3/8"Ø TYP.
3/8"Ø TYP.
3/4"Ø TYP.
1"
6.49"

TRASH RACK DETAIL

NOT TO SCALE

NOTES:

1. TRASH RACK TO BE TRASHGUARD PLUS 28" (TGRD28X30) MANUFACTURED BY ACF ENVIRONMENTAL OR APPROVED EQUIVALENT.

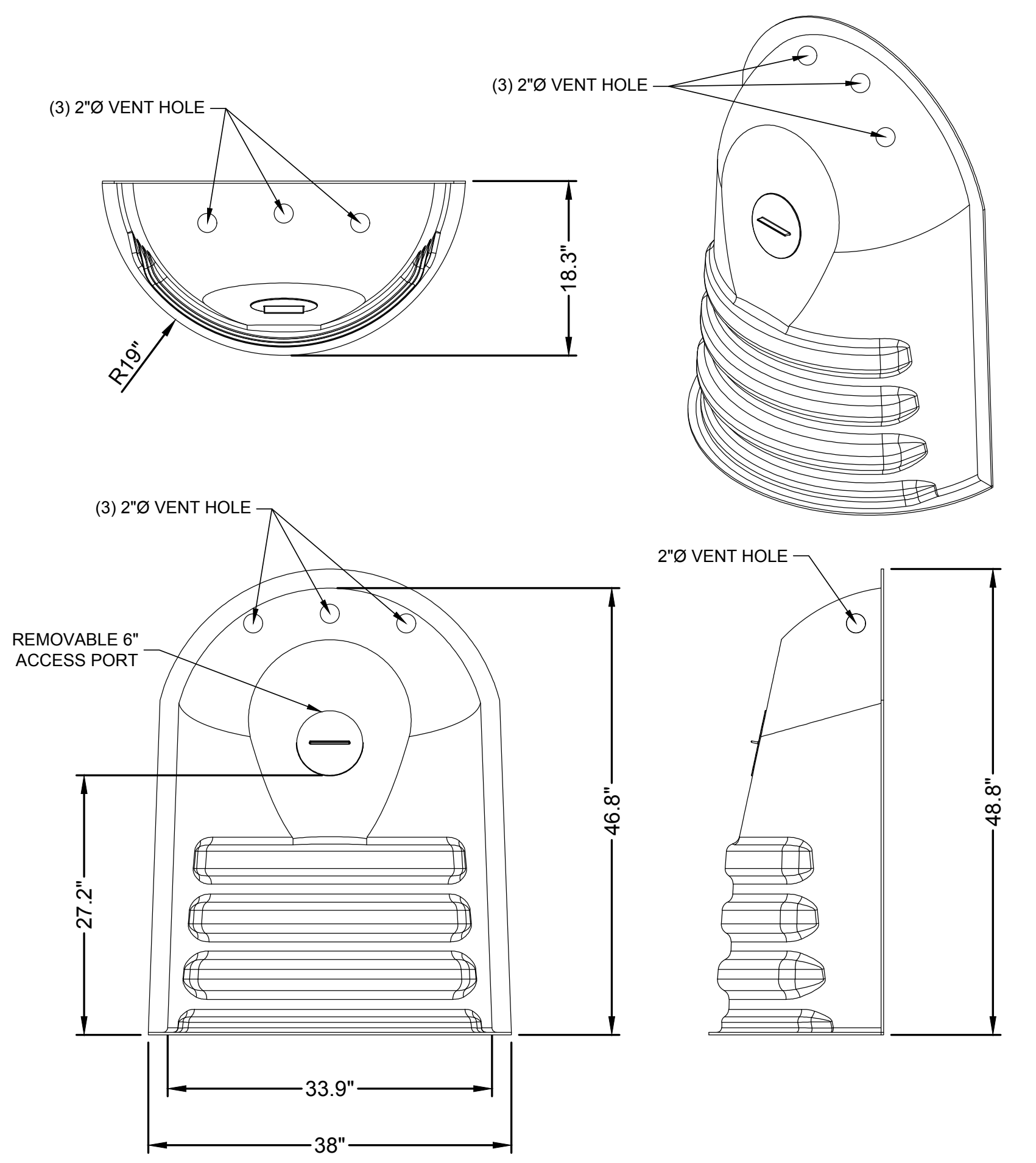
(3) 2"Ø VENT HOLE
R19"
18.3"
(3) 2"Ø VENT HOLE
(3) 2"Ø VENT HOLE
REMOVABLE 6"
ACCESS PORT
2"Ø VENT HOLE
27.2"
46.8"
48.8"
33.9"
38"

OUTLET HOOD DETAIL

NOT TO SCALE

NOTES:

1. OUTLET HOOD TO BE NYLOPLAST ENVIROHOOD PART NUMBER 7004-110-110 MANUFACTURED BY ADS OR APPROVED EQUIVALENT.

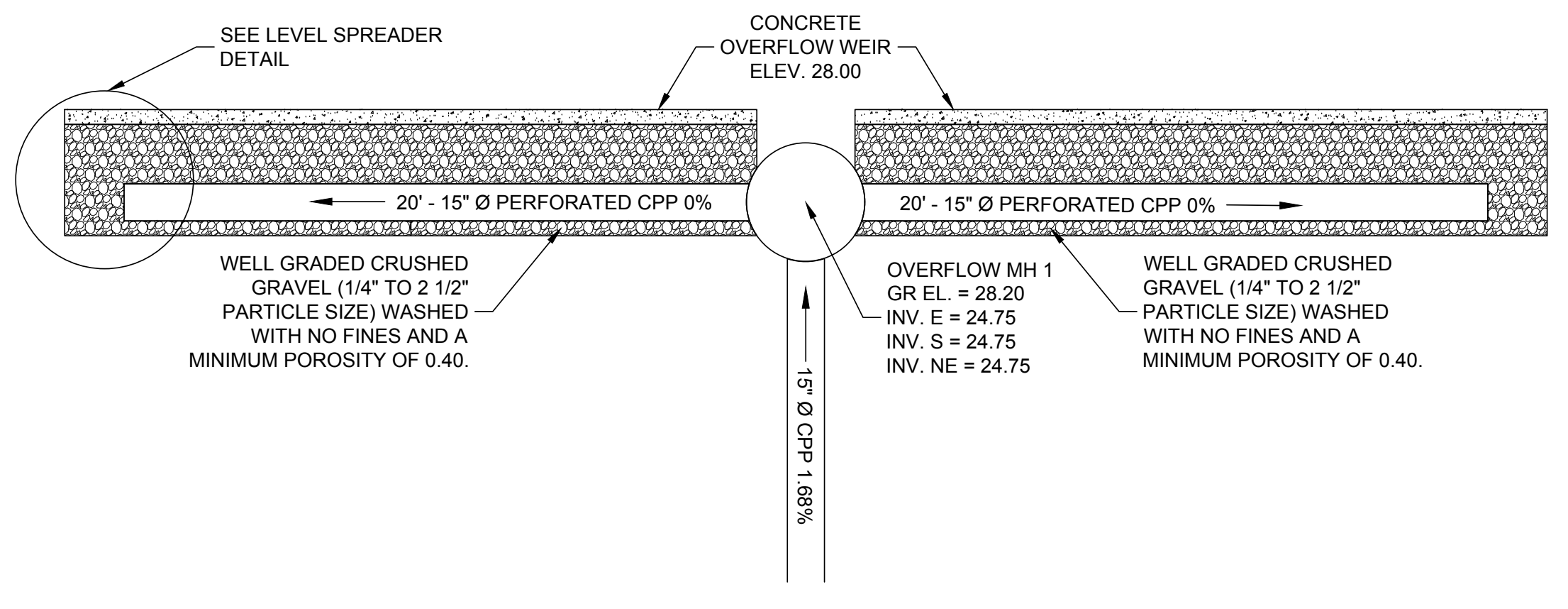
SEE LEVEL SPREADER
DETAIL
CONCRETE
OVERFLOW WEIR
ELEV. 28.00
20' - 15" Ø PERFORATED CPP 0%
20' - 15" Ø PERFORATED CPP 0%
WELL GRADED CRUSHED
GRAVEL (1/4" TO 2 1/2"
PARTICLE SIZE) WASHED
WITH NO FINES AND A
MINIMUM POROSITY OF 0.40.
OVERFLOW MH 1
GR EL. = 28.20
INV. E = 24.75
INV. S = 24.75
INV. NE = 24.75
WELL GRADED CRUSHED
GRAVEL (1/4" TO 2 1/2"
PARTICLE SIZE) WASHED
WITH NO FINES AND A
MINIMUM POROSITY OF 0.40.
15" Ø CPP 1.68%

LEVEL SPREADER PLAN VIEW

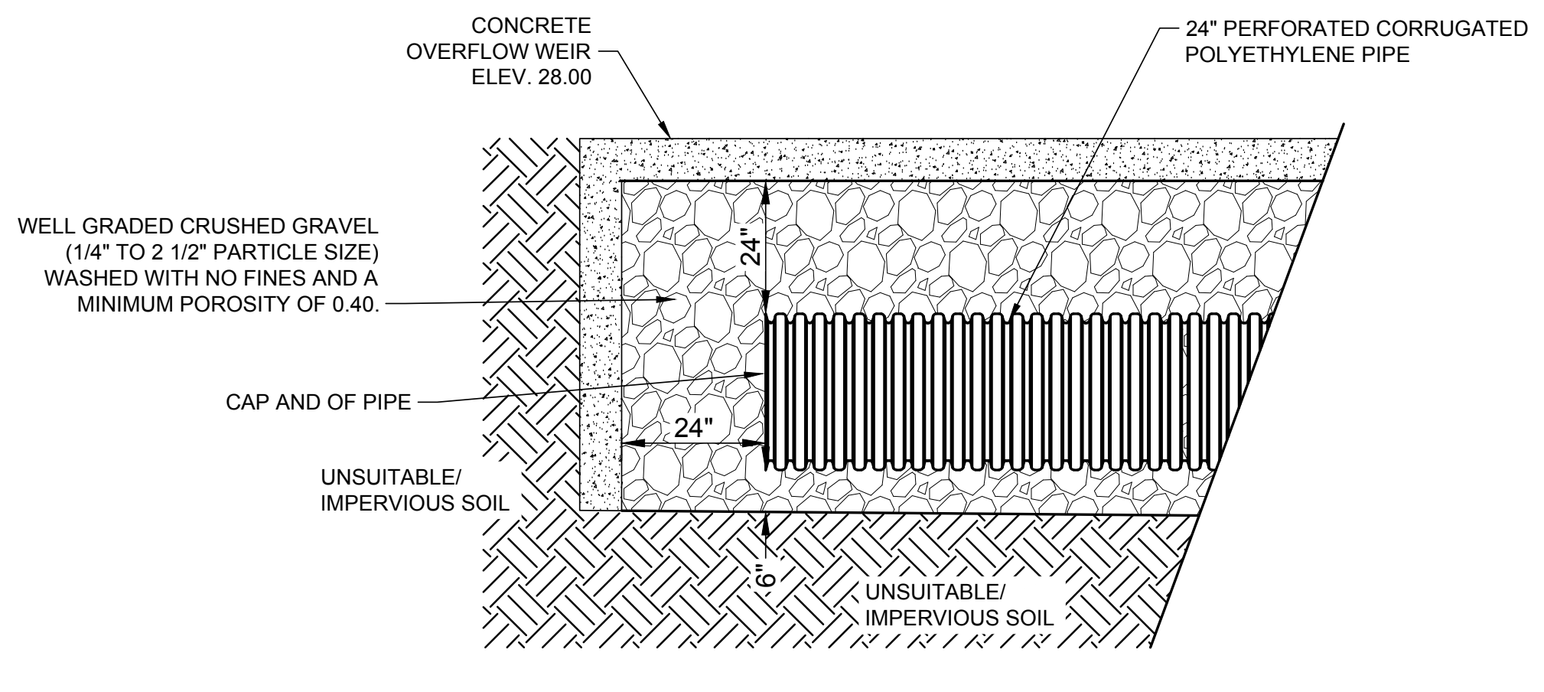
CONCRETE
OVERFLOW WEIR
ELEV. 28.00
24" PERFORATED CORRUGATED
POLYETHYLENE PIPE
WELL GRADED CRUSHED GRAVEL
(1/4" TO 2 1/2" PARTICLE SIZE)
WASHED WITH NO FINES AND A
MINIMUM POROSITY OF 0.40.
CAP AND OF PIPE
UNSUITABLE/
IMPERVIOUS SOIL
24"
24"
6"
UNSUITABLE/
IMPERVIOUS SOIL

LEVEL SPREADER DETAIL

NOT TO SCALE

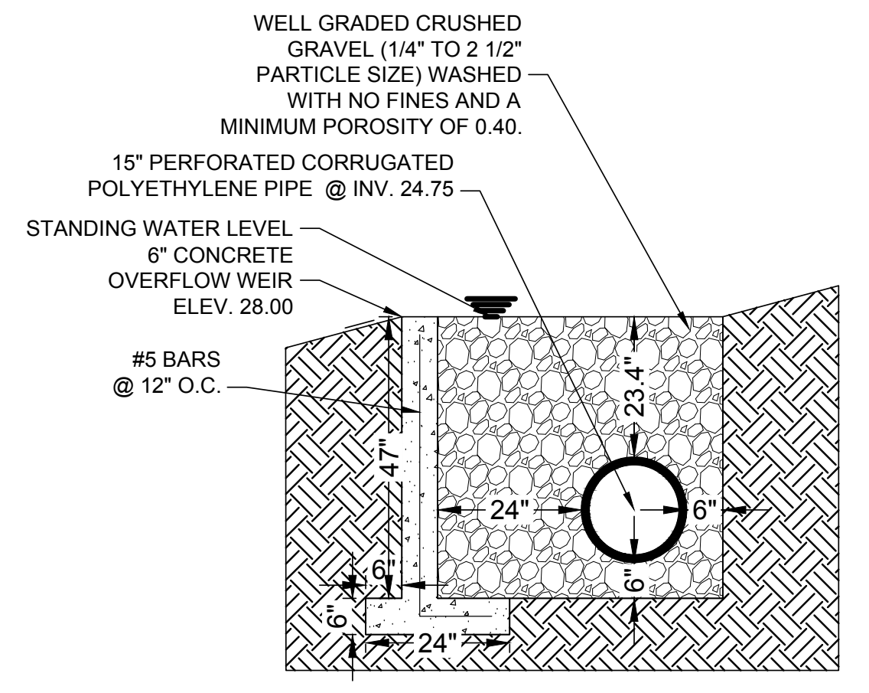
WELL GRADED CRUSHED
GRAVEL (1/4" TO 2 1/2"
PARTICLE SIZE) WASHED
WITH NO FINES AND A
MINIMUM POROSITY OF 0.40.
15" PERFORATED CORRUGATED
POLYETHYLENE PIPE @ INV. 24.75
STANDING WATER LEVEL
6" CONCRETE
OVERFLOW WEIR
ELEV. 28.00
#5 BARS
@ 12" O.C.
23.4"
47"
24"
6"
6"
6"
6"
24"

LEVEL SPREADER SECTION VIEW

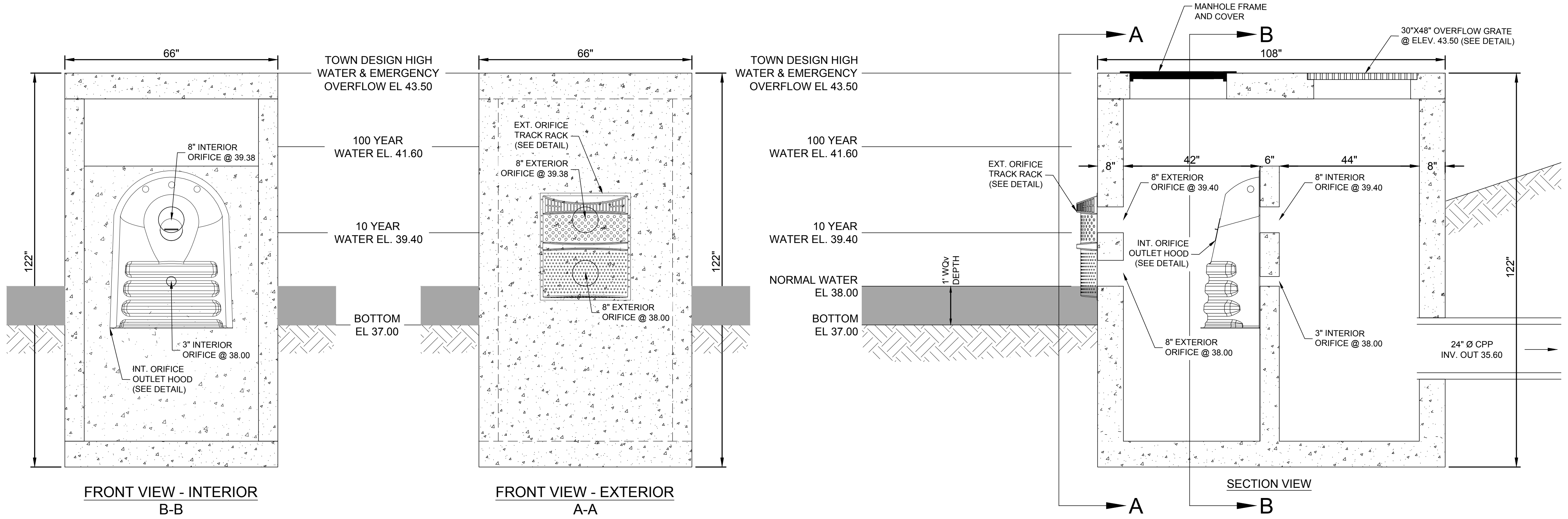
66"
TOWN DESIGN HIGH
WATER & EMERGENCY
OVERFLOW EL 43.50
100 YEAR
WATER EL. 41.60
10 YEAR
WATER EL. 39.40
BOTTOM
EL 37.00
122"
8" INTERIOR
ORIFICE @ 39.38
3" INTERIOR
ORIFICE @ 38.00
INT. ORIFICE
OUTLET HOOD
(SEE DETAIL)
66"
EXT. ORIFICE
TRACK RACK
(SEE DETAIL)
8" EXTERIOR
ORIFICE @ 39.38
8" EXTERIOR
ORIFICE @ 38.00
122"
TOWN DESIGN HIGH
WATER & EMERGENCY
OVERFLOW EL 43.50
100 YEAR
WATER EL. 41.60
10 YEAR
WATER EL. 39.40
NORMAL WATER
EL 38.00
BOTTOM
EL 37.00
1' WQv
DEPTH
30" LIGHT DUTY
MANHOLE FRAME
AND COVER
A
B
30"X48" OVERFLOW GRATE
@ ELEV. 43.50 (SEE DETAIL)
108"
EXT. ORIFICE
TRACK RACK
(SEE DETAIL)
8"
42"
6"
44"
8"
8" EXTERIOR
ORIFICE @ 39.40
8" INTERIOR
ORIFICE @ 39.40
INT. ORIFICE
OUTLET HOOD
(SEE DETAIL)
8" EXTERIOR
ORIFICE @ 38.00
3" INTERIOR
ORIFICE @ 38.00
24" Ø CPP
INV. OUT 35.60
122"
A
B

FRONT VIEW - INTERIOR
B-B

FRONT VIEW - EXTERIOR
A-A

SECTION VIEW

OVERFLOW STRUCTURE 1

NOT TO SCALE

NOTES:

1. CONCRETE STRUCTURE TO BE PRECAST WITH MONOLITHIC BASE CONSTRUCTION
2. GRATE TO BE SECURED WITH REMOVABLE SADDLE CLIP SUPPLIED BY MANUFACTURER OR WITH REMOVABLE NON-CORROSIVE FASTENERS.
3. GRATE TO BE FLUSH WITH TOP OF STRUCTURE.
4. ALL HARDWARE AND FASTENERS TO BE STAINLESS STEEL.
5. TRASH RACK TO BE INSTALLED ON OUTER ORIFICES TO PREVENT DEBRIS FROM ENTERING OUTLET STRUCTURE.
6. OUTLET HOOD TO BE INSTALLED ON INTERIOR ORIFICES TO PREVENT DEBRIS FROM ENTERING DISCHARGE PIPE.

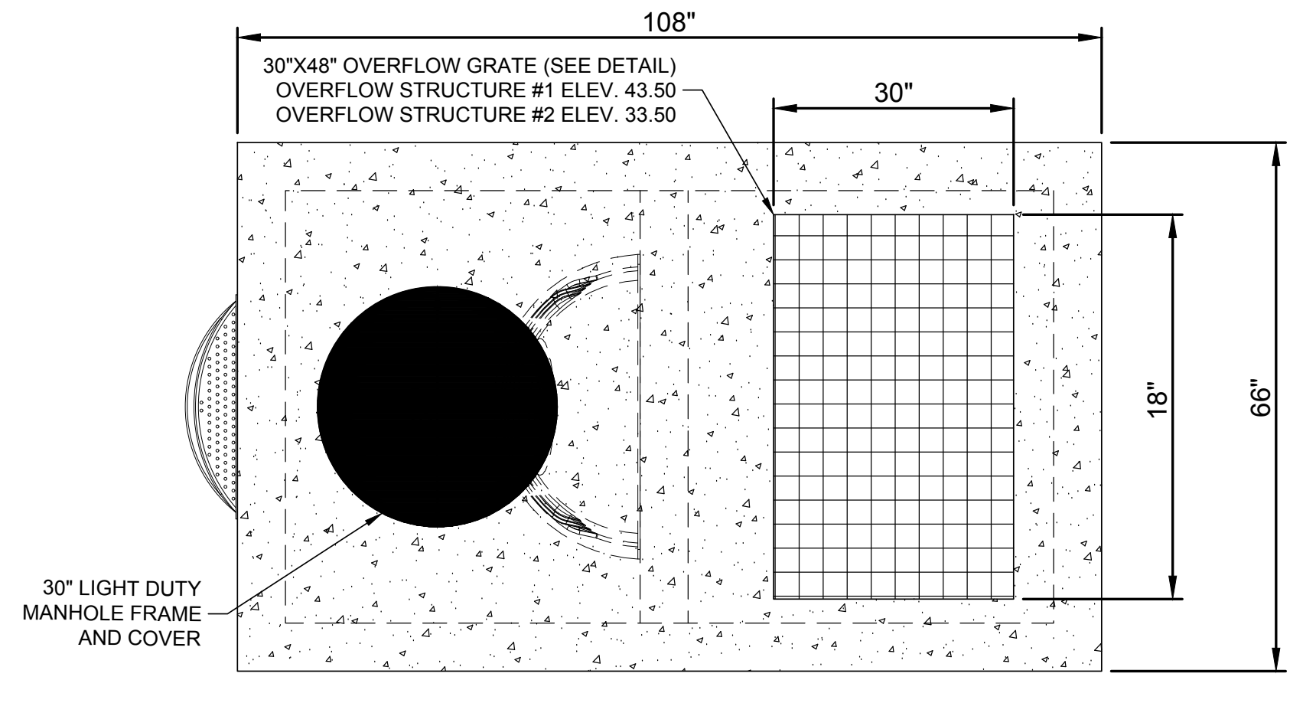
108"
30"X48" OVERFLOW GRATE (SEE DETAIL)
OVERFLOW STRUCTURE #1 ELEV. 43.50
OVERFLOW STRUCTURE #2 ELEV. 33.50
30"
18"
66"
30" LIGHT DUTY
MANHOLE FRAME
AND COVER

TOP VIEW - OVERFLOW STRUCTURES 1 & 2

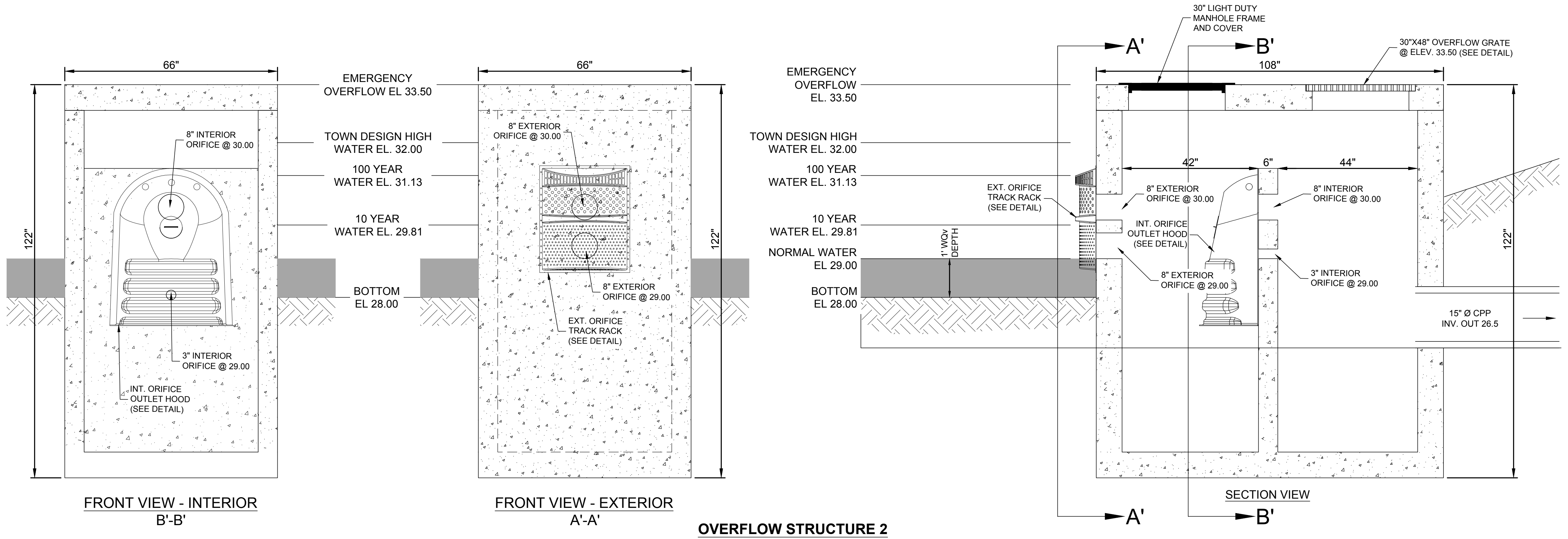
66"
EMERGENCY
OVERFLOW EL 33.50
TOWN DESIGN HIGH
WATER EL. 32.00
100 YEAR
WATER EL. 31.13
10 YEAR
WATER EL. 29.81
BOTTOM
EL 28.00
122"
8" INTERIOR
ORIFICE @ 30.00
3" INTERIOR
ORIFICE @ 29.00
INT. ORIFICE
OUTLET HOOD
(SEE DETAIL)
66"
8" EXTERIOR
ORIFICE @ 30.00
8" EXTERIOR
ORIFICE @ 29.00
EXT. ORIFICE
TRACK RACK
(SEE DETAIL)
122"
EMERGENCY
OVERFLOW
EL. 33.50
TOWN DESIGN HIGH
WATER EL. 32.00
100 YEAR
WATER EL. 31.13
10 YEAR
WATER EL. 29.81
NORMAL WATER
EL 29.00
BOTTOM
EL 28.00
1' WQv
DEPTH
30" LIGHT DUTY
MANHOLE FRAME
AND COVER
A'
B'
30"X48" OVERFLOW GRATE
@ ELEV. 33.50 (SEE DETAIL)
108"
EXT. ORIFICE
TRACK RACK
(SEE DETAIL)
42"
6"
44"
8" EXTERIOR
ORIFICE @ 30.00
8" INTERIOR
ORIFICE @ 30.00
INT. ORIFICE
OUTLET HOOD
(SEE DETAIL)
8" EXTERIOR
ORIFICE @ 29.00
3" INTERIOR
ORIFICE @ 29.00
15" Ø CPP
INV. OUT 26.5
122"
A'
B'

FRONT VIEW - INTERIOR
B'-B'

FRONT VIEW - EXTERIOR
A'-A'

SECTION VIEW

OVERFLOW STRUCTURE 2

NOT TO SCALE

NOTES:

1. CONCRETE STRUCTURE TO BE PRECAST WITH MONOLITHIC BASE CONSTRUCTION
2. GRATE TO BE SECURED WITH REMOVABLE SADDLE CLIP SUPPLIED BY MANUFACTURER OR WITH REMOVABLE NON-CORROSIVE FASTENERS.
3. GRATE TO BE FLUSH WITH TOP OF STRUCTURE.
4. ALL HARDWARE AND FASTENERS TO BE STAINLESS STEEL.
5. TRASH RACK TO BE INSTALLED ON OUTER ORIFICES TO PREVENT DEBRIS FROM ENTERING OUTLET STRUCTURE.
6. OUTLET HOOD TO BE INSTALLED ON INTERIOR ORIFICES TO PREVENT DEBRIS FROM ENTERING DISCHARGE PIPE.

MCNICHOLS BAR GRATING

CONSTRUCTION TYPE	SWAGE-LOCKED
SERIES TYPE & NAME	GAL-150
PRODUCT SPACING	19-S-4
PRIMARY MATERIAL	ALUMINIUM
BB SHAPE	RECTANGULAR
PRODUCT SURFACE	SMOOTH
PERCENT OPEN AREA	80%
A BB HEIGHT	1-1/2"
B BB THICKNESS	3/16"
C BB SPACING	1-3/16" ON CENTER
D CLEAR SPACE BTW BB	1"
E CROSS BAR SPACING	4" ON CENTER

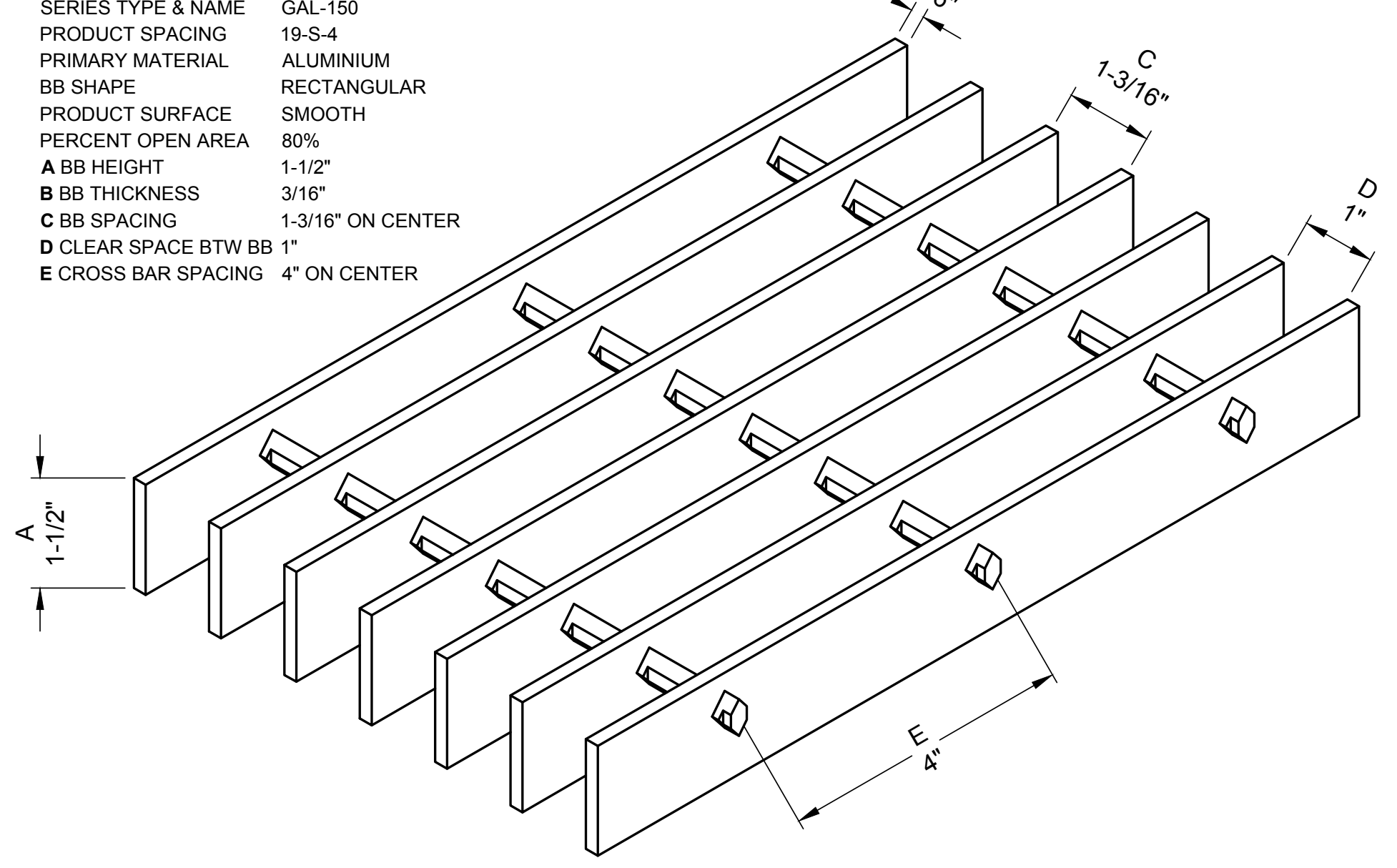
B
3/16"
C
1-3/16"
D
1"
A
1-1/2"
E
4"

OUTLET CONTROL STRUCTURE GRATE DETAIL

NOT TO SCALE

NOTES:

1. GRATE TO BE GAL-150 ALUMINUM BAR GRATING MANUFACTURED BY MCNICHOL COMPANY INC., OR APPROVED EQUIVALENT.

FOR TOWN USE

No.	REVISION	DATE

OWNER
I.H.C.C., INC. AND
ROBERG REVOCABLE TRUST
21 BREEZE HILL ROAD
NORTHPORT, NY, 11768
(631) 261 - 5700

APPLICANT:
THE PRESERVE AT INDIAN HILLS
1 RABRO DRIVE, SUITE 100
HAUPPAUGE, N.Y. 11788
(631) 351 - 4000

DRAINAGE DETAILS
FOR
THE PRESERVE AT INDIAN HILLS
SITUATED AT
NORTHPORT
TOWN OF HUNTINGTON, SUFFOLK COUNTY, NEW YORK
S.C.T.M.: DISTRICT: 0400, SECT. 014, BLK. 04, LOTS 1 AND 2
DISTRICT 0400, SECT. 015, BLK. 01, LOTS 3.1, 3.2, 11, 12, 16, 19 AND P/O 22

THOMAS CHARLES DIXON

NELSON + POPE
engineers • architects • surveyors
70 Maxess Road, Melville, NY 11747 • 631.427.5665 • nelsonpope.com

DRAWN BY: GEO	**CADD No.:** 86047 CSP 2021 DETAILS.DWG	**SCALE:** NONE	**DRAWING NO.:** C - 502
CHECKED BY: JM	**FILE NO.:** 400-014		
DATE: OCTOBER, 2021	**PROJECT NO.:** 86047		**SHEET NO.:** 36 OF 44

G:\projects\86047\FINALS\CONDOMINIUM\86047 CSP 2021 DETAILS.dwg, 36 OF 44 DRAINAGE DETAILS II, 10/11/2021 3:02:23 PM

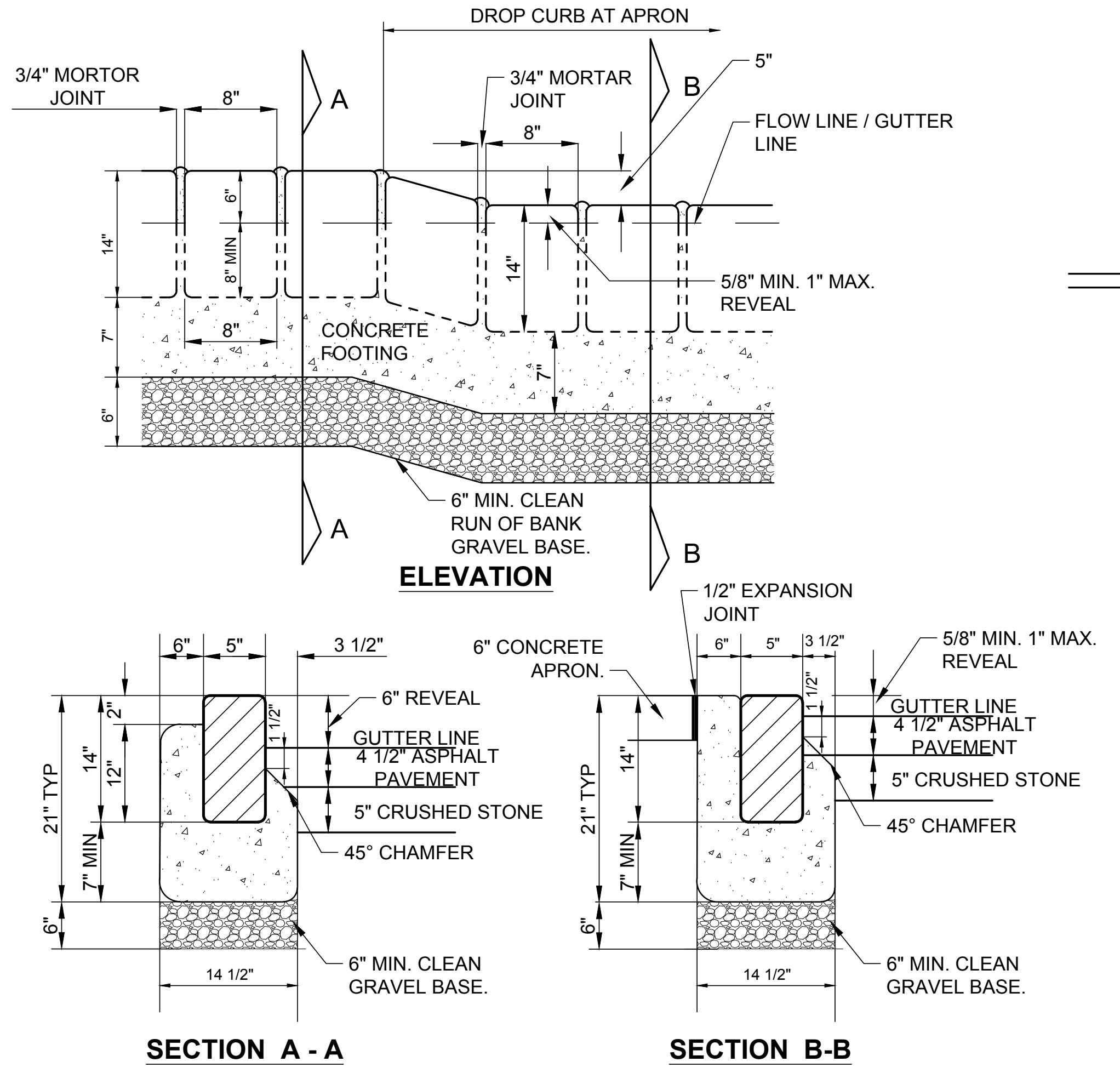
DROP CURB AT APRON
3/4" MORTOR JOINT
3/4" MORTAR JOINT
8"
5"
FLOW LINE / GUTTER LINE
5/8" MIN. 1" MAX. REVEAL
14"
6"
8" MIN
7"
CONCRETE FOOTING
6" MIN. CLEAN RUN OF BANK GRAVEL BASE.
A
B
ELEVATION
6" REVEAL
GUTTER LINE
4 1/2" ASPHALT PAVEMENT
5" CRUSHED STONE
45° CHAMFER
6" MIN. CLEAN GRAVEL BASE.
21" TYP
7" MIN
12"
2"
1 1/2"
3 1/2"
14 1/2"
1/2" EXPANSION JOINT
6" CONCRETE APRON.
5/8" MIN. 1" MAX. REVEAL
SECTION A - A
SECTION B-B

BELGIAN BLOCK CURB DETAIL

NOT TO SCALE

NOTES:

1. CONCRETE TO BE 1:2:4 MIX 4" - 5" SLUMP AGGREGATE PASSING 3/4" SIEVE.
2. TYPICAL BELGIAN BLOCK TO BE 5" x 8" x 14" WITH COMPRESSIVE STRENGTH OF 4,000 PSI MINIMUM.
3. ALL CONCRETE TO BE 4,000 PSI.
4. MORTAR MIX TO BE IN ALL JOINTS.
5. BLOCKS SHALL BE WASHED PRIOR TO INSTALLATION.

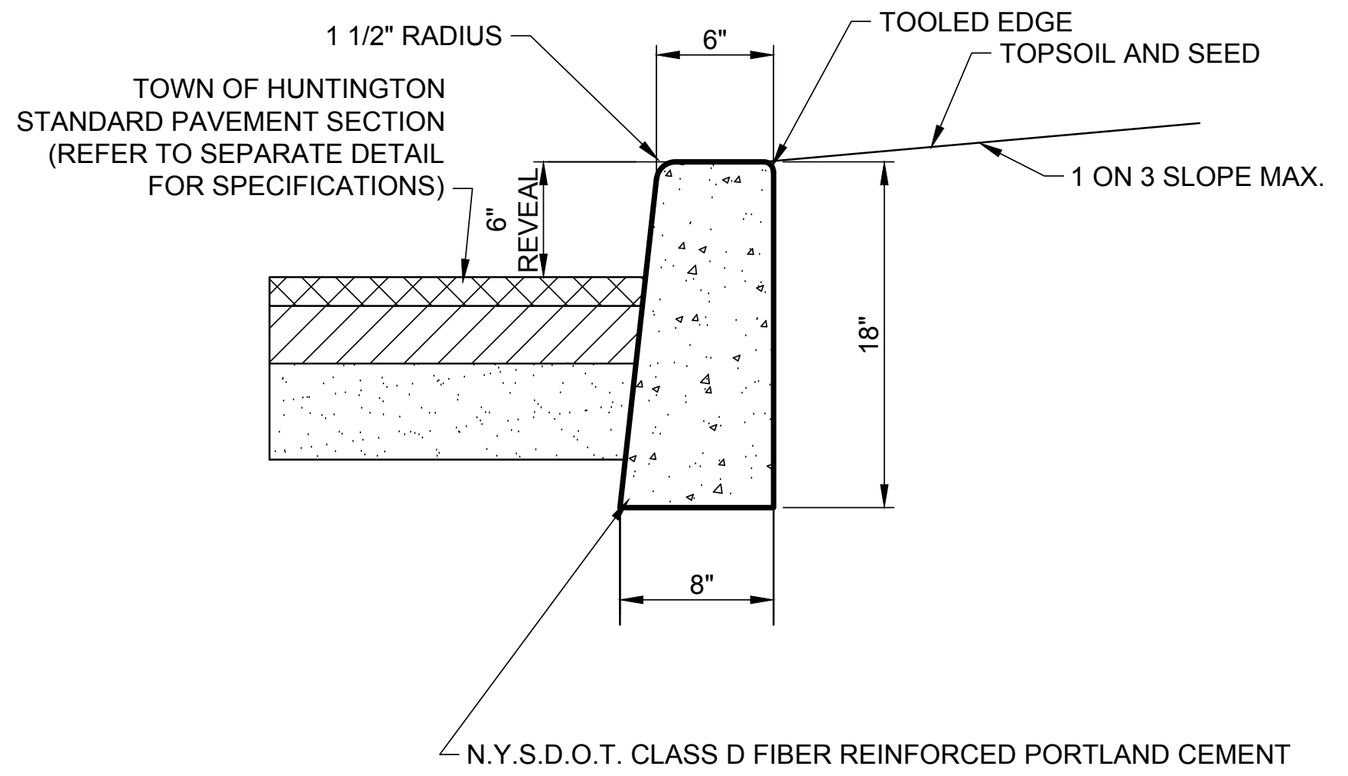
1 1/2" RADIUS
6"
TOOLED EDGE
TOPSOIL AND SEED
TOWN OF HUNTINGTON STANDARD PAVEMENT SECTION (REFER TO SEPARATE DETAIL FOR SPECIFICATIONS)
6" REVEAL
1 ON 3 SLOPE MAX.
18"
8"

N.Y.S.D.O.T. CLASS D FIBER REINFORCED PORTLAND CEMENT CONCRETE. 4000 PSI CONC. @ 28 DAYS AND SHALL BE AIR ENTRAINED. EXPANSION JOINTS SHALL BE 1/2" RIGID BITUMINOUS MATERIAL AND SHALL BE PLACED AT INTERVALS NO GREATER THAN 12'-0" O.C. AND AT ALL PC'S AND PT'S

CONCRETE CURB DETAIL

NOT TO SCALE

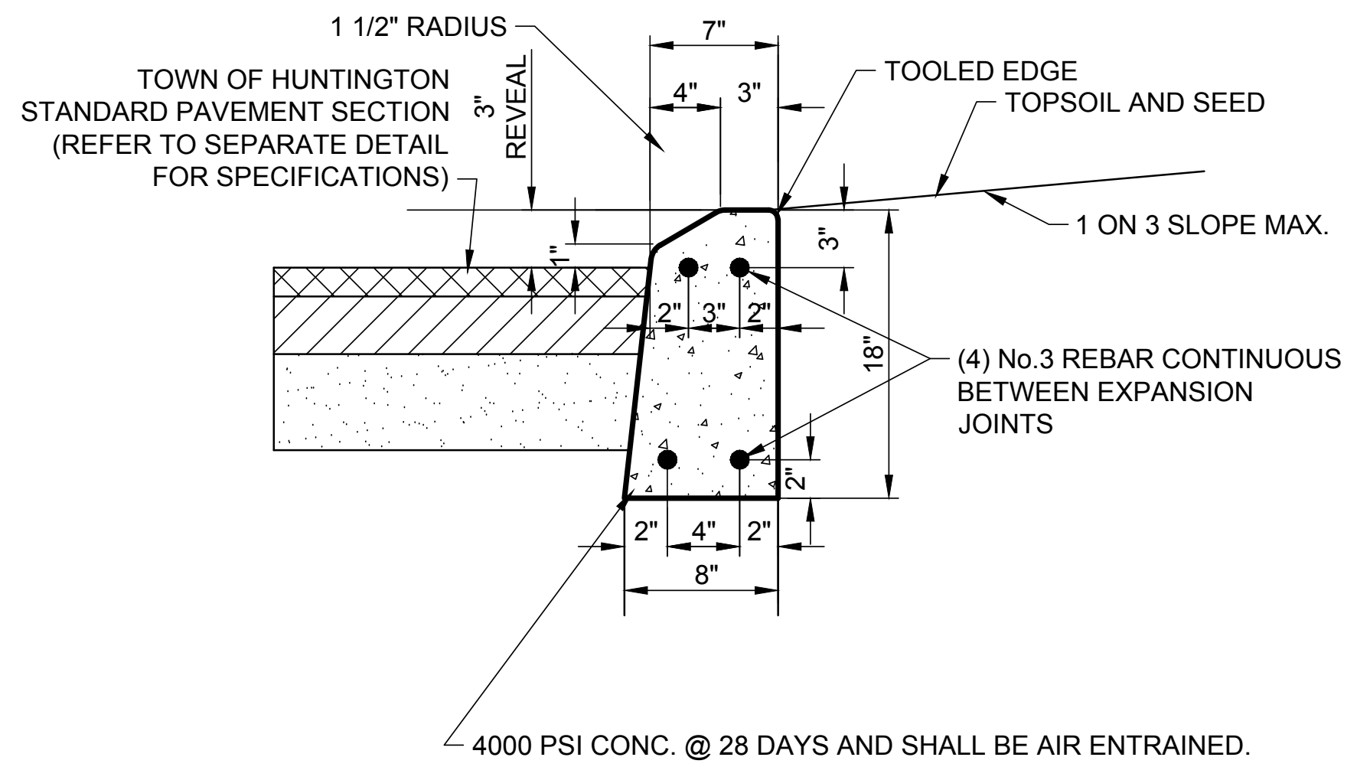
1 1/2" RADIUS
7"
4"
3"
TOOLED EDGE
TOPSOIL AND SEED
TOWN OF HUNTINGTON STANDARD PAVEMENT SECTION (REFER TO SEPARATE DETAIL FOR SPECIFICATIONS)
3" REVEAL
1 ON 3 SLOPE MAX.
1"
2"
18"
(4) No.3 REBAR CONTINUOUS BETWEEN EXPANSION JOINTS
8"

4000 PSI CONC. @ 28 DAYS AND SHALL BE AIR ENTRAINED. EXPANSION JOINTS SHALL BE 1/2" RIGID BITUMINOUS MATERIAL AND SHALL BE PLACED AT INTERVALS NO GREATER THAN 12'-0" O.C. AND AT ALL PC'S AND PT'S

CONCRETE MOUNTABLE CURB DETAIL

NOT TO SCALE

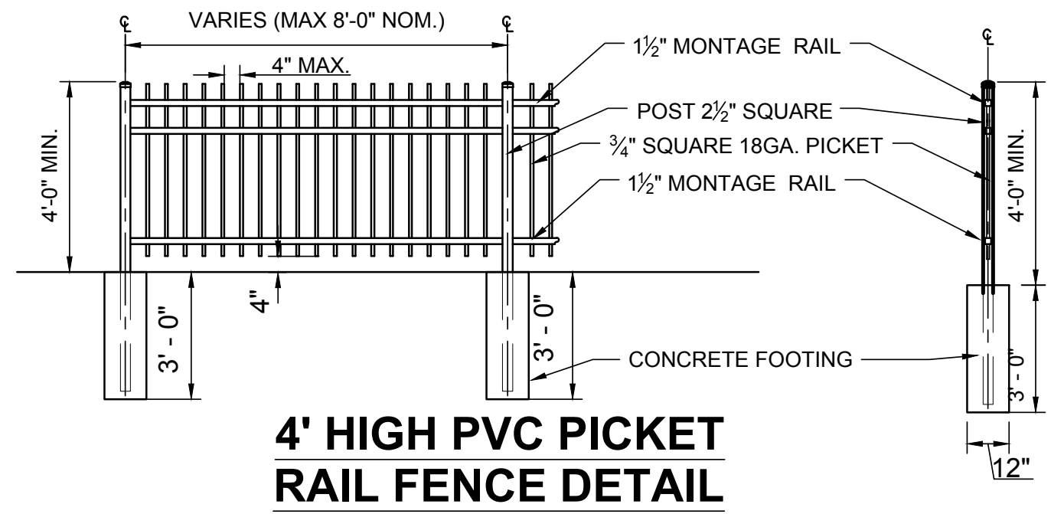
VARIES (MAX 8'-0" NOM.)
4" MAX.
1½" MONTAGE RAIL
POST 2½" SQUARE
¾" SQUARE 18GA. PICKET
1½" MONTAGE RAIL
4'-0" MIN.
4"
3' - 0"
CONCRETE FOOTING
12"

4' HIGH PVC PICKET RAIL FENCE DETAIL

NOT TO SCALE

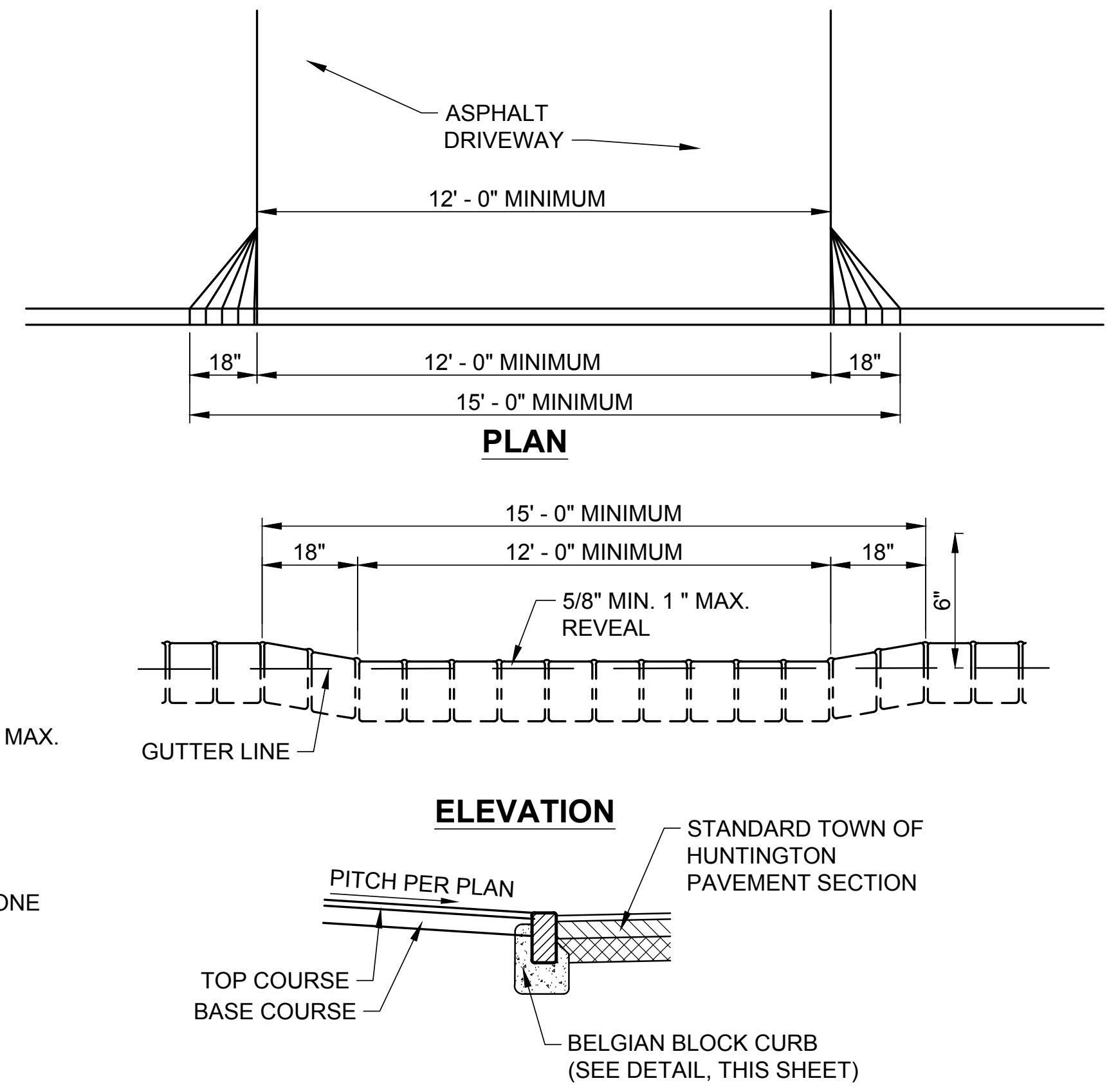
ASPHALT DRIVEWAY
12' - 0" MINIMUM
18"
15' - 0" MINIMUM
PLAN
5/8" MIN. 1 " MAX. REVEAL
6"
GUTTER LINE
ELEVATION
PITCH PER PLAN
STANDARD TOWN OF HUNTINGTON PAVEMENT SECTION
TOP COURSE
BASE COURSE
BELGIAN BLOCK CURB (SEE DETAIL, THIS SHEET)

TOP COURSE: 1 1/2" N.Y.S.D.O.T. TYPE 6 FRA
BASE COURSE: 5" STONE BLEND OR
6" RECYCLED CONCRETE AGGREGATE

SECTION

DRIVEWAY APRON DETAIL

NOT TO SCALE

NOTES:

1. 4,000 PSI CONCRETE AS PER N.Y.S.D.O.T. ITEM 608.0101

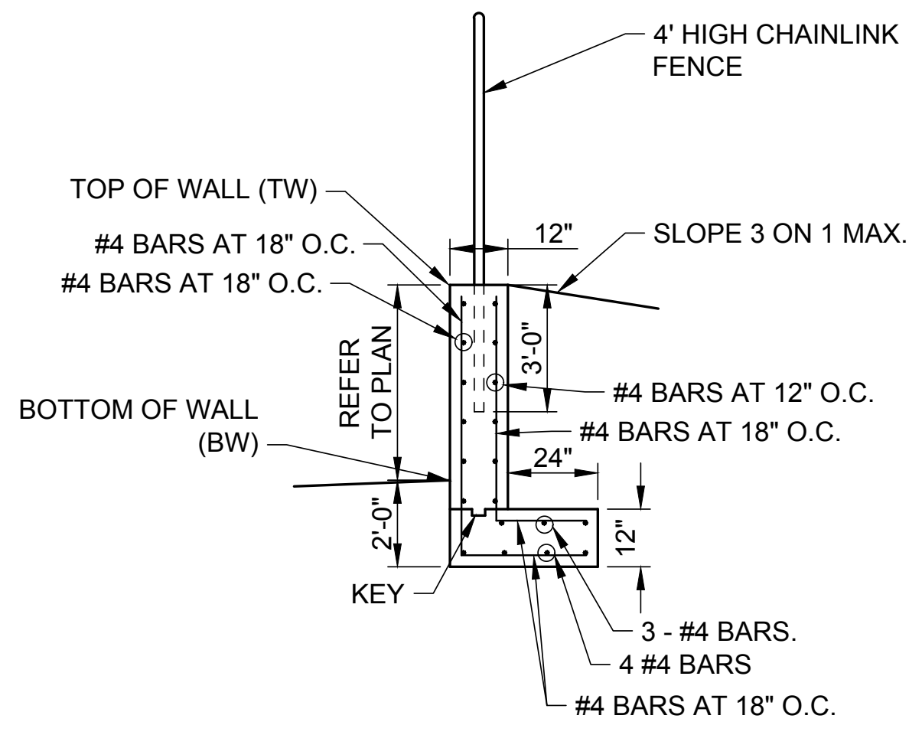
4' HIGH CHAINLINK FENCE
TOP OF WALL (TW)
#4 BARS AT 18" O.C.
#4 BARS AT 18" O.C.
12"
SLOPE 3 ON 1 MAX.
REFER TO PLAN
3'-0"
BOTTOM OF WALL (BW)
#4 BARS AT 12" O.C.
#4 BARS AT 18" O.C.
24"
2'-0"
12"
KEY
3 - #4 BARS.
4 #4 BARS
#4 BARS AT 18" O.C.

CONCRETE RETINING WALL

NOT TO SCALE

NOTES:

1. 4,000 PSI CONCRETE AS PER N.Y.S.D.O.T. ITEM 608.0101
2. ALL BARS SHALL HAVE A MINIMUM COVER OF 2"

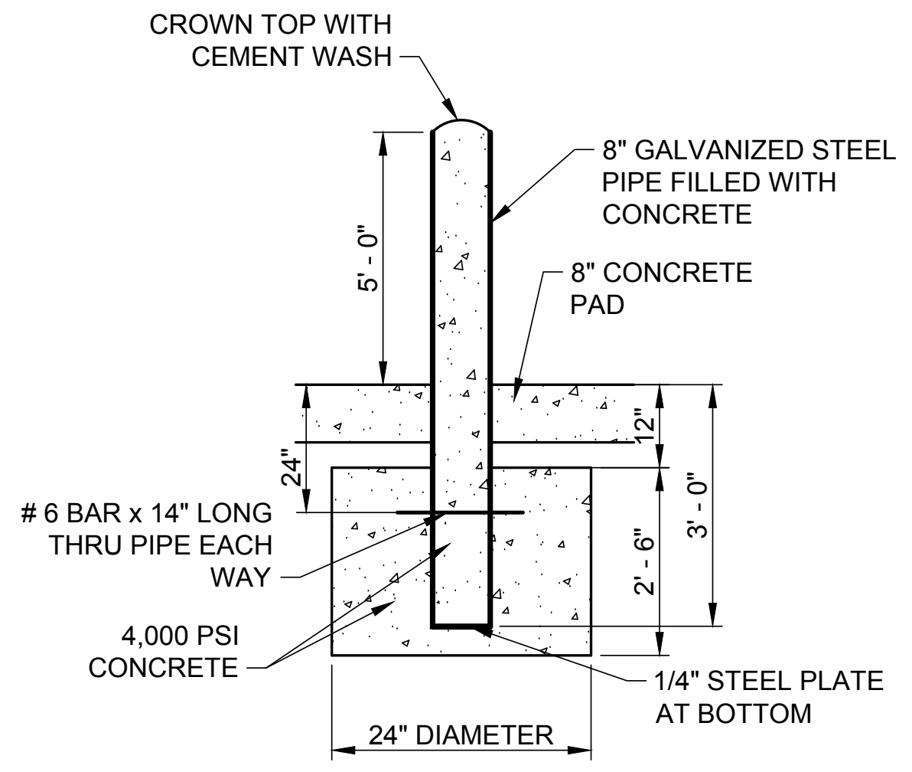
CROWN TOP WITH CEMENT WASH
8" GALVANIZED STEEL PIPE FILLED WITH CONCRETE
8" CONCRETE PAD
5' - 0"
24"
12"
3' - 0"
2' - 6"
# 6 BAR x 14" LONG THRU PIPE EACH WAY
4,000 PSI CONCRETE
1/4" STEEL PLATE AT BOTTOM
24" DIAMETER

BOLLARD DETAIL

NOT TO SCALE

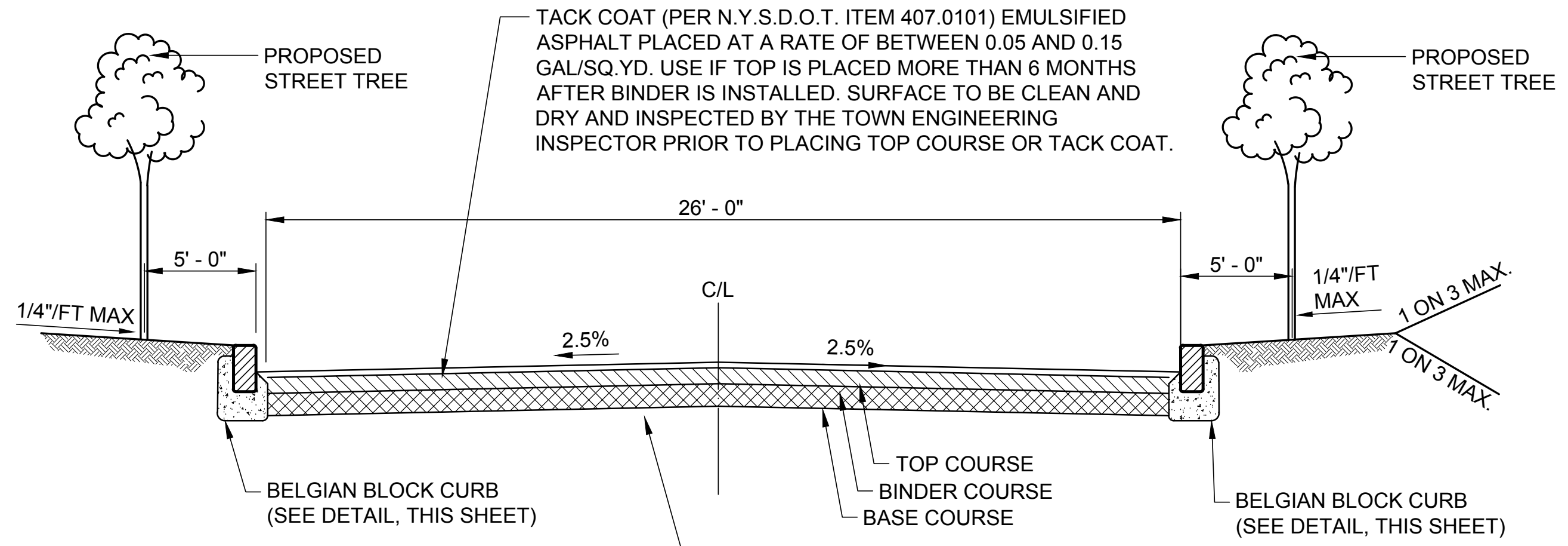
PROPOSED STREET TREE
PROPOSED STREET TREE
26' - 0"
5' - 0"
5' - 0"
1/4"/FT MAX
1/4"/FT MAX
C/L
2.5%
2.5%
1 ON 3 MAX.
1 ON 3 MAX.
BELGIAN BLOCK CURB (SEE DETAIL, THIS SHEET)
TOP COURSE
BINDER COURSE
BASE COURSE
BELGIAN BLOCK CURB (SEE DETAIL, THIS SHEET)

TACK COAT (PER N.Y.S.D.O.T. ITEM 407.0101) EMULSIFIED ASPHALT PLACED AT A RATE OF BETWEEN 0.05 AND 0.15 GAL/SQ.YD. USE IF TOP IS PLACED MORE THAN 6 MONTHS AFTER BINDER IS INSTALLED. SURFACE TO BE CLEAN AND DRY AND INSPECTED BY THE TOWN ENGINEERING INSPECTOR PRIOR TO PLACING TOP COURSE OR TACK COAT.

TOP COURSE: 1 1/2" N.Y.S.D.O.T. TYPE 6 FRA
BINDER COURSE: 3" N.Y.S.D.O.T. TYPE 3RA
BASE COURSE: 5" STONE BLEND OR
6" RECYCLED CONCRETE AGGREGATE

COMPACTED EXISTING GROUND IF SUITABLE. REMOVE ALL UNSUITABLE MATERIAL AND REPLACE WITH SUITABLE COMPACTED MATERIAL. ALL AS DIRECTED BY THE TOWN ENGINEER. COMPACTION UTILIZING OPTIMUM MOISTURE CONTENT TO AT LEAST 95% STANDARD PROCTOR DENSITY. SUBMIT TEST RESULTS FROM ASTM D698 (MOISTURE) AND ASTM D2922 (DENSITY PER NUCLEAR METHODS) FOR REVIEW.

STANDARD ROADWAY SECTION

NOT TO SCALE

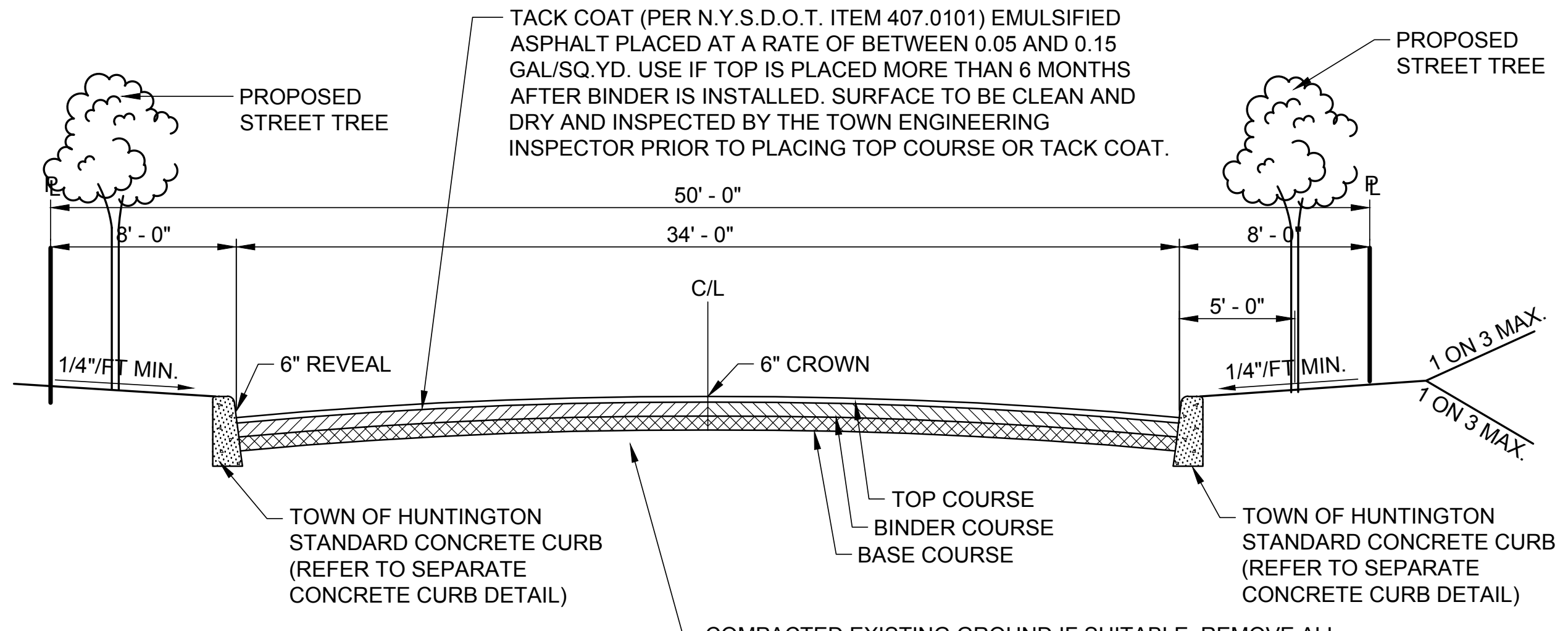
PROPOSED STREET TREE
PROPOSED STREET TREE
50' - 0"
8' - 0"
34' - 0"
8' - 0"
5' - 0"
C/L
1/4"/FT MIN.
6" REVEAL
6" CROWN
1/4"/FT MIN.
1 ON 3 MAX.
1 ON 3 MAX.
TOWN OF HUNTINGTON STANDARD CONCRETE CURB (REFER TO SEPARATE CONCRETE CURB DETAIL)
TOP COURSE
BINDER COURSE
BASE COURSE
TOWN OF HUNTINGTON STANDARD CONCRETE CURB (REFER TO SEPARATE CONCRETE CURB DETAIL)

TACK COAT (PER N.Y.S.D.O.T. ITEM 407.0101) EMULSIFIED ASPHALT PLACED AT A RATE OF BETWEEN 0.05 AND 0.15 GAL/SQ.YD. USE IF TOP IS PLACED MORE THAN 6 MONTHS AFTER BINDER IS INSTALLED. SURFACE TO BE CLEAN AND DRY AND INSPECTED BY THE TOWN ENGINEERING INSPECTOR PRIOR TO PLACING TOP COURSE OR TACK COAT.

TOP COURSE: 1 1/2" N.Y.S.D.O.T. TYPE 6FRA
BINDER COURSE: 3" N.Y.S.D.O.T. TYPE 3RA
BASE COURSE: 5" STONE BLEND OR
6" RECYCLED CONCRETE
AGGREGATE

COMPACTED EXISTING GROUND IF SUITABLE. REMOVE ALL UNSUITABLE MATERIAL AND REPLACE WITH SUITABLE COMPACTED MATERIAL. ALL AS DIRECTED BY THE TOWN ENGINEER. COMPACTION UTILIZING OPTIMUM MOISTURE CONTENT TO AT LEAST 95% STANDARD PROCTOR DENSITY. SUBMIT TEST RESULTS FROM ASTM D698 (MOISTURE) AND ASTM D2922 (DENSITY PER NUCLEAR METHODS) FOR REVIEW.

MYSTIC LANE ROADWAY SECTION

NOT TO SCALE

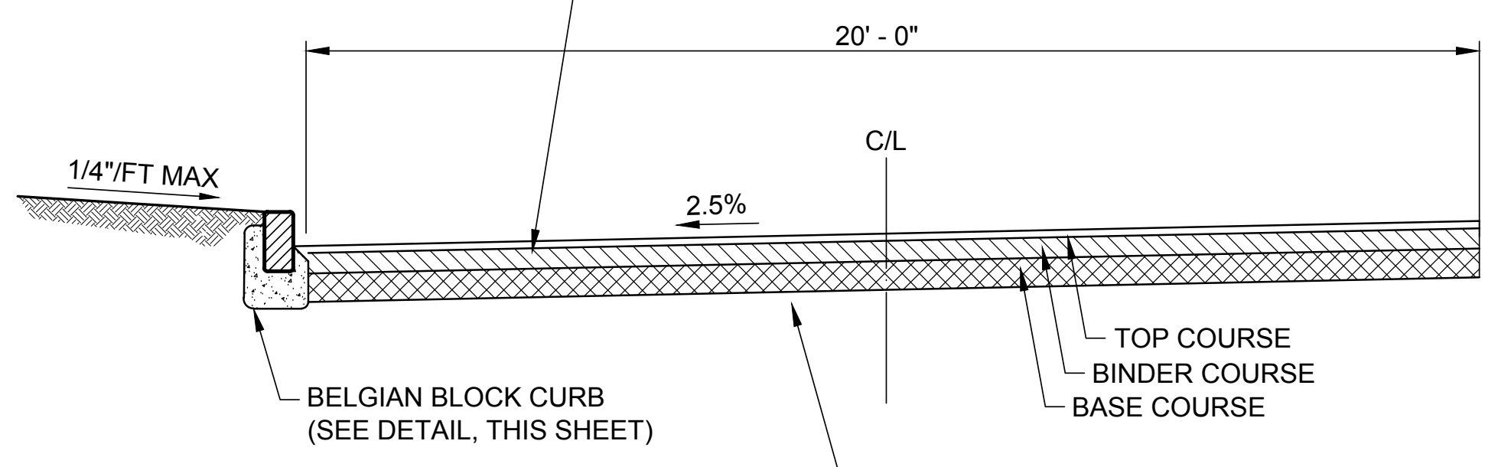
20' - 0"
C/L
1/4"/FT MAX
2.5%
BELGIAN BLOCK CURB (SEE DETAIL, THIS SHEET)
TOP COURSE
BINDER COURSE
BASE COURSE

TACK COAT (PER N.Y.S.D.O.T. ITEM 407.0101) EMULSIFIED ASPHALT PLACED AT A RATE OF BETWEEN 0.05 AND 0.15 GAL/SQ.YD. USE IF TOP IS PLACED MORE THAN 6 MONTHS AFTER BINDER IS INSTALLED. SURFACE TO BE CLEAN AND DRY AND INSPECTED BY THE TOWN ENGINEERING INSPECTOR PRIOR TO PLACING TOP COURSE OR TACK COAT.

TOP COURSE: 1 1/2" N.Y.S.D.O.T. TYPE 6 FRA
BINDER COURSE: 3" N.Y.S.D.O.T. TYPE 3RA
BASE COURSE: 5" STONE BLEND OR
6" RECYCLED CONCRETE AGGREGATE

COMPACTED EXISTING GROUND IF SUITABLE. REMOVE ALL UNSUITABLE MATERIAL AND REPLACE WITH SUITABLE COMPACTED MATERIAL. ALL AS DIRECTED BY THE TOWN ENGINEER. COMPACTION UTILIZING OPTIMUM MOISTURE CONTENT TO AT LEAST 95% STANDARD PROCTOR DENSITY. SUBMIT TEST RESULTS FROM ASTM D698 (MOISTURE) AND ASTM D2922 (DENSITY PER NUCLEAR METHODS) FOR REVIEW.

MAKAMAH PATH ROADWAY SECTION
STATION 7+15 TO 9+75

NOT TO SCALE

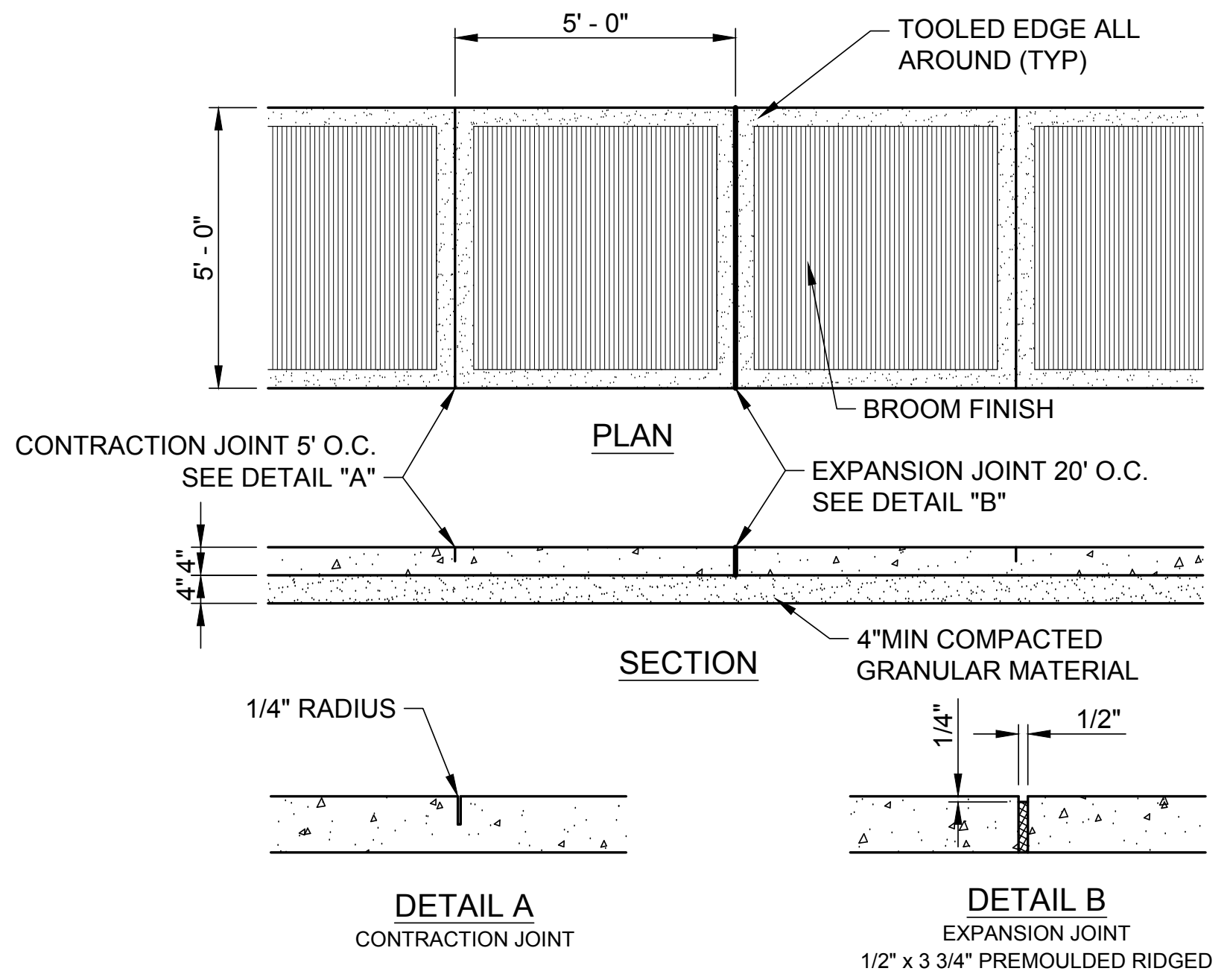
5' - 0"
TOOLED EDGE ALL AROUND (TYP)
5' - 0"
BROOM FINISH
PLAN
CONTRACTION JOINT 5' O.C. SEE DETAIL "A"
EXPANSION JOINT 20' O.C. SEE DETAIL "B"
4"
4"
4"MIN COMPACTED GRANULAR MATERIAL
SECTION
1/4" RADIUS
1/4"
1/2"
DETAIL A
CONTRACTION JOINT
DETAIL B
EXPANSION JOINT
1/2" x 3 3/4" PREMOULDED RIDGED BITUMINOUS MATERIAL

CONCRETE SIDEWALK DETAIL

NOT TO SCALE

1. CONCRETE SHALL BE 4,000 PSI AT 28 DAYS AND SHALL BE AIR ENTRAINED.

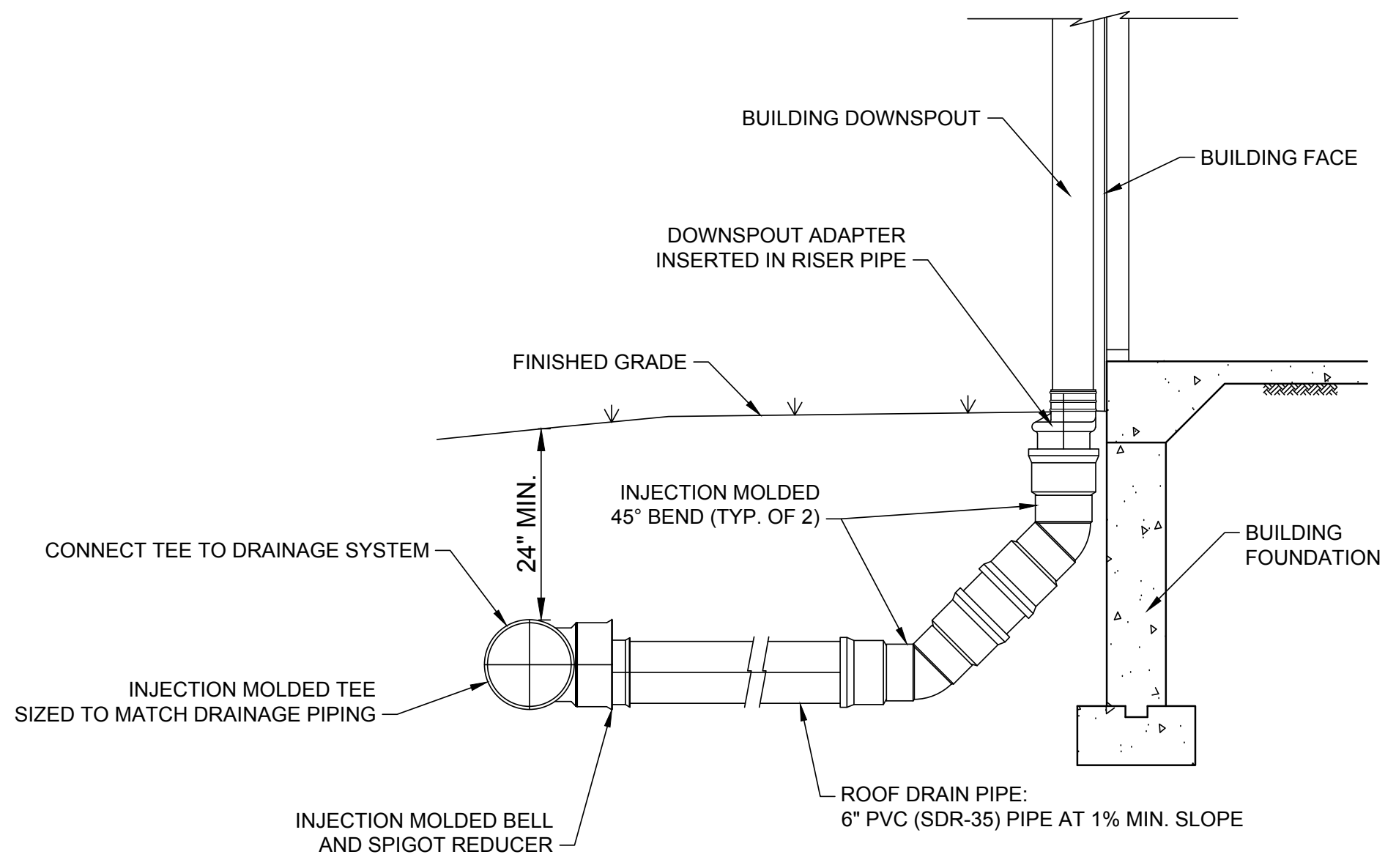
BUILDING DOWNSPOUT
BUILDING FACE
DOWNSPOUT ADAPTER INSERTED IN RISER PIPE
FINISHED GRADE
24" MIN.
INJECTION MOLDED 45° BEND (TYP. OF 2)
CONNECT TEE TO DRAINAGE SYSTEM
BUILDING FOUNDATION
INJECTION MOLDED TEE SIZED TO MATCH DRAINAGE PIPING
INJECTION MOLDED BELL AND SPIGOT REDUCER
ROOF DRAIN PIPE: 6" PVC (SDR-35) PIPE AT 1% MIN. SLOPE

DOWNSPOUT CONNECTION DETAIL

NOT TO SCALE

NOTES:

1. ALL PIPE AND FITTINGS SHALL BE INSTALLED AS PER MANUFACTURERS RECOMMENDATIONS.
2. ALL FITTINGS AND CONNECTIONS SHALL BE SOIL-TIGHT (ST) UNLESS OTHERWISE NOTED.
3. REFER TO ARCHITECTS PLANS FOR DOWNSPOUT LOCATIONS AND SIZES.

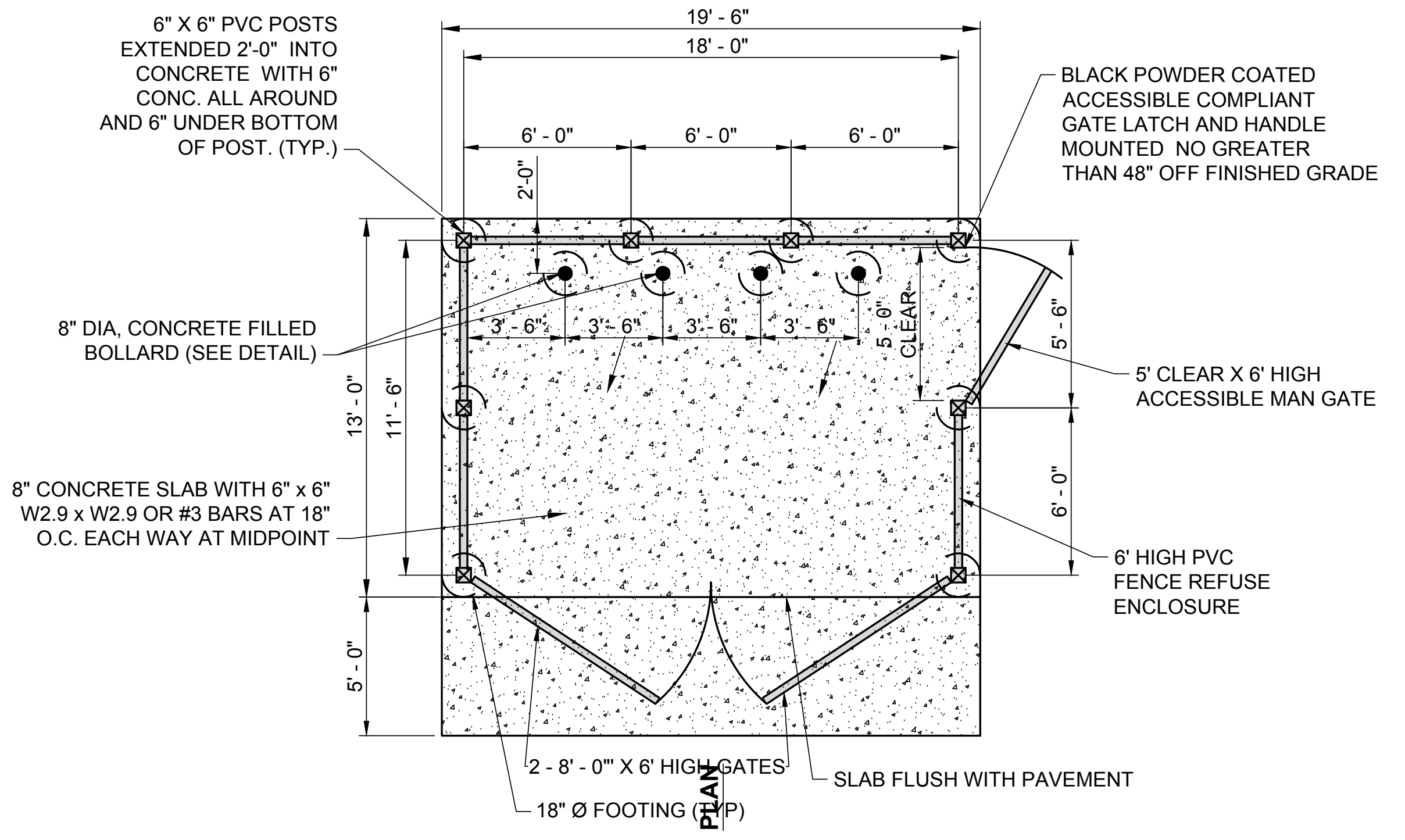
19' - 6"
18' - 0"
6' - 0"
6' - 0"
6' - 0"
2'-0"
6" X 6" PVC POSTS EXTENDED 2'-0" INTO CONCRETE WITH 6" CONC. ALL AROUND AND 6" UNDER BOTTOM OF POST. (TYP.)
BLACK POWDER COATED ACCESSIBLE COMPLIANT GATE LATCH AND HANDLE MOUNTED NO GREATER THAN 48" OFF FINISHED GRADE
8" DIA, CONCRETE FILLED BOLLARD (SEE DETAIL)
3' - 6"
5 - 0" CLEAR
5' - 6"
5' CLEAR X 6' HIGH ACCESSIBLE MAN GATE
13' - 0"
11' - 6"
6' - 0"
8" CONCRETE SLAB WITH 6" x 6" W2.9 x W2.9 OR #3 BARS AT 18" O.C. EACH WAY AT MIDPOINT
6' HIGH PVC FENCE REFUSE ENCLOSURE
5' - 0"
2 - 8' - 0"' X 6' HIGH GATES
SLAB FLUSH WITH PAVEMENT
18" Ø FOOTING (TYP)
PLAN

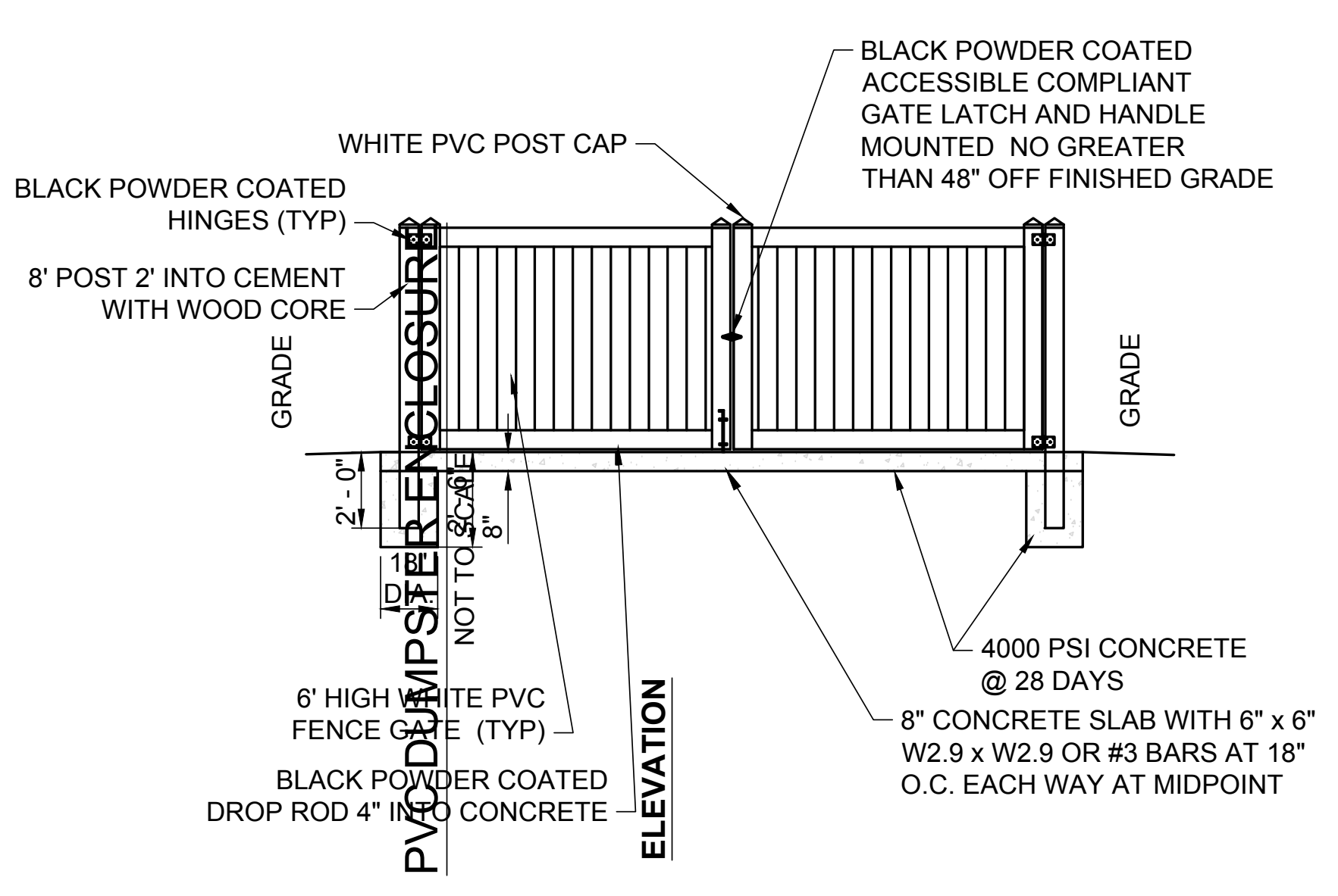
WHITE PVC POST CAP
BLACK POWDER COATED ACCESSIBLE COMPLIANT GATE LATCH AND HANDLE MOUNTED NO GREATER THAN 48" OFF FINISHED GRADE
BLACK POWDER COATED HINGES (TYP)
8' POST 2' INTO CEMENT WITH WOOD CORE
GRADE
GRADE
2' - 0"
2'
8"
18" DIA.
4000 PSI CONCRETE @ 28 DAYS
8" CONCRETE SLAB WITH 6" x 6" W2.9 x W2.9 OR #3 BARS AT 18" O.C. EACH WAY AT MIDPOINT
6' HIGH WHITE PVC FENCE GATE (TYP)
BLACK POWDER COATED DROP ROD 4" INTO CONCRETE
ELEVATION

PVC DUMPSTER ENCLOSURE

NOT TO SCALE

FOR TOWN USE

No.	REVISION	DATE

OWNER
I.H.C.C., INC. AND
ROBERG REVOCABLE TRUST
21 BREEZE HILL ROAD
NORTHPORT, NY, 11768
(631) 261 - 5700

APPLICANT:
THE PRESERVE AT INDIAN HILLS
1 RABRO DRIVE, SUITE 100
HAUPPAUGE, N.Y. 11788
(631) 351 - 4000

SITE DETAILS
FOR
THE PRESERVE AT INDIAN HILLS
SITUATED AT
NORTHPORT
TOWN OF HUNTINGTON, SUFFOLK COUNTY, NEW YORK
S.C.T.M.: DISTRICT: 0400, SECT. 014, BLK. 04, LOTS 1 AND 2
DISTRICT 0400, SECT. 015, BLK. 01, LOTS 3.1, 3.2, 11, 12, 16, 19 AND P/O 22

THOMAS CHARLES DIXON

NELSON + POPE
engineers • architects • surveyors
70 Maxess Road, Melville, NY 11747 • 631.427.5665 • nelsonpope.com

DRAWN BY: GEO	CADD No.: 86047 CSP 2021 DETAILS.DWG	SCALE:	DRAWING NO.:
CHECKED BY: JM	FILE NO.: 400-014	NONE	C - 503
DATE: OCTOBER, 2021	PROJECT NO.: 86047		SHEET NO.: 37 OF 44

IT IS A VIOLATION OF NEW YORK STATE EDUCATION LAW ARTICLE 145, PROFESSIONAL ENGINEERING AND LAND SURVEYING, SECTION 7209 FOR ANY PERSON, UNLESS HE IS ACTING UNDER THE DIRECTION OF A LICENSED PROFESSIONAL ENGINEER OR LAND SURVEYOR, TO ALTER AN ITEM IN ANY WAY. IF AN ITEM BEARING THE SEAL OF AN ENGINEER OR LAND SURVEYOR IS ALTERED, THE ALTERING ENGINEER OR LAND SURVEYOR SHALL AFFIX TO THE ITEM HIS SEAL AND NOTATION "ALTERED BY" FOLLOWED BY HIS SIGNATURE AND THE DATE OF SUCH ALTERATION, AND SPECIFIC DESCRIPTION OF THE ALTERATION.

G:\projects\86047\FINALS\CONDOMINIUM\86047 CSP 2021 DETAILS.dwg, 37 OF 44 SITE DETAILS, 10/11/2021 3:02:28 PM

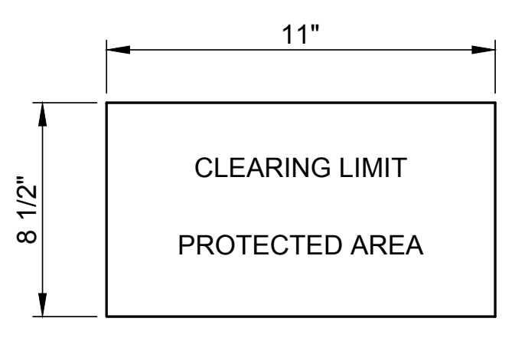
11"
8 1/2"
CLEARING LIMIT
PROTECTED AREA

CLEARING SIGN DETAIL

NOTES:
1. THE SIGNS SHALL BE ATTACHED TO THE FENCE WITH WIRE SUBJECT TO THE APPROVAL OF THE ENGINEERING INSPECTOR.
2. SIGNS AND LETTERING SHALL BE OF WATERPROOF MATERIAL SUBJECT TO THE APPROVAL OF THE TOWN ENGINEERING INSPECTOR.
3. THE SIGNS SHALL BE LOCATED ON FENCING 20' MAXIMUM ON CENTER.
4. LETTERING SHALL BE 1" MINIMUM IN HEIGHT

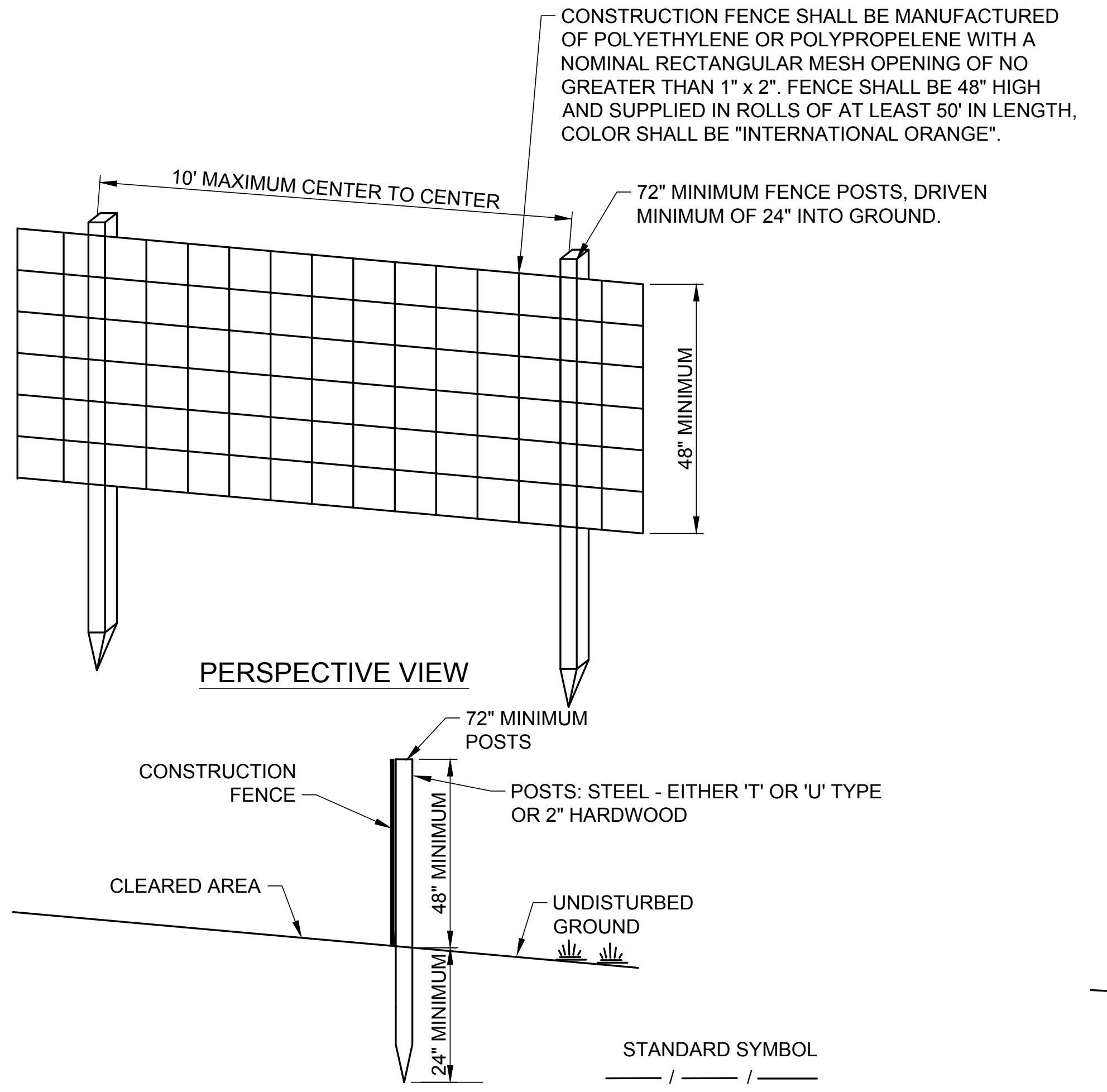
CONSTRUCTION FENCE SHALL BE MANUFACTURED OF POLYETHYLENE OR POLYPROPELENE WITH A NOMINAL RECTANGULAR MESH OPENING OF NO GREATER THAN 1" x 2". FENCE SHALL BE 48" HIGH AND SUPPLIED IN ROLLS OF AT LEAST 50' IN LENGTH, COLOR SHALL BE "INTERNATIONAL ORANGE".

10' MAXIMUM CENTER TO CENTER
72" MINIMUM FENCE POSTS, DRIVEN MINIMUM OF 24" INTO GROUND.
48" MINIMUM
PERSPECTIVE VIEW
72" MINIMUM POSTS
CONSTRUCTION FENCE
POSTS: STEEL - EITHER 'T' OR 'U' TYPE OR 2" HARDWOOD
CLEARED AREA
48" MINIMUM
UNDISTURBED GROUND
24" MINIMUM
STANDARD SYMBOL
—— / —— / ——

CONSTRUCTION FENCE DETAIL

NOT TO SCALE

NOTES
1. THE CONTRACTOR SHALL INSTALL THE CONSTRUCTION FENCE IN LOCATIONS AS REQUIRED BY THE DRAWINGS AND SPECIFICATIONS OR MUNICIPAL AUTHORITIES.
2. THE PRIMARY PURPOSE OF THE CONSTRUCTION FENCE IS TO CLEARLY DELINEATE A CONSTRUCTION AREA AND PROVIDE SOME MEASURE OF PROTECTION FOR THE SURROUNDING NATURAL AREAS. IT IS NOT DESIGNED OR INTENDED TO BE AN IMPENETRABLE BARRIER TO THOSE INTENT ON ENTERING THE CONSTRUCTION SITE.
3. CONSTRUCTION FENCE SHALL BE INSTALLED BY WEAVING FENCE POSTS VERTICALLY THROUGH AT LEAST THREE (3) MESH OPENINGS (TOP, MIDDLE AND BOTTOM OF FENCE) AND DRIVING POSTS WITH A 3LB. HAND DRILLING HAMMER (OR EQUIVALENT) FLUSH WITH THE TOP OF FENCING. POSTS SHALL BE AT AN INTERVAL OF NO GREATER THAN TEN FEET. FENCING SHALL BE SECURED FIRMLY TO EACH POST AT THE TOP, BOTTOM AND MID-POINT WITH WIRE REBAR TIES. WHERE LENGTHS OF FENCING ARE JOINED, A POST SHALL BE WOVEN THROUGH BOTH FENCE SECTIONS AT THE JOINT, WITH TIES FASTENING BOTH FENCE SECTIONS TO THE POST. FENCING SHALL BE STRETCHED AS TAUT AS PRACTICAL BETWEEN FENCE POSTS WITHOUT INORDINATELY DEFLECTING POSTS. TEMPORARY OPENINGS IN CONSTRUCTION FENCE INSTALLATIONS SHALL BE PERMITTED FOR ENTRY OF WORKERS, MATERIALS AND EQUIPMENT. SUCH OPENINGS SHALL BE SECURED AT THE END OF EACH WORK DAY IN THE MANNER AFOREMENTIONED FOR JOINING FENCE SECTIONS.
4. POSTS: STEEL, EITHER "T" OR "U" TYPE OR 2" HARDWOOD.

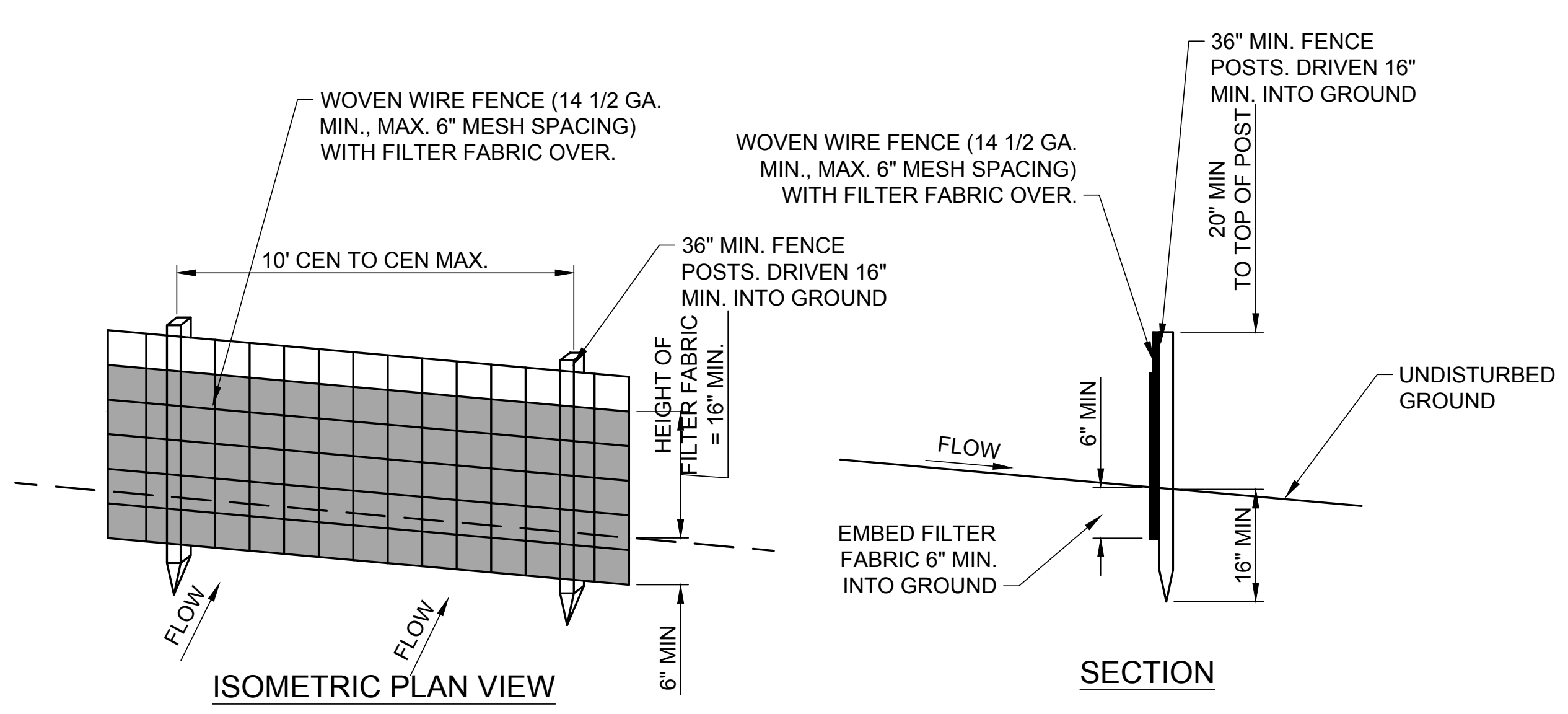
WOVEN WIRE FENCE (14 1/2 GA. MIN., MAX. 6" MESH SPACING) WITH FILTER FABRIC OVER.
10' CEN TO CEN MAX.
36" MIN. FENCE POSTS. DRIVEN 16" MIN. INTO GROUND
HEIGHT OF FILTER FABRIC = 16" MIN.
FLOW
FLOW
6" MIN
ISOMETRIC PLAN VIEW
36" MIN. FENCE POSTS. DRIVEN 16" MIN. INTO GROUND
WOVEN WIRE FENCE (14 1/2 GA. MIN., MAX. 6" MESH SPACING) WITH FILTER FABRIC OVER.
20" MIN TO TOP OF POST
UNDISTURBED GROUND
FLOW
6" MIN
EMBED FILTER FABRIC 6" MIN. INTO GROUND
16" MIN
SECTION

SILT FENCE DETAIL

NOT TO SCALE

STANDARD SYMBOL
—— SF ——

NOTES
1. WOVEN WIRE FENCE TO BE FASTENED SECURELY TO FENCE POSTS WITH WIRE TIES OR STAPLES.
2. FILTER CLOTH TO BE FASTENED SECURELY TO WOVEN WIRE FENCE WITH TIES SPACED EVERY 24" AT TOP AND MID SECTION.
3. WHEN TWO SECTIONS OF FILTER CLOTH ADJOIN EACH OTHER THEY SHALL BE OVERLAPPED BY SIX INCHES AND FOLDED.
4. MAINTENANCE SHALL BE PERFORMED AS NEEDED AND MATERIAL REMOVED WHEN "BULGES" DEVELOP IN THE SILT FENCE.
5. POSTS: STEEL EITHER T OR U TYPE OR 2" HARDWOOD.
6. FENCE: WOVEN WIRE, 14 1/2 GA. 6" MAX.MESH OPENING.
7. FILTER CLOTH SHALL BE A WOVEN GEOTEXTILE COMPOSED OF POLYPROPYLENE CONFORMING TO AASHTO M288.

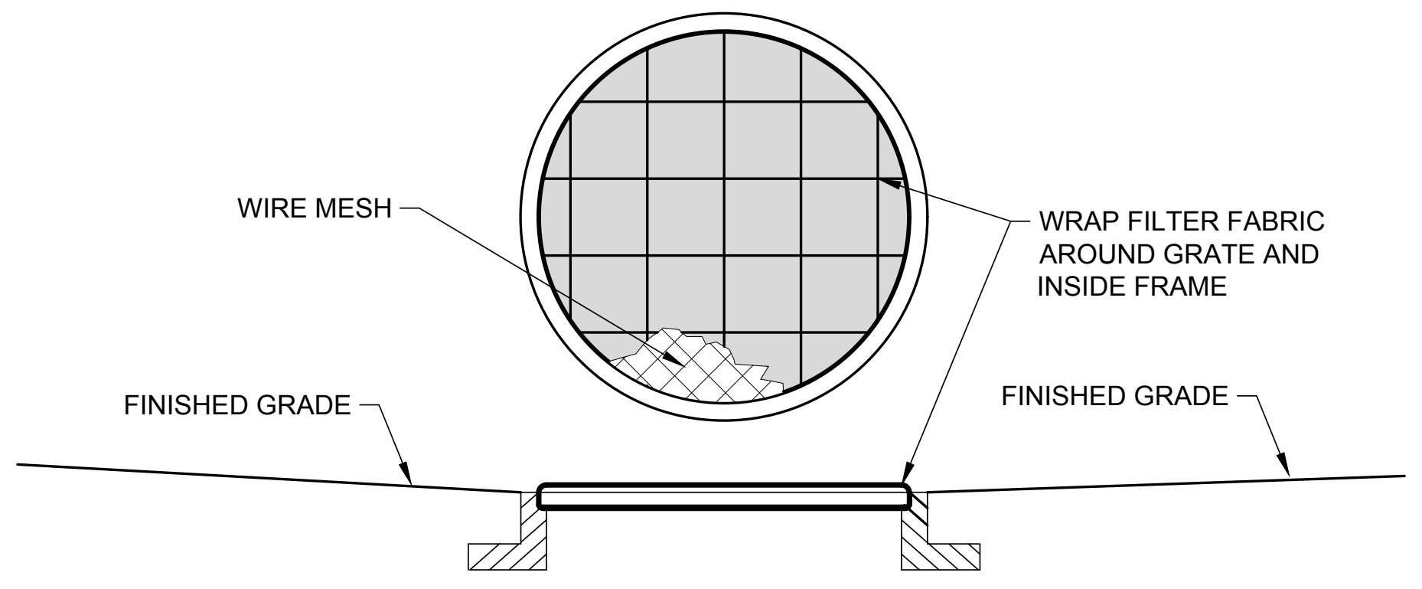
WIRE MESH
WRAP FILTER FABRIC AROUND GRATE AND INSIDE FRAME
FINISHED GRADE
FINISHED GRADE

INLET GRATE PROTECTION DETAIL

NOT TO SCALE

STANDARD SYMBOL

NOTES
1. FILTER FABRIC SHALL HAVE AN APPROVED AOS OF 40-85
2. MAINTAIN / REPLACE FILTER FABRIC AS REQUIRED.

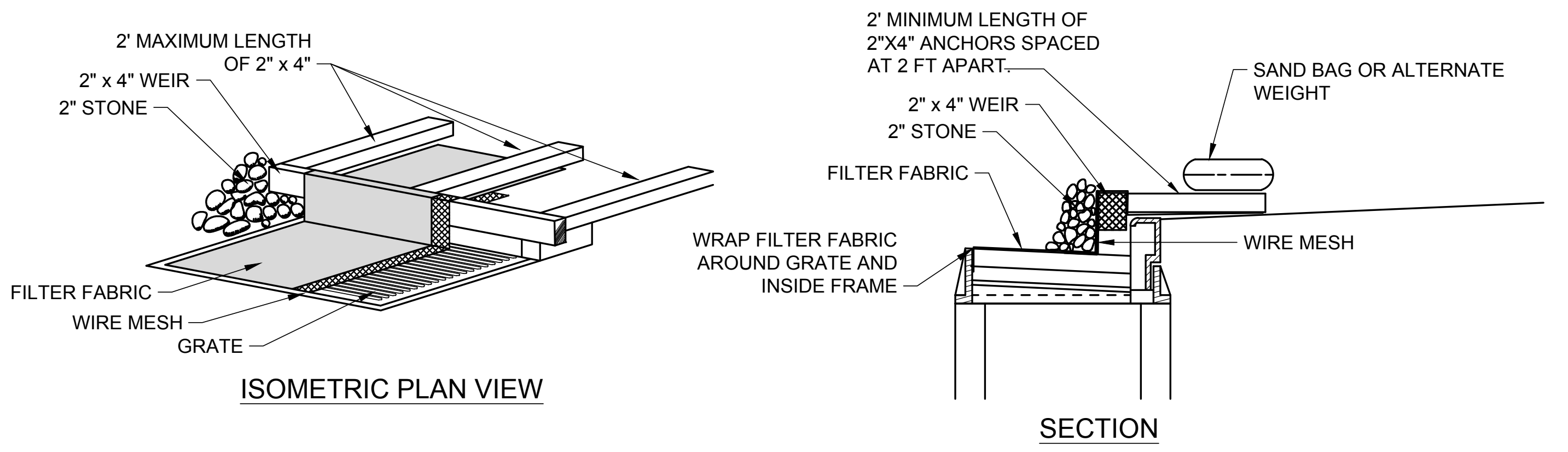
2' MAXIMUM LENGTH OF 2" x 4"
2" x 4" WEIR
2" STONE
FILTER FABRIC
WIRE MESH
GRATE
ISOMETRIC PLAN VIEW
2' MINIMUM LENGTH OF 2"X4" ANCHORS SPACED AT 2 FT APART.
SAND BAG OR ALTERNATE WEIGHT
2" x 4" WEIR
2" STONE
FILTER FABRIC
WRAP FILTER FABRIC AROUND GRATE AND INSIDE FRAME
WIRE MESH
SECTION

CURB AND GRATE INLET PROTECTION

NOT TO SCALE

STANDARD SYMBOL

1. FILTER FABRIC SHALL HAVE AN AOS OF 40-85.
2. WOODEN FRAME SHALL BE CONSTRUCTED OF 2" x 4" CONSTRUCTION GRADE LUMBER.
3. WIRE MESH ACROSS THROAT SHALL BE A CONTINUOUS PIECE 30 INCH MINIMUM WIDTH WITH A LENGTH 4 FEET LONGER THAN THE THROAT. IT SHALL BE SHAPED AND SECURELY NAILED TO A 2" x 4" WEIR.
4. THE WEIR SHALL BE SECURELY NAILED TO 2" x 4" SPACERS 9 INCHES LONG SPACED NO MORE THAN 6 FEET APART.
5. 5. THE ASSEMBLY SHALL BE PLACED AGAINST THE INLET AND SECURED BY 2" x 4" ANCHORS 2 FEET LONG EXTENDING ACROSS THE TOP OF THE INLET AND HELD IN PLACE BY SANDBAGS OR ALTERNATE WEIGHTS.
6. MAXIMUM DRAINAGE AREA 1 ACRE

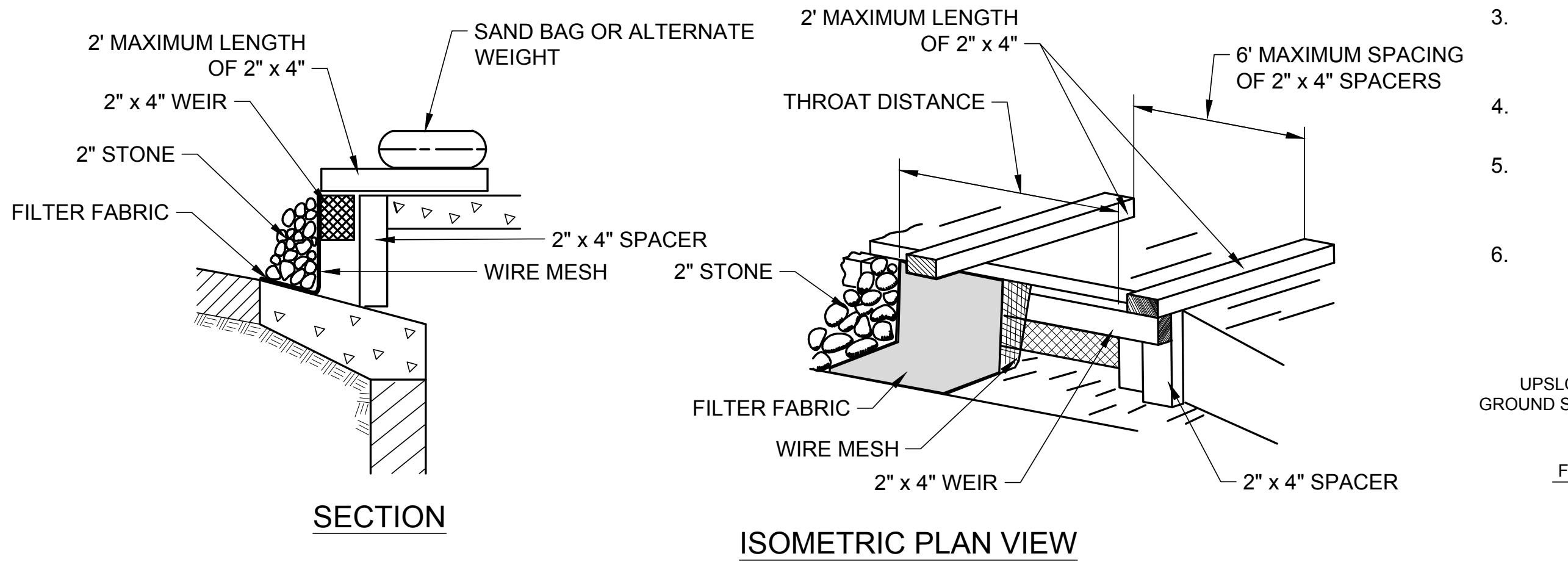
2' MAXIMUM LENGTH OF 2" x 4"
SAND BAG OR ALTERNATE WEIGHT
2" x 4" WEIR
2" STONE
FILTER FABRIC
2" x 4" SPACER
WIRE MESH
SECTION
2' MAXIMUM LENGTH OF 2" x 4"
THROAT DISTANCE
6' MAXIMUM SPACING OF 2" x 4" SPACERS
2" STONE
FILTER FABRIC
WIRE MESH
2" x 4" WEIR
2" x 4" SPACER
ISOMETRIC PLAN VIEW

CURB DROP INLET PROTECTION

NOT TO SCALE

STANDARD SYMBOL

1. FILTER FABRIC SHALL HAVE AN AOS OF 40-85.
2. WOODEN FRAME SHALL BE CONSTRUCTED OF 2" x 4" CONSTRUCTION GRADE LUMBER.
3. WIRE MESH ACROSS THROAT SHALL BE A CONTINUOUS PIECE 30 INCH MINIMUM WIDTH WITH A LENGTH 4 FEET LONGER THAN THE THROAT. IT SHALL BE SHAPED AND SECURELY NAILED TO A 2" x 4" WEIR.
4. THE WEIR SHALL BE SECURELY NAILED TO 2" x 4" SPACERS 9 INCHES LONG SPACED NO MORE THAN 6 FEET APART.
5. THE ASSEMBLY SHALL BE PLACED AGAINST THE INLET AND SECURED BY 2" x 4" ANCHORS 2 FEET LONG EXTENDING ACROSS THE TOP OF THE INLET AND HELD IN PLACE BY SANDBAGS OR ALTERNATE WEIGHTS.
6. MAXIMUM DRAINAGE AREA 1 ACRE.

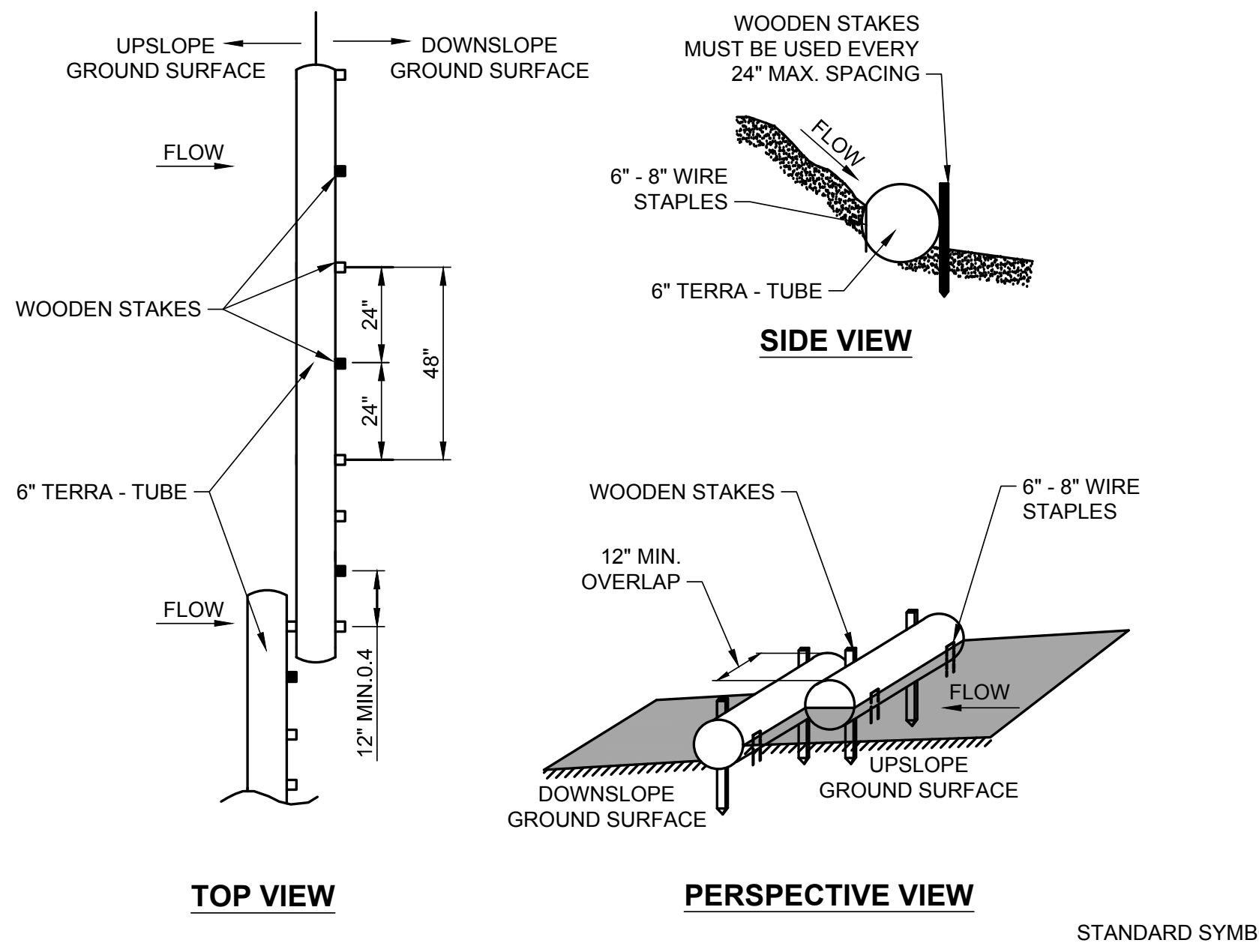
UPSLOPE GROUND SURFACE
DOWNSLOPE GROUND SURFACE
FLOW
WOODEN STAKES
24"
24"
48"
6" TERRA - TUBE
FLOW
12" MIN.0.4
TOP VIEW
WOODEN STAKES MUST BE USED EVERY 24" MAX. SPACING
FLOW
6" - 8" WIRE STAPLES
6" TERRA - TUBE
SIDE VIEW
WOODEN STAKES
6" - 8" WIRE STAPLES
12" MIN. OVERLAP
FLOW
DOWNSLOPE GROUND SURFACE
UPSLOPE GROUND SURFACE
PERSPECTIVE VIEW

STANDARD SYMBOL

TERRA TUBE DETAIL

NOT TO SCALE

1. INSTALL TERRA-TUBES PRIOR TO ANY SEEDING.
2. REMOVE ALL OBSTRUCTIONS LARGER THAN 1"-2" IN DIAMETER.
3. ANCHOR UPSLOPE SIDE USING 6"-8" U-SHAPED WIRE STAPLES OR APPROVED DEVICE EVERY 1'. POSITION ANCHORS 1" INWARD FROM UPPER EDGE OF DEVICE, DRIVE FLUSH TO SOIL.
4. BACKFILL AND COMPACT LOOSE SOIL AGAINST UPSLOPE SIDE.
5. OVERLAP ADJACENT TUBES BY A MINIMUM OF 1'. REDUCE STAKE INTERVAL ON DOWNSLOPE SIDE TO 1' INTERVAL MAKING SURE TO PLACE A STAKE AT THE END OF THE TUBES.
6. REFER TO MANUFACTURERS' INSTALLATION GUIDE FOR ADDITIONAL INFORMATION.

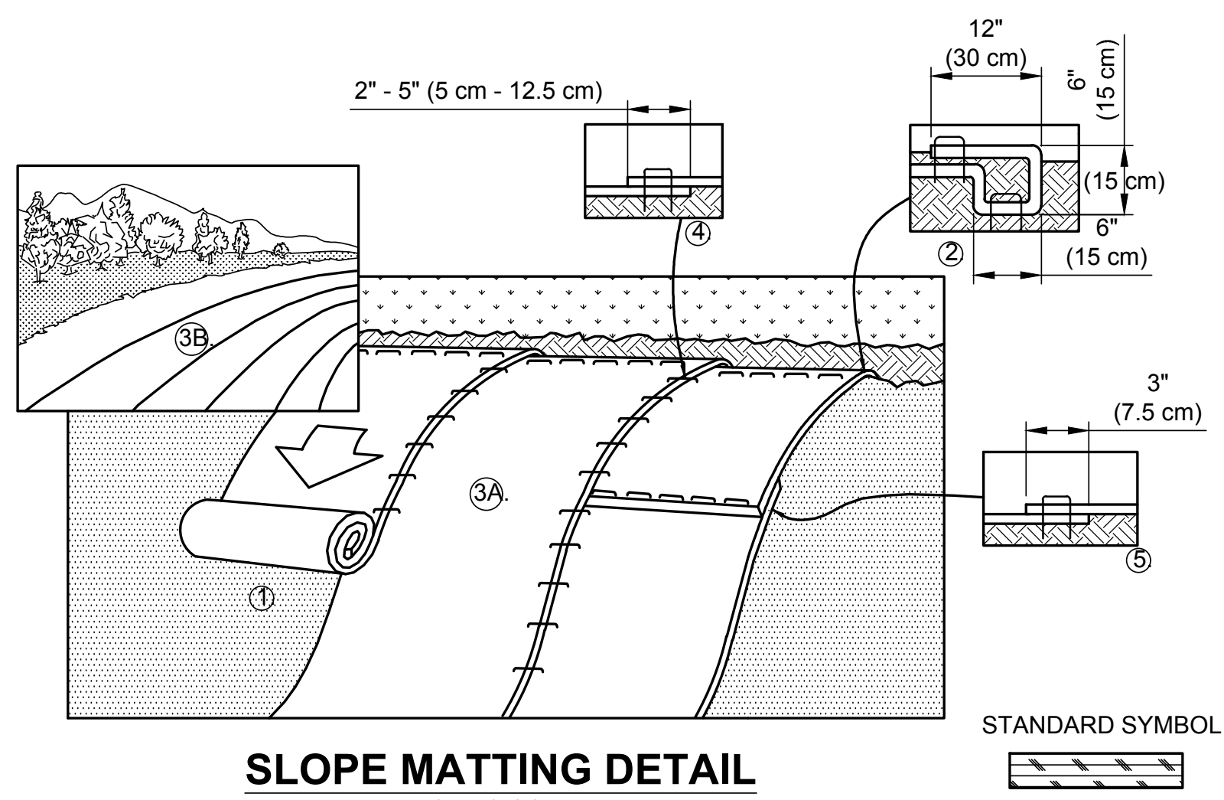
2" - 5" (5 cm - 12.5 cm)
12" (30 cm)
6" (15 cm)
(15 cm)
6" (15 cm)
④
②
③B
③A
①
3" (7.5 cm)
⑤
STANDARD SYMBOL

SLOPE MATTING DETAIL

NOT TO SCALE

1. PREPARE SOIL BEFORE INSTALLING ROLLED EROSION CONTROL PRODUCTS (RECP's), INCLUDING ANY NECESSARY APPLICATION OF LIME, FERTILIZER, AND SEED. NOTE: WHEN USING CELL-O-SEED DO NOT SEED PREPARED AREA. CELL-O-SEED MUST BE INSTALLED WITH PAPER SIDE DOWN.
2. BEGIN AT THE TOP OF THE SLOPE BY ANCHORING THE RECP's IN A 6" (15 CM) DEEP X 6" (15 CM) WIDE TRENCH WITH APPROXIMATELY 12" (30cm) OF RECP's EXTENDED BEYOND THE UP-SLOPE PORTION OF THE TRENCH. ANCHOR THE RECP's WITH A ROW OF STAPLES/STAKES APPROXIMATELY 12" (30 CM) APART IN THE BOTTOM OF THE TRENCH. BACKFILL AND COMPACT THE TRENCH AFTER STAPLING. APPLY SEED TO COMPACTED SOIL AND FOLD REMAINING 12" (30 CM) PORTION OF RECP's BACK OVER SEED AND COMPACTED SOIL. SECURE RECP's OVER COMPACTED SOIL WITH A ROW OF STAPLES/STAKES SPACED APPROXIMATELY 12" (30 CM) APART ACROSS THE WIDTH OF THE RECP's.
3. ROLL THE RECP's (A.) DOWN OR (B.) HORIZONTALLY ACROSS THE SLOPE. RECP's WILL UNROLL WITH APPROPRIATE SIDE AGAINST THE SOIL SURFACE. ALL RECP's MUST BE SECURELY FASTENED TO SOIL SURFACE BY PLACING STAPLES/STAKES IN APPROPRIATE LOCATIONS AS SHOWN IN THE STAPLE PATTERN GUIDE. WHEN USING THE DOT SYSTEM , STAPLES/STAKES SHOULD BE PLACED THROUGH EACH OF THE COLORED DOTS CORRESPONDING TO THE APPROPRIATE STAPLE PATTERN.
4. THE EDGES OF PARALLEL RECP's MUST BE STAPLED WITH APPROXIMATELY 2" - 5" (5 CM - 12.5 CM) OVERLAP DEPENDING ON RECP's TYPE.
5. CONSECUTIVE RECP's SPLICED DOWN THE SLOPE MUST BE PLACED END OVER END (SHINGLE STYLE) WITH AN APPROXIMATE 3" (7.5 CM) OVERLAP. STAPLE THROUGH OVERLAPPED AREA, APPROXIMATELY 12" (30 CM) APART ACROSS ENTIRE RECP's WIDTH.
6. IN LOOSE SOIL CONDITIONS, THE USE OF STAPLE OR STAKE LENGTHS GREATER THAN 6" (15 CM) MAY BE NECESSARY TO PROPERLY SECURE THE RECP's.

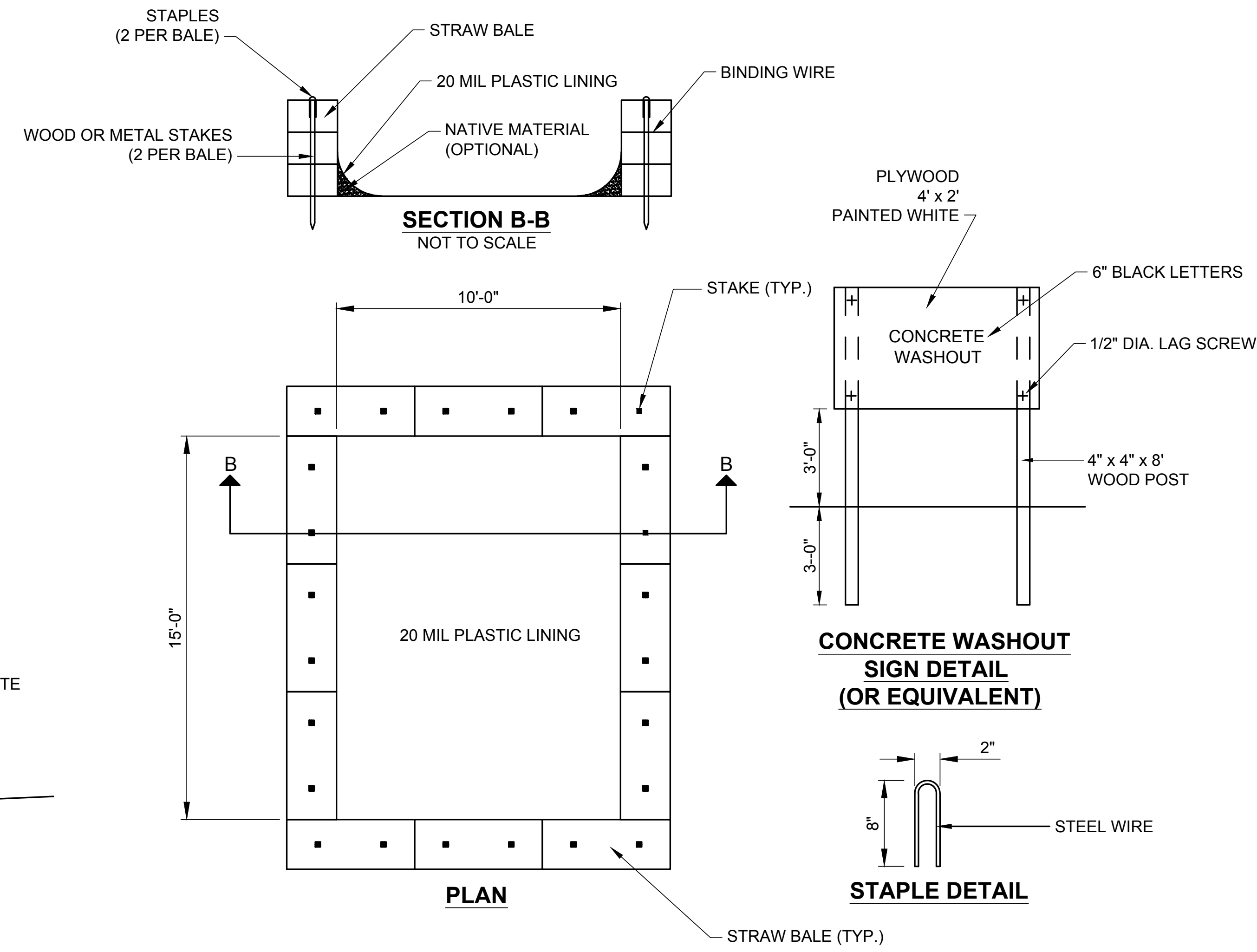
STAPLES (2 PER BALE)
STRAW BALE
20 MIL PLASTIC LINING
BINDING WIRE
WOOD OR METAL STAKES (2 PER BALE)
NATIVE MATERIAL (OPTIONAL)
SECTION B-B
NOT TO SCALE
10'-0"
STAKE (TYP.)
B
B
15'-0"
20 MIL PLASTIC LINING
PLAN
STRAW BALE (TYP.)
PLYWOOD 4' x 2' PAINTED WHITE
6" BLACK LETTERS
CONCRETE WASHOUT
1/2" DIA. LAG SCREWS
4" x 4" x 8' WOOD POST
3'-0"
3'-0"
CONCRETE WASHOUT SIGN DETAIL (OR EQUIVALENT)
2"
8"
STEEL WIRE
STAPLE DETAIL

TEMPORARY STRAW BALE CONCRETE WASHOUT DETAIL

NOT TO SCALE

STANDARD SYMBOL

NOTES:
1. WASHOUT AREA SHALL BE A MINIMUM OF 50' FROM STORM DRAIN INLETS, OPEN DRAINAGE FACILITIES AND WATER COURSES.
2. ONCE CONCRETE WASTES ARE WASHED INTO DESIGNATED AREAS AND ALLOWED TO HARDEN, THE CONCRETE SHOULD BE BROKEN UP, REMOVED AND DISPOSED OF IN ACCORDANCE WITH ALL LOCAL, COUNTY, AND STATE REGULATIONS.
3. THE CONCRETE WASHOUT SIGN SHALL BE INSTALLED WITHIN 20' OF TEMPORARY WASHOUT FACILITY.

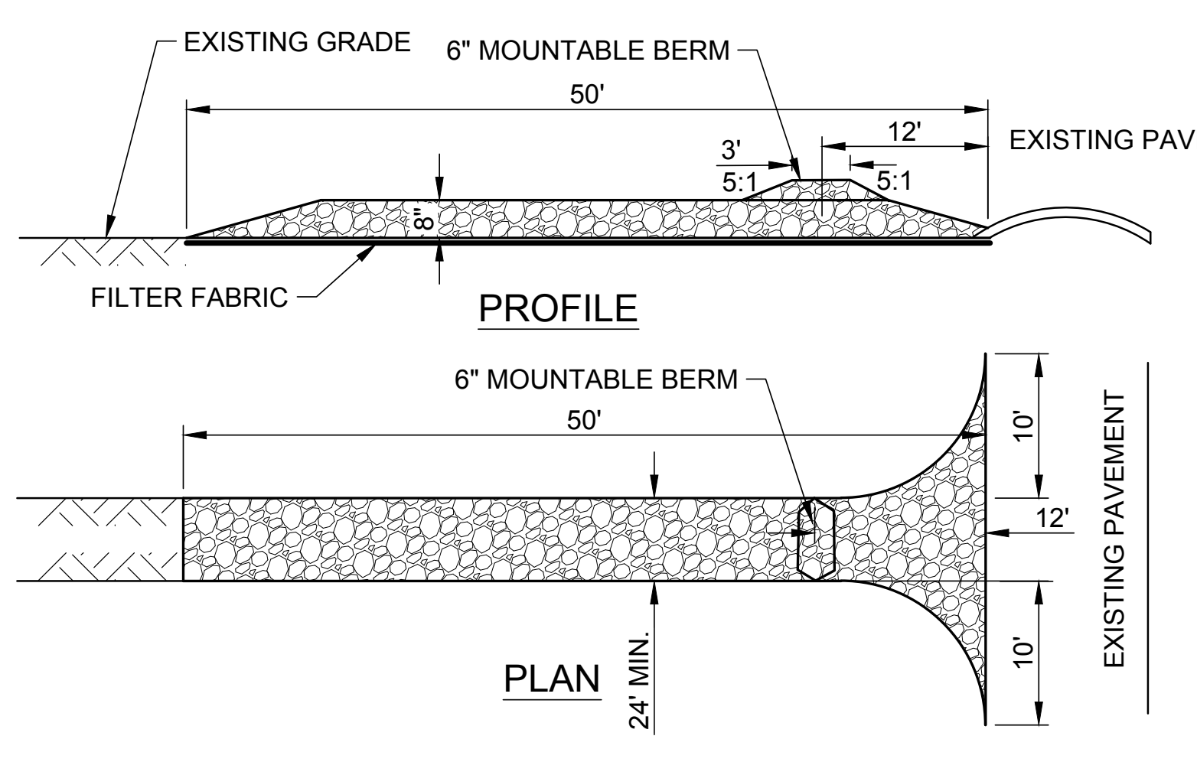
EXISTING GRADE
6" MOUNTABLE BERM
50'
3'
5:1
12'
5:1
EXISTING PAVEMENT
8"
FILTER FABRIC
PROFILE
6" MOUNTABLE BERM
50'
10'
12'
10'
EXISTING PAVEMENT
24' MIN.
PLAN

STABILIZED CONSTRUCTION ENTRANCE DETAIL

NOT TO SCALE

STANDARD SYMBOL

NOTES
1. STONE SIZE - USE 2" STONE.
2. LENGTH - NOT LESS THAN 50 FEET .
3. THICKNESS - NOT LESS THAN EIGHT (8) INCHES.
4. WIDTH - TWENTY FOUR (24) FOOT MINIMUM, BUT NOT LESS THAN THE FULL WIDTH AT POINTS WHERE INGRESS OR EGRESS OCCURS.
5. FILTER CLOTH - WILL BE PLACED OVER THE ENTIRE AREA PRIOR TO PLACING OF STONE.
6. SURFACE WATER - ALL SURFACE WATER FLOWING OR DIVERTED TOWARD CONSTRUCTION ENTRANCES SHALL BE PIPED ACROSS THE ENTRANCE. IF PIPING IS IMPRACTICAL, A MOUNTABLE BERM WITH 5:1 SLOPES WILL BE PERMITTED.
7. MAINTENANCE - THE ENTRANCE SHALL BE MAINTAINED IN A CONDITION WHICH WILL PREVENT TRACKING OR FLOWING OF SEDIMENT ONTO PUBLIC RIGHTS-OF-WAY. ALL SEDIMENT SPILLED,DROPPED, WASHED OR TRACTED ONTO PUBLIC RIGHTS- OF-WAY MUST BE REMOVED IMMEDIATELY.
8. WHEN WASHING IS REQUIRED. IT SHALL BE DONE ON AN AREA STABILIZED WITH STONE AND WHICH DRAINS INTO AN APPROVED SEDIMENT TRAPPING DEVICE.
9. PERIODIC INSPECTION AND NEEDED MAINTENANCE SHALL BE PROVIDED AFTER EACH RAIN.

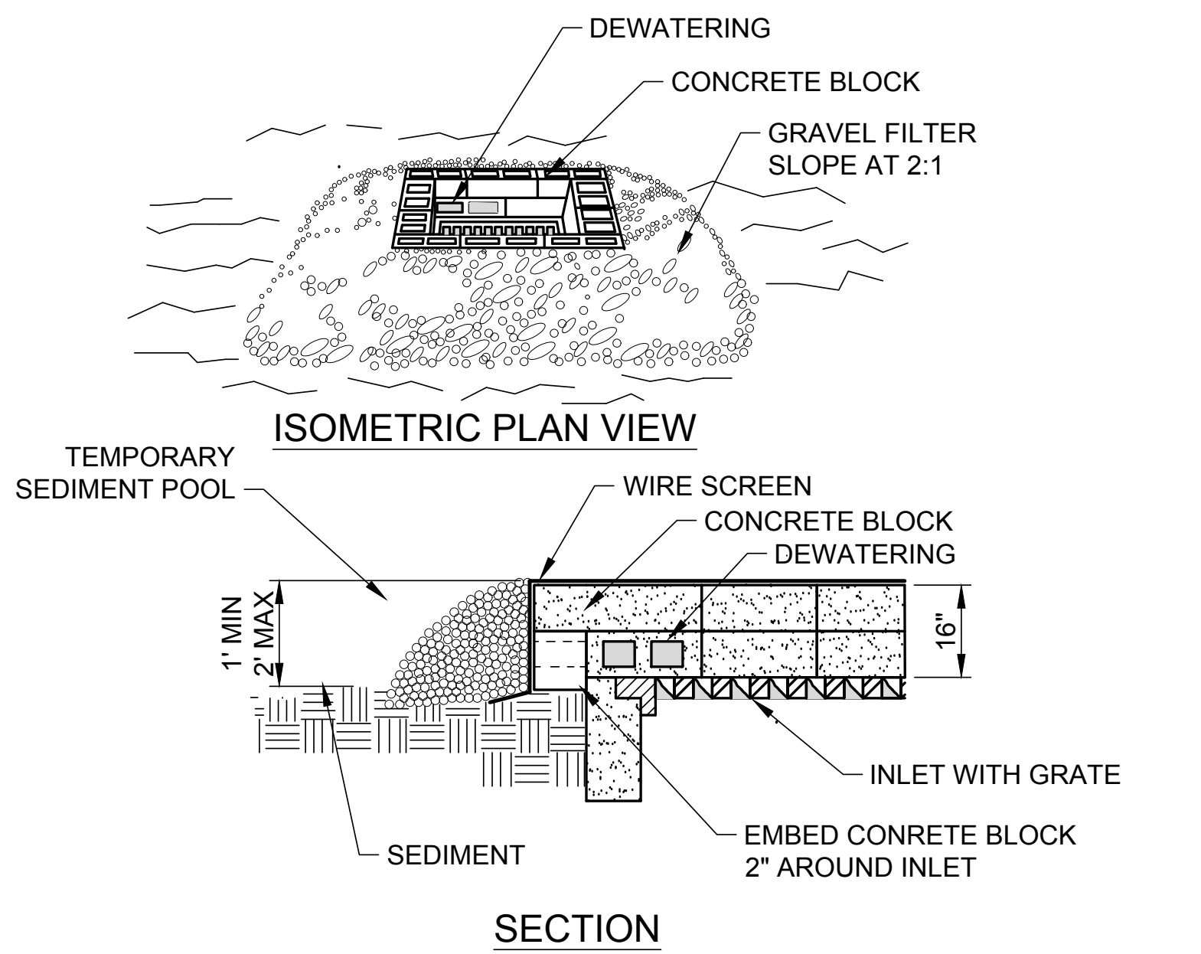
DEWATERING
CONCRETE BLOCK
GRAVEL FILTER SLOPE AT 2:1
ISOMETRIC PLAN VIEW
TEMPORARY SEDIMENT POOL
WIRE SCREEN
CONCRETE BLOCK
DEWATERING
1' MIN
2' MAX
16"
INLET WITH GRATE
SEDIMENT
EMBED CONRETE BLOCK 2" AROUND INLET
SECTION

STONE AND BLOCK INLET PROTECTION DETAIL

NOT TO SCALE

STANDARD SYMBOL

NOTES
1. LAY ONE BLOCK ON EACH SIDE OF THE STRUCTURE ON ITS SIDE FOR DEWATERING. FOUNDATION SHALL BE 2 INCHES MINIMUM BELOW REST OF INLET AND BLOCKS SHALL BE PLACED AGAINST INLET FOR SUPPORT.
2. HARDWARE CLOTH OR 1/2" WIRE MESH SHALL BE PLACED OVER BLOCK OPENINGS TO SUPPORT STONE.
3. USE CLEAN STONE OR GRAVEL 1/2-3/4 INCH IN DIAMETER PLACED 2 INCHES BELOW TOP OF THE BLOCK ON A 2:1 SLOPE OR FLATTER.
4. FOR STONE STRUCTURES ONLY, A 1 FOOT THICK LAYER OF THE FILTER STONE WILL BE PLACED AGAINST THE 3 INCH STONE AS SHOWN ON THE DRAWINGS.
5. MAXIMUM DRAINAGE AREA - 1 ACRE

DUST CONTROL NOTES

DEFINITION
THE CONTROL OF DUST RESULTING FROM LAND-DISTURBING ACTIVITIES.

PURPOSE
TO PREVENT SURFACE AND AIR MOVEMENT OF DUST FROM DISTURBED SOIL SURFACES THAT MAY CAUSE OFF-SITE DAMAGE, HEALTH HAZARDS AND TRAFFIC SAFETY PROBLEMS.

CONDITIONS WHERE PRACTICE APPLIES
ON CONSTRUCTION ROADS, ACCESS POINTS, AND OTHER DISTURBED AREAS SUBJECT TO SURFACE DUST MOVEMENT AND DUST BLOWING WHERE OFF-SITE DAMAGE MAY OCCUR IF DUST IS NOT CONTROLLED.

DESIGN CRITERIA
CONSTRUCTION OPERATIONS SHOULD BE SCHEDULED TO MINIMIZE THE AMOUNT OF AREA DISTURBED AT ONE TIME. BUFFER AREAS OF VEGETATION SHOULD BE LEFT WHERE PRACTICAL. TEMPORARY OR PERMANENT STABILIZATION MEASURES SHOULD BE INSTALLED. NO SPECIFIC DESIGN CRITERIA ARE GIVEN; SEE CONSTRUCTION SPECIFICATIONS BELOW FOR COMMON METHODS OF DUST CONTROL.

WATER QUALITY MUST BE CONSIDERED WHEN MATERIALS ARE SELECTED FOR DUST CONTROL. WHERE THERE IS POTENTIAL FOR THE MATERIAL TO WASH OFF TO A STREAM OR WATER BODY, INGREDIENT INFORMATION MUST BE PROVIDED TO THE LOCAL PERMITTING AUTHORITY.

CONSTRUCTION SPECIFICATIONS

A. NON-DRIVING AREAS - THESE AREAS USE PRODUCTS AND MATERIALS APPLIED OR PLACED ON SOIL SURFACES TO PREVENT AIRBORNE MIGRATION OF SOIL PARTICLES.

VEGETATIVE COVER - FOR DISTURBED AREAS NOT SUBJECT TO TRAFFIC; VEGETATION PROVIDES THE MOST PRACTICAL METHOD OF DUST CONTROL. TEMPORARY SEEDING SHALL BE AS FOLLOWS:

RYE GRASS (ANNUAL OR PERENNIAL) AT 30 LBS. PER ACRE (0.7 LBS./1,000 S.F.)

CERTIFIED "AROOSTOOK" WINTER RYE (CEREAL RYE) AT 100 LBS. PER ACRE (2.5 LBS./S.F.)

USE WINTER RYE IF SEEDING IN OCTOBER / NOVEMBER.

MULCH (INCLUDING GRAVEL MULCH) - MULCH OFFERS A FAST, EFFECTIVE MEANS OF CONTROLLING DUST. THIS CAN ALSO INCLUDE ROLLED EROSION CONTROL BLANKETS.

SPRAY ADHESIVES - THESE ARE PRODUCTS GENERALLY COMPOSED OF POLYMERS IN A LIQUID OR SOLID FORM THAT ARE MIXED WITH WATER TO FORM AN EMULSION THAT IS SPRAYED ON THE SOIL SURFACE WITH TYPICAL HYDROSEEDING EQUIPMENT. THE MIXING RATIOS AND APPLICATION RATES WILL BE IN ACCORDANCE WITH THE MANUFACTURER'S RECOMMENDATIONS FOR THE SPECIFIC SOILS ON THE SITE. IN NO CASE SHOULD THE APPLICATION OF THESE ADHESIVES BE MADE ON WET SOILS OR IF THERE IS A PROBABILITY OF PRECIPITATION WITHIN 48 HOURS OF ITS PROPOSED USE. MATERIAL SAFETY DATA SHEETS WILL BE PROVIDED TO ALL APPLICATORS AND OTHERS WORKING WITH THE MATERIAL.

EXAMPLES OF SPRAY ADHESIVES FOR USE ON MINERAL SOILS ARE SHOWN IN THE FOLLOWING TABLE.

MATERIAL	WATER DILUTION	TYPE OF NOZZLE	APPLY GALLONS ACRE
ACRYLIC POLYMER	9:1	COURSE SPRAY	500
LATEX EMULSION	12.5:1	FINE SPRAY	235
RESIN IN WATER	4:1	FINE SPRAY	300

B. DRIVING AREAS - THESE AREAS UTILIZE WATER, POLYMER EMULSIONS AND BARRIERS TO PREVENT DUST MOVEMENT FROM THE TRAFFIC SURFACE INTO THE AIR.

SPRINKLING - THIS SITE MAY BE SPRAYED UNTIL THE SURFACE IS WET. THIS IS ESPECIALLY EFFECTIVE ON HAUL ROADS AND ACCESS ROUTES.

POLYMER ADDITIVES - THESE POLYMERS ARE MIXED WITH WATER AND APPLIED TO THE DRIVING SURFACE BY A WATER TRUCK WITH A GRAVITY FEED DRIP BAR, SPRAY BAR OR AUTOMATED DISTRIBUTOR TRUCK. THE MIXING RATIOS AND APPLICATION RATES WILL BE IN ACCORDANCE WITH THE MANUFACTURER'S RECOMMENDATIONS. INCORPORATION OF THE EMULSION INTO THE SOIL WILL BE DONE TO THE APPROPRIATE DEPTH BASED ON EXPECTED TRAFFIC. COMPACTION AFTER INCORPORATION WILL BE BY VIBRATORY ROLLER TO A MINIMUM OF 95%. THE PREPARED SURFACE SHALL BE MOIST AND NO APPLICATION OF THE POLYMER WILL BE MADE IF THERE IS A PROBABILITY OF PRECIPITATION WITHIN 48 HOURS OF ITS PROPOSED USE. MATERIAL SAFETY DATA SHEETS WILL BE PROVIDED TO ALL APPLICATORS WORKING WITH THE MATERIAL.

BARRIERS - WOVEN GEOTEXTILES CAN BE PLACED ON THE DRIVING SURFACE TO EFFECTIVELY REDUCE DUST THROW AND PARTICLE MIGRATION ON HAUL ROADS. STONE CAN ALSO BE USED FOR CONSTRUCTION ROADS FOR EFFECTIVE DUST CONTROL.

WINDBREAK - A SILT FENCE OR SIMILAR BARRIER CAN CONTROL AIR CURRENTS AT INTERVALS EQUAL TO TEN TIMES THE BARRIER HEIGHT. PRESERVE EXISTING WIND BARRIER VEGETATION AS MUCH AS PRACTICAL.

MAINTENANCE
MAINTAIN DUST CONTROL MEASURES THROUGH DRY WEATHER PERIODS UNTIL ALL DISTURBED AREAS ARE STABILIZED.

EROSION CONTROL NOTES

1. A - EXISTING VEGETATION TO REMAIN SHALL BE PROTECTED AND REMAIN UNDISTURBED.
   B - CLEARING AND GRADING SHALL BE SCHEDULED SO AS TO MINIMIZE THE SIZE OF EXPOSED AREAS AND THE LENGTH OF TIME THAT AREAS ARE EXPOSED.
   C - THE LENGTH AND STEEPNESS OF CLEARED SLOPES SHALL BE MINIMIZED TO REDUCE RUN-OFF VELOCITIES.
   D - RUN-OFF SHALL BE DIVERTED AWAY FROM CLEARED SLOPES.
   E - SEDIMENT SHALL BE TRAPPED ON-SITE.
2. SPECIFIC METHODS AND MATERIALS EMPLOYED IN THE INSTALLATION AND MAINTENANCE OF EROSION CONTROL MEASURES SHALL CONFORM TO THE NEW YORK GUIDELINES FOR EROSION AND SEDIMENT CONTROL, LATEST EDITION.
3. SEDIMENT BARRIERS (SILT FENCES, HAY BALES OR APPROVED EQUAL) SHALL BE INSTALLED AS REQUIRED ALONG LIMITS OF DISTURBANCE FOR THE DURATION OF THE WORK. NO SEDIMENT FROM THE SITE SHALL BE PERMITTED TO WASH ON TO ADJACENT PROPERTIES, WETLANDS OR ROADS.
4. GRADED AND STRIPPED AREAS AND STOCKPILES SHALL BE KEPT STABILIZED THROUGH THE USE OF TEMPORARY SEEDING AS REQUIRED. SEED MIXTURE SHALL BE IN ACCORDANCE WITH SOIL CONSERVATION SERVICE RECOMMENDATIONS.
5. DRAINAGE INLETS INSTALLED AS PART OF THE PROJECT SHALL BE PROTECTED FROM SEDIMENT BUILD-UP THROUGH THE USE OF SEDIMENT BARRIERS, SEDIMENT TRAPS, ETC., AS REQUIRED.
6. INSPECTION AND MAINTENANCE OF EROSION CONTROL MEASURES IS TO BE PERFORMED DAILY BY CONTRACTOR PRIOR TO THE START OF CONSTRUCTION FOR THE DAY AND AFTER HEAVY OR PROLONGED STORMS. MAINTENANCE MEASURES INCLUDE, BUT NOT LIMITED TO, CLEANING OF SEDIMENT BASINS OR TRAPS, CLEANING OR REPAIR OF SEDIMENT BARRIERS, CLEANING AND REPAIR OF BERMS AND DIVERSIONS, AND CLEANING AND REPAIR OF OF INLET PROTECTION.
7. APPROPRIATE MEANS SHALL BE USED TO CONTROL DUST DURING CONSTRUCTION. SEE DUST CONTROL NOTES, THIS SHEET.
8. A STABILIZED CONSTRUCTION ENTRANCE SHALL BE MAINTAINED TO PREVENT SOIL AND LOOSE DEBRIS FROM BEING TRACKED ONTO LOCAL ROADS. THE CONSTRUCTION ENTRANCE SHALL BE MAINTAINED UNTIL THE SITE IS PERMANENTLY STABILIZED.
9. SEDIMENT BARRIERS AND OTHER EROSION CONTROL MEASURES SHALL REMAIN IN PLACE UNTIL UPLAND DISTURBED AREAS ARE PERMANENTLY STABILIZED. AFTER PERMANENT STABILIZATION, PAVED AREAS SHALL BE CLEANED AND DRAINAGE SYSTEM FLUSHED AS NECESSARY.
10. DURING THE COURSE OF CONSTRUCTION, CERTAIN EROSION AND SEDIMENT CONTROL MEASURES MAY BECOME NECESSARY TO PREVENT THE TRANSPORT OF SEDIMENT TO OFF-SITE AREAS, PONDS, WATER COURSES, DRAINAGE INLETS, RECHARGE BASINS, ETC. ACTUAL EROSION CONTROL MEASURES WILL BE DICTATED BY FIELD CONDITIONS AS CONSTRUCTION PROGRESSES BUT THE GENERAL CONDITIONS IN NOTES 1 THROUGH 9 SHALL BE OBSERVED.

IT IS A VIOLATION OF NEW YORK STATE EDUCATION LAW ARTICLE 145, PROFESSIONAL ENGINEERING AND LAND SURVEYING, SECTION 7209 FOR ANY PERSON, UNLESS HE IS ACTING UNDER THE DIRECTION OF A LICENSED PROFESSIONAL ENGINEER OR LAND SURVEYOR, TO ALTER AN ITEM IN ANY WAY. IF AN ITEM BEARING THE SEAL OF AN ENGINEER OR LAND SURVEYOR IS ALTERED, THE ALTERING ENGINEER OR LAND SURVEYOR SHALL AFFIX TO THE ITEM HIS SEAL AND NOTATION "ALTERED BY" FOLLOWED BY HIS SIGNATURE AND THE DATE OF SUCH ALTERATION, AND SPECIFIC DESCRIPTION OF THE ALTERATION.

FOR TOWN USE

No.	REVISION	DATE

OWNER
I.H.C.C., INC. AND
ROBERG REVOCABLE TRUST
21 BREEZE HILL ROAD
NORTHPORT, NY, 11768
(631) 261 - 5700

APPLICANT:
THE PRESERVE AT INDIAN HILLS
1 RABRO DRIVE, SUITE 100
HAUPPAUGE, N.Y. 11788
(631) 351 - 4000

THOMAS CHARLES DIXON

SEDIMENT AND EROSION CONTROL DETAILS
FOR
THE PRESERVE AT INDIAN HILLS
SITUATED AT
NORTHPORT
TOWN OF HUNTINGTON, SUFFOLK COUNTY, NEW YORK
S.C.T.M.: DISTRICT: 0400, SECT. 014, BLK. 04, LOTS 1 AND 2
DISTRICT 0400, SECT. 015, BLK. 01, LOTS 3.1, 3.2, 11, 12, 16, 19 AND P/O 22

NELSON + POPE
engineers • architects • surveyors
70 Maxess Road, Melville, NY 11747 • 631.427.5665 • nelsonpope.com

DRAWN BY: GEO	CADD No.: 86047 CSP 2021 DETAILS.DWG	SCALE: NONE	DRAWING NO.: C - 504
CHECKED BY: JM	FILE NO.: 400-014		
DATE: OCTOBER, 2021	PROJECT NO.: 86047		SHEET NO.: 38 OF 44

G:\projects\86047\FINALS\CONDOMINIUM\86047 CSP 2021 DETAILS.dwg, 38 OF 44 SEDIMENT AND EROSION CONTROL DETAILS, 10/11/2021 3:02:29 PM

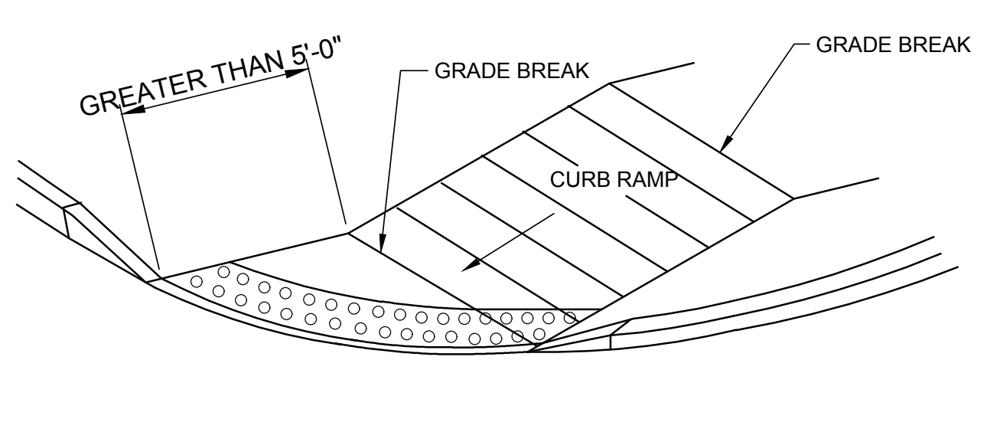
GREATER THAN 5'-0"
GRADE BREAK
GRADE BREAK
CURB RAMP

DETECTABLE WARNING PLACEMENT FOR DETAIL 1

NOT TO SCALE

NOTE:
IF DISTANCE FROM THE GRADE BREAK AT THE BASE OF THE CURB RAMP TO THE ROAD IS GREATER THAN 5'-0", DETECTABLE WARNINGS SHOULD BE PLACED ALONG THE RADIUS OF THE CURVE AS SHOWN IN THE ABOVE DETAIL.

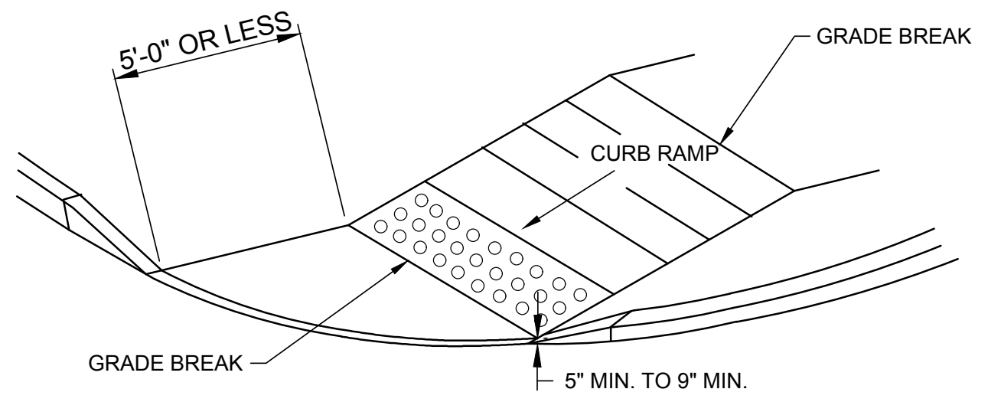
5'-0" OR LESS
GRADE BREAK
CURB RAMP
GRADE BREAK
5" MIN. TO 9" MIN.

DETECTABLE WARNING PLACEMENT FOR DETAIL 2

NOT TO SCALE

NOTE:
IF DISTANCE FROM THE GRADE BREAK AT THE BASE OF THE CURB RAMP TO THE ROAD IS 5'-0" OR LESS, DETECTABLE WARNINGS SHOULD BE PLACED ON THE CURB RAMP ALONG THE BOTTOM GRADE BREAK WITH ONE CORNER 5" TO 9" FROM THE FRONT OF THE CURB OR EDGE OF THE ROADWAYS AS SHOWN IN THE ABOVE DETAIL.

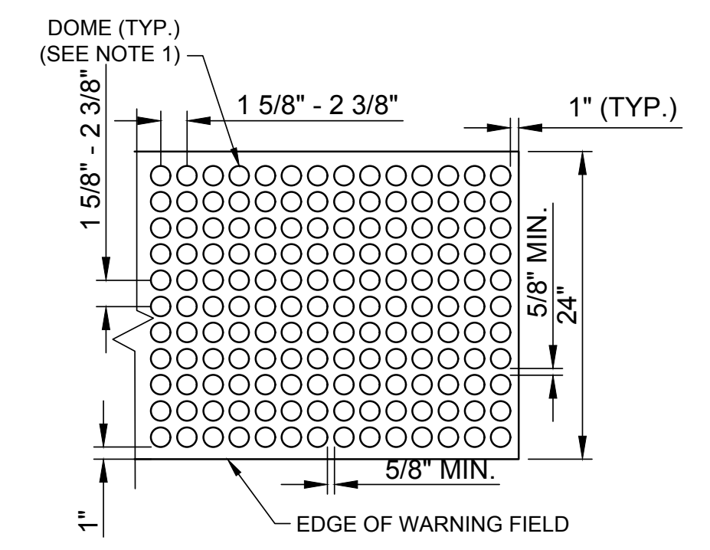
DOME (TYP.)
(SEE NOTE 1)
1 5/8" - 2 3/8"
1 5/8" - 2 3/8"
1" (TYP.)
5/8" MIN.
24"
5/8" MIN.
1"
EDGE OF WARNING FIELD

DOME SPACING

NOT TO SCALE

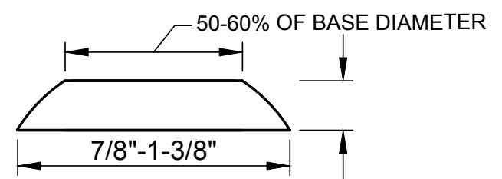
50-60% OF BASE DIAMETER
7/8"-1-3/8"
3/16"

DOME SECTION

DETECTABLE WARNING DETAILS

NOT TO SCALE

DETECTABLE WARNING NOTES:

1. THE DETAILS PROVIDED ARE NOT DRAWN TO SCALE. THE QUANTITY OF DOMES DEPICTED ON THE DETECTABLE WARNING FIELD (THE DOMES AND THE ENTIRE 24" LEVEL SURFACE) IS FOR ILLUSTRATION ONLY.
2. THE SIZE OF THE DETECTABLE WARNING FIELD SHALL BE 24" IN THE DIRECTION OF TRAVEL AND SHALL EXTEND THE FULL WIDTH OF THE CURB RAMP OR FLUSH SURFACE, EXCLUSIVE OF SIDE FLARES.
3. THE ROWS OF DOMES SHALL BE ALIGNED TO BE PERPENDICULAR OR RADIAL TO THE GRADE BREAK BETWEEN THE RAMP LANDING OR CURB RAMP AND THE STREET.
4. WHERE DOMES ARE ARRAYED RADIALLY THEY MAY DIFFER IN DOME DIAMETER AND CENTER-TO-CENTER SPACING WITHIN THE RANGES SHOWN IN THE DETAILS.
5. THE DETECTABLE WARNING FIELD COLOR SHALL CONTRAST VISUALLY WITH ADJACENT WALKING SURFACES EITHER LIGHT-ON-DARK OR DARK-ON-LIGHT.
6. DETECTABLE WARNINGS SHALL BE LOCATED SO THAT THE EDGE (OR ON CURB RAMP TYPE D AT LEAST ONE CORNER) OF THE WARNING FIELD NEAREST TO THE ROADWAY IS 5" TO 9" FROM THE FRONT OF THE CURB OR THE EDGE OF ROADWAY.

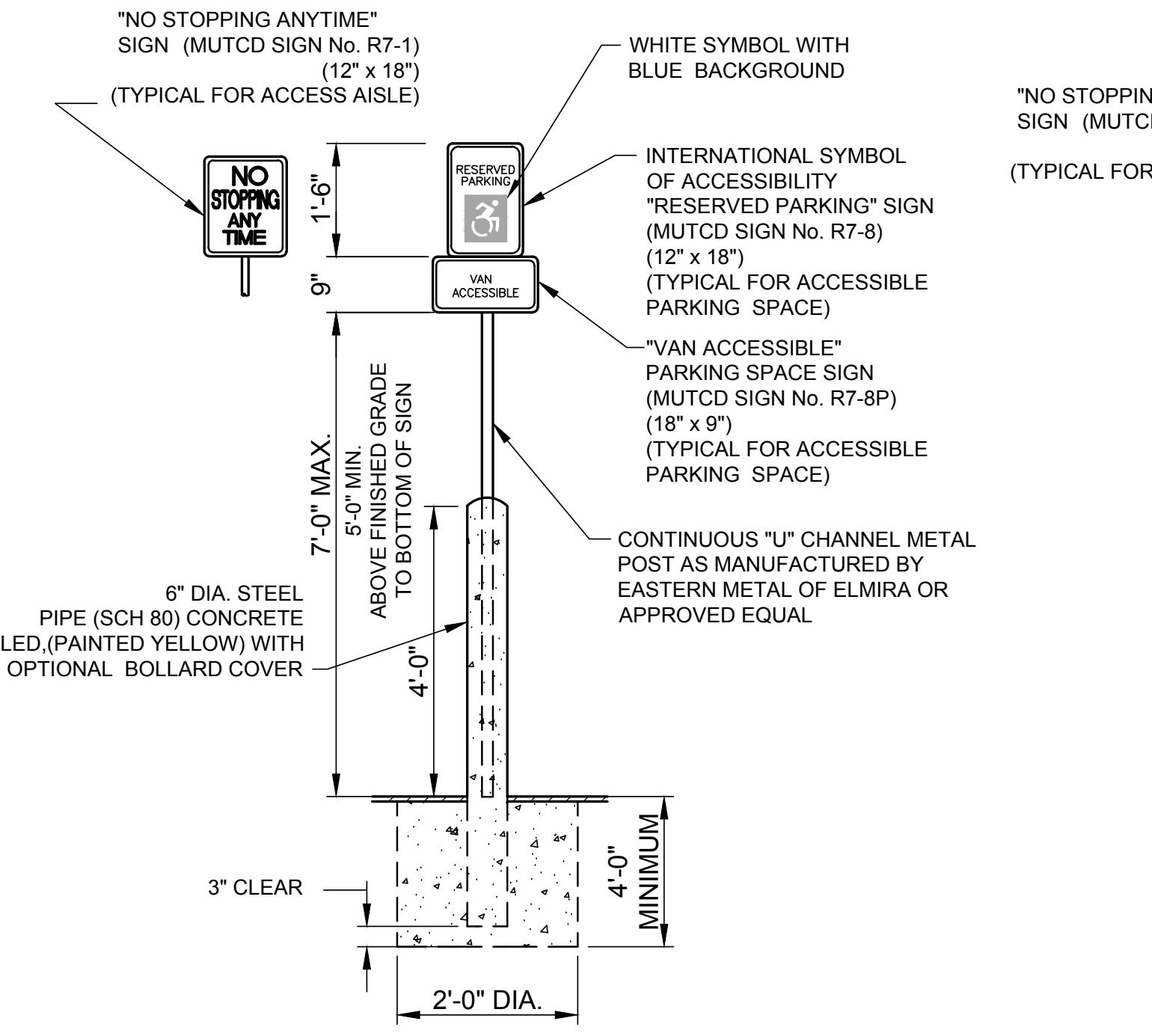
"NO STOPPING ANYTIME" SIGN (MUTCD SIGN No. R7-1) (12" x 18") (TYPICAL FOR ACCESS AISLE)
NO STOPPING ANY TIME
WHITE SYMBOL WITH BLUE BACKGROUND
RESERVED PARKING
INTERNATIONAL SYMBOL OF ACCESSIBILITY "RESERVED PARKING" SIGN (MUTCD SIGN No. R7-8) (12" x 18") (TYPICAL FOR ACCESSIBLE PARKING SPACE)
VAN ACCESSIBLE
"VAN ACCESSIBLE" PARKING SPACE SIGN (MUTCD SIGN No. R7-8P) (18" x 9") (TYPICAL FOR ACCESSIBLE PARKING SPACE)
1'-6"
9"
7'-0" MAX.
5'-0" MIN. ABOVE FINISHED GRADE TO BOTTOM OF SIGN
CONTINUOUS "U" CHANNEL METAL POST AS MANUFACTURED BY EASTERN METAL OF ELMIRA OR APPROVED EQUAL
6" DIA. STEEL PIPE (SCH 80) CONCRETE FILLED,(PAINTED YELLOW) WITH OPTIONAL BOLLARD COVER
4'-0"
3" CLEAR
4'-0" MINIMUM
2'-0" DIA.

ACCESSIBLE PARKING SPACE AND ACCESS AISLE SIGN WITH BOLLARD DETAIL

NOT TO SCALE

NOTE:
SIGNS LOCATED WHERE THEY MAY BE HIT BY VEHICLES BEING PARKED SHALL BE INSTALLED WITH BOLLARD PROTECTION.

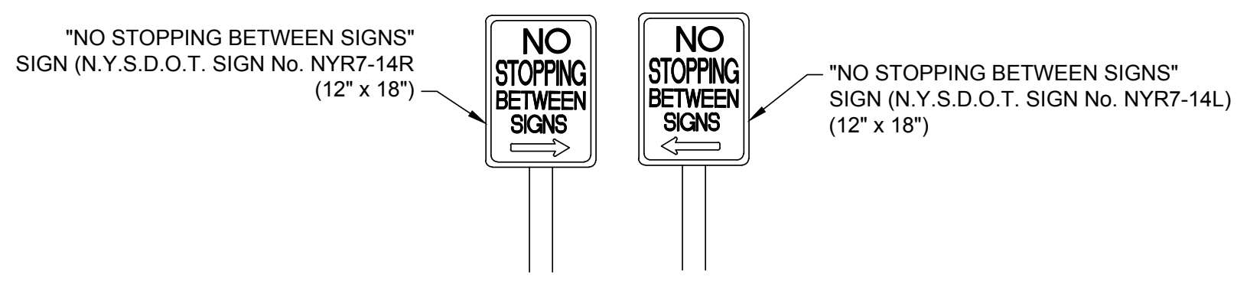
"NO STOPPING BETWEEN SIGNS" SIGN (N.Y.S.D.O.T. SIGN No. NYR7-14R (12" x 18")
NO STOPPING BETWEEN SIGNS
NO STOPPING BETWEEN SIGNS
"NO STOPPING BETWEEN SIGNS" SIGN (N.Y.S.D.O.T. SIGN No. NYR7-14L) (12" x 18")

ALTERNATE ACCESS AISLE SIGN DETAIL

NOT TO SCALE

ACCESSIBILITY DETAILS II

24 x 36

IT IS A VIOLATION OF NEW YORK STATE EDUCATION LAW ARTICLE 145, PROFESSIONAL ENGINEERING AND LAND SURVEYING, SECTION 7209 FOR ANY PERSON, UNLESS HE IS ACTING UNDER THE DIRECTION OF A LICENSED PROFESSIONAL ENGINEER OR LAND SURVEYOR, TO ALTER AN ITEM IN ANY WAY. IF AN ITEM BEARING THE SEAL OF AN ENGINEER OR LAND SURVEYOR IS ALTERED, THE ALTERING ENGINEER OR LAND SURVEYOR SHALL AFFIX TO THE ITEM HIS SEAL AND NOTATION "ALTERED BY" FOLLOWED BY HIS SIGNATURE AND THE DATE OF SUCH ALTERATION, AND SPECIFIC DESCRIPTION OF THE ALTERATION.

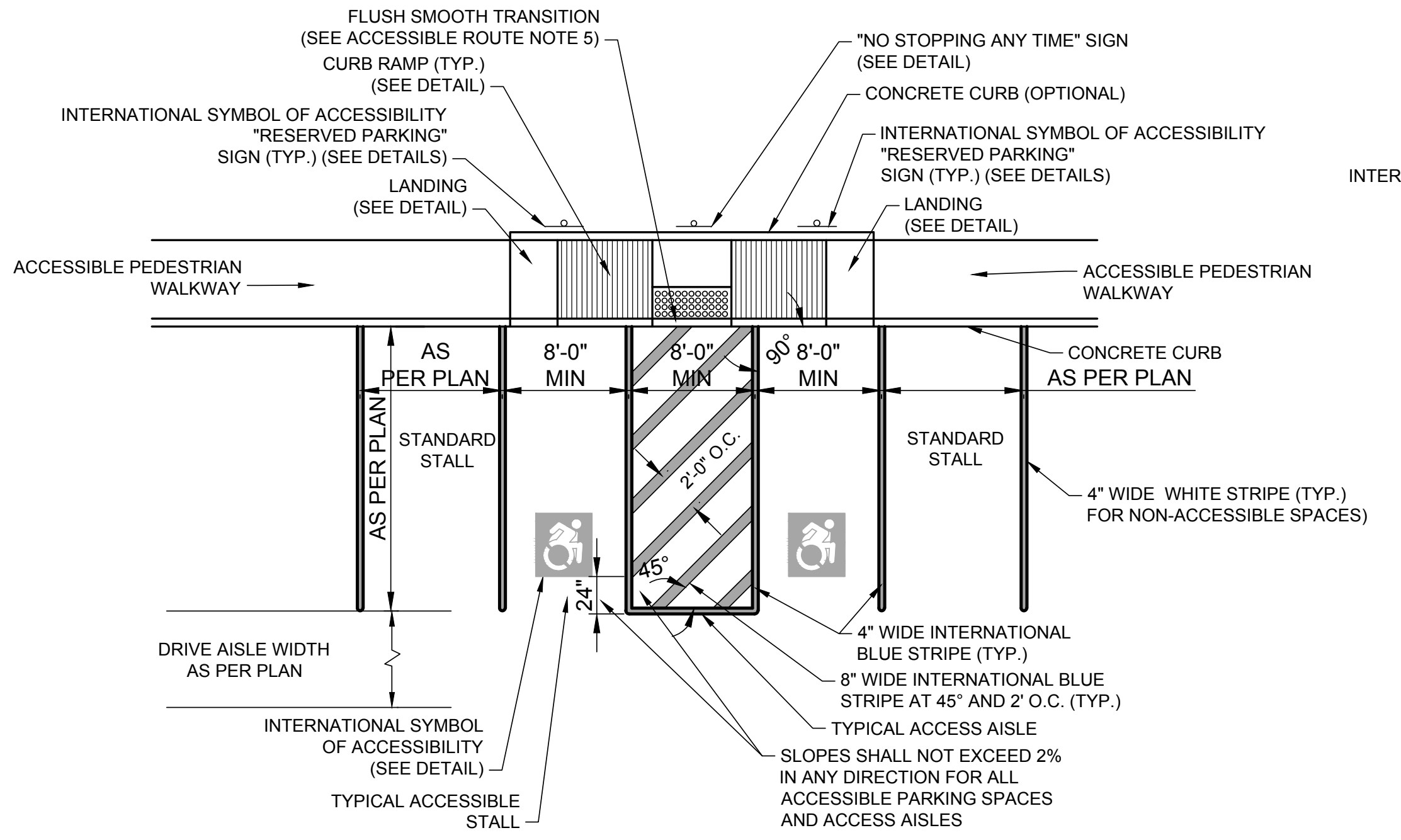
FLUSH SMOOTH TRANSITION (SEE ACCESSIBLE ROUTE NOTE 5)
CURB RAMP (TYP.) (SEE DETAIL)
INTERNATIONAL SYMBOL OF ACCESSIBILITY "RESERVED PARKING" SIGN (TYP.) (SEE DETAILS)
LANDING (SEE DETAIL)
"NO STOPPING ANY TIME" SIGN (SEE DETAIL)
CONCRETE CURB (OPTIONAL)
INTERNATIONAL SYMBOL OF ACCESSIBILITY "RESERVED PARKING" SIGN (TYP.) (SEE DETAILS)
LANDING (SEE DETAIL)
ACCESSIBLE PEDESTRIAN WALKWAY
ACCESSIBLE PEDESTRIAN WALKWAY
CONCRETE CURB
AS PER PLAN
8'-0" MIN
8'-0" MIN
90°
8'-0" MIN
AS PER PLAN
AS PER PLAN
STANDARD STALL
2'-0" O.C.
STANDARD STALL
4" WIDE WHITE STRIPE (TYP.) FOR NON-ACCESSIBLE SPACES)
45°
24"
DRIVE AISLE WIDTH AS PER PLAN
4" WIDE INTERNATIONAL BLUE STRIPE (TYP.)
8" WIDE INTERNATIONAL BLUE STRIPE AT 45° AND 2' O.C. (TYP.)
TYPICAL ACCESS AISLE
SLOPES SHALL NOT EXCEED 2% IN ANY DIRECTION FOR ALL ACCESSIBLE PARKING SPACES AND ACCESS AISLES
INTERNATIONAL SYMBOL OF ACCESSIBILITY (SEE DETAIL)
TYPICAL ACCESSIBLE STALL

TYPICAL ACCESSIBLE PARKING LAYOUT

NOT TO SCALE

NOTES:

1. THE ABOVE DETAIL IS INTENDED TO PROVIDE A TYPICAL ACCESSIBLE PARKING LAYOUT. REFER TO PLAN FOR SPECIFIC LAYOUT OF ACCESSIBLE PARKING, ACCESS AISLE, CURB RAMP TYPES AND LOCATIONS, AND ACCESSIBLE ROUTE.
2. ALL PAVEMENT MARKINGS SHALL RECEIVE TWO COATS OF AN A APPROVED PAINT AND SHALL BE APPLIED TO A MINIMUM WET FILM THICKNESS OF 15 MILS.
3. PAVEMENT MARKINGS SHALL BE PAINTED AS REQUIRED BY THE LOCAL CODE OR SPECIFIED BY THE OWNER. DOUBLE LINE STRIPPING IS REQUIRED WITHIN THE TOWNS OF OYSTER BAY AND HEMPSTEAD.
4. THE PAVEMENT MARKINGS SHALL BE MAINTAINED PERMANENTLY ON THE PAVEMENT SURFACE IN THE LAYOUT SHOWN ON THE APPROVED PLAN.
5. THE WIDTH OF THE STALLS SHOWN SHALL BE MEASURED FROM THE CENTERLINE OF THE MARKINGS.
6. INTERNATIONAL SYMBOL OF ACCESSIBLITY "RESERVED PARKING" SIGNAGE MAY BE PLACED 2 FOOT BEHIND THE FACE OF CURB IF THE REQUIRED CLEAR SPACE BEHIND THE SIGN IS PROVIDED FOR THE ACCESSIBLE ROUTE. (SEE ACCESSIBLE ROUTE NOTES).

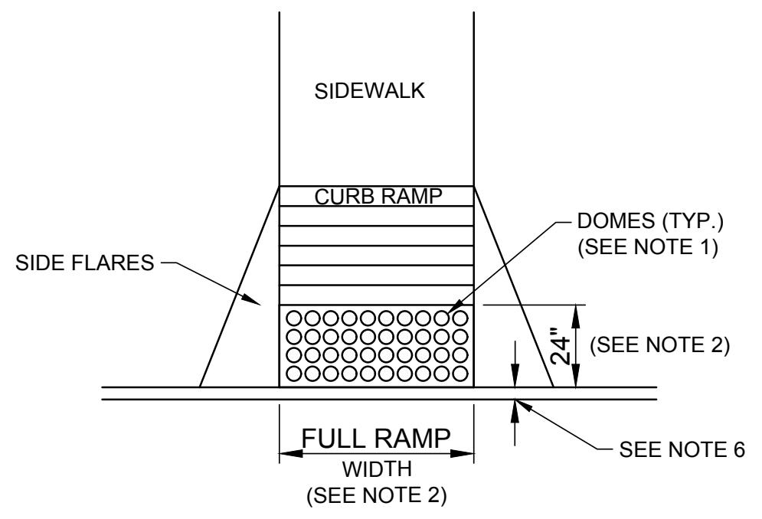
SIDEWALK
CURB RAMP
DOMES (TYP.) (SEE NOTE 1)
SIDE FLARES
24"
(SEE NOTE 2)
FULL RAMP WIDTH (SEE NOTE 2)
SEE NOTE 6

DETECTABLE WARNING AT CURB DETAIL

NOT TO SCALE

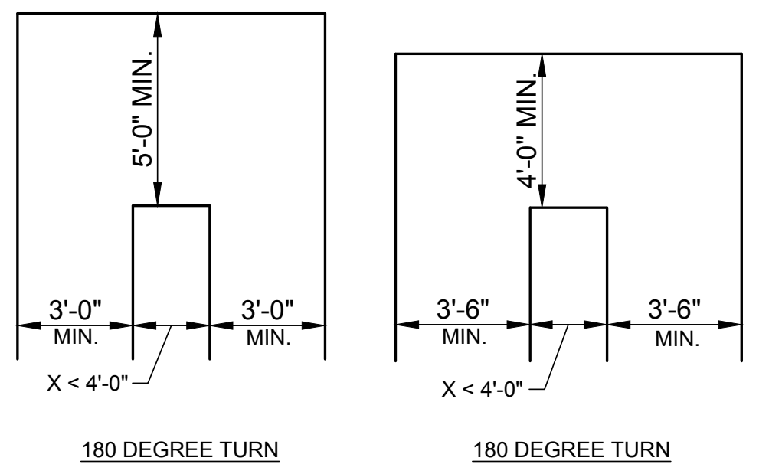
5'-0" MIN.
3'-0" MIN.
3'-0" MIN.
X < 4'-0"
180 DEGREE TURN
4'-0" MIN.
3'-6" MIN.
3'-6" MIN.
X < 4'-0"
180 DEGREE TURN

ACCESSIBLE ROUTE CLEAR WIDTH TURN DETAIL

NOT TO SCALE

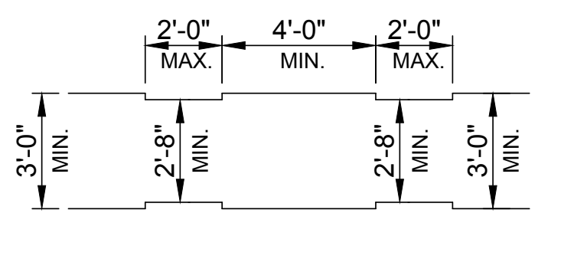
2'-0" MAX
4'-0" MIN.
2'-0" MAX
3'-0" MIN.
2'-8" MIN.
2'-8" MIN.
3'-0" MIN.

ACCESSIBLE ROUTE CLEAR WIDTH DETAIL

NOT TO SCALE

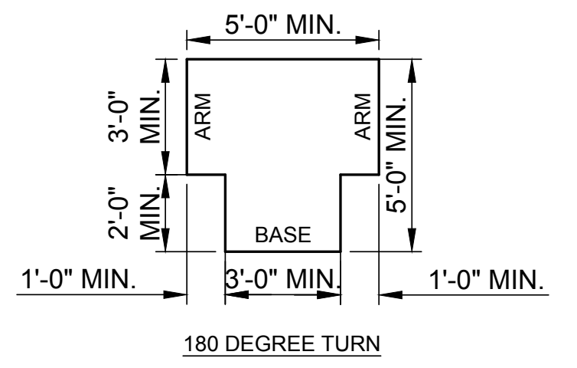
5'-0" MIN.
3'-0" MIN.
ARM
ARM
5'-0" MIN.
2'-0" MIN.
BASE
1'-0" MIN.
3'-0" MIN.
1'-0" MIN.
180 DEGREE TURN

T-SHAPED TURNING SPACE DETAIL

NOT TO SCALE

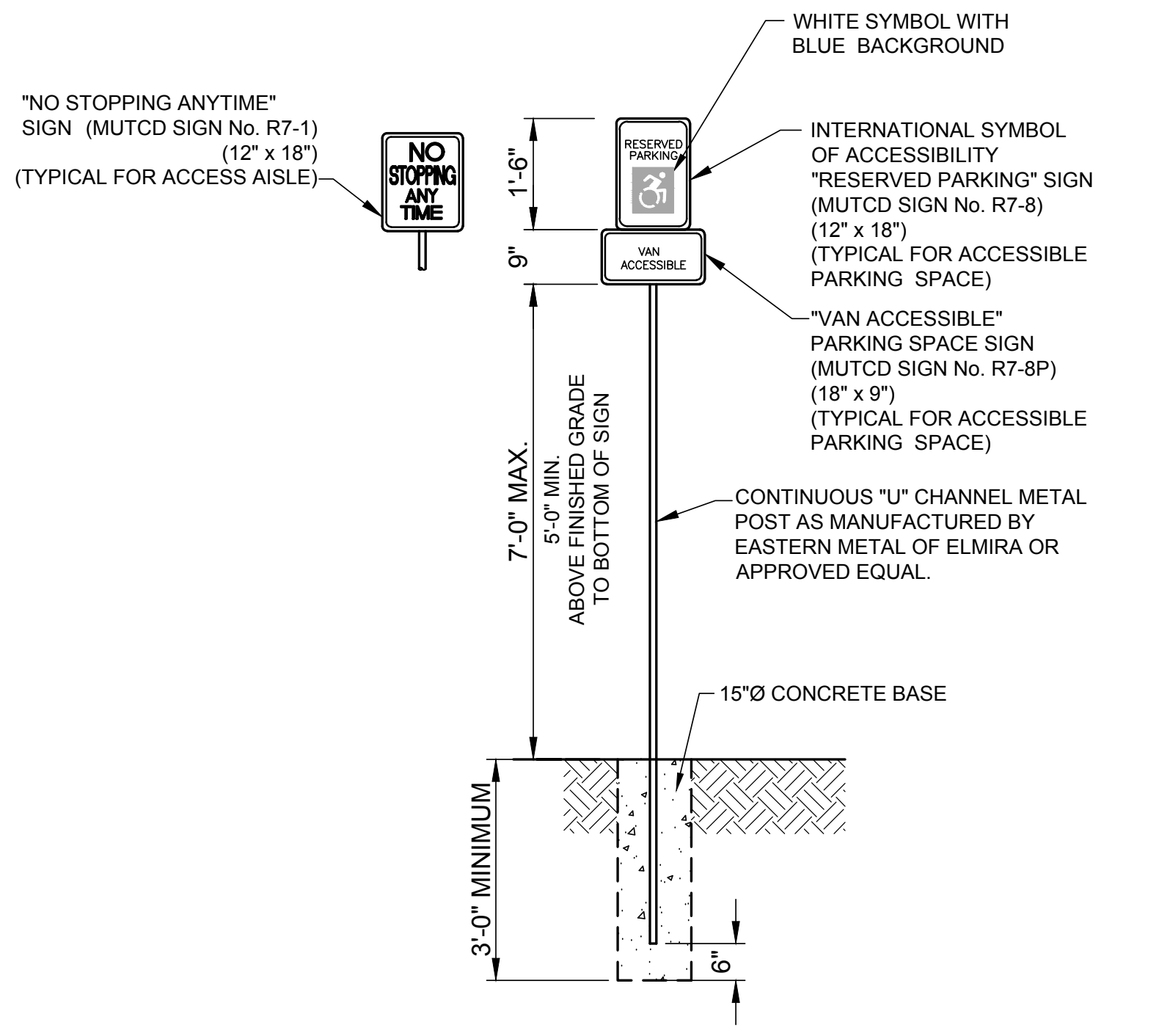
"NO STOPPING ANYTIME" SIGN (MUTCD SIGN No. R7-1) (12" x 18") (TYPICAL FOR ACCESS AISLE)
NO STOPPING ANY TIME
WHITE SYMBOL WITH BLUE BACKGROUND
RESERVED PARKING
INTERNATIONAL SYMBOL OF ACCESSIBILITY "RESERVED PARKING" SIGN (MUTCD SIGN No. R7-8) (12" x 18") (TYPICAL FOR ACCESSIBLE PARKING SPACE)
VAN ACCESSIBLE
"VAN ACCESSIBLE" PARKING SPACE SIGN (MUTCD SIGN No. R7-8P) (18" x 9") (TYPICAL FOR ACCESSIBLE PARKING SPACE)
1'-6"
9"
7'-0" MAX.
5'-0" MIN. ABOVE FINISHED GRADE TO BOTTOM OF SIGN
CONTINUOUS "U" CHANNEL METAL POST AS MANUFACTURED BY EASTERN METAL OF ELMIRA OR APPROVED EQUAL.
15"Ø CONCRETE BASE
3'-0" MINIMUM
6"

ACCESSIBLE PARKING SPACE AND ACCESS AISLE SIGN DETAIL

NOT TO SCALE

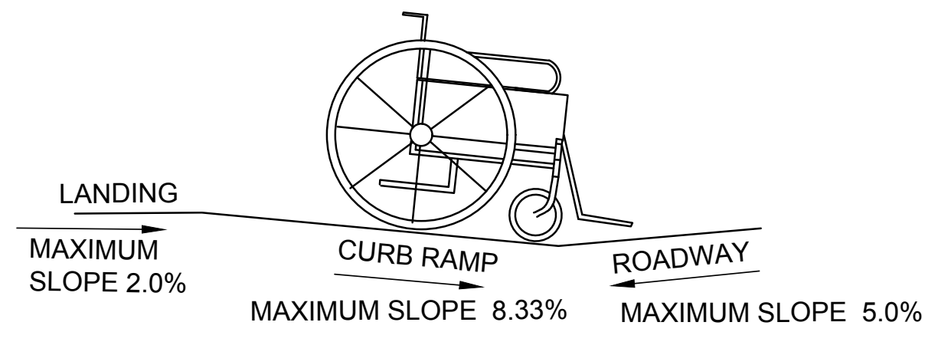
LANDING
MAXIMUM SLOPE 2.0%
CURB RAMP
MAXIMUM SLOPE 8.33%
ROADWAY
MAXIMUM SLOPE 5.0%

COUNTER SLOPE CONDITIONS DETAIL

NOT TO SCALE

NOTE:
THE COUNTER SLOPE OF THE GUTTER OR STREET AT THE FOOT OF A CURB RAMP, LANDING, OR BLENDED TRANSITION SHALL BE 5.0% MAXIMUM.

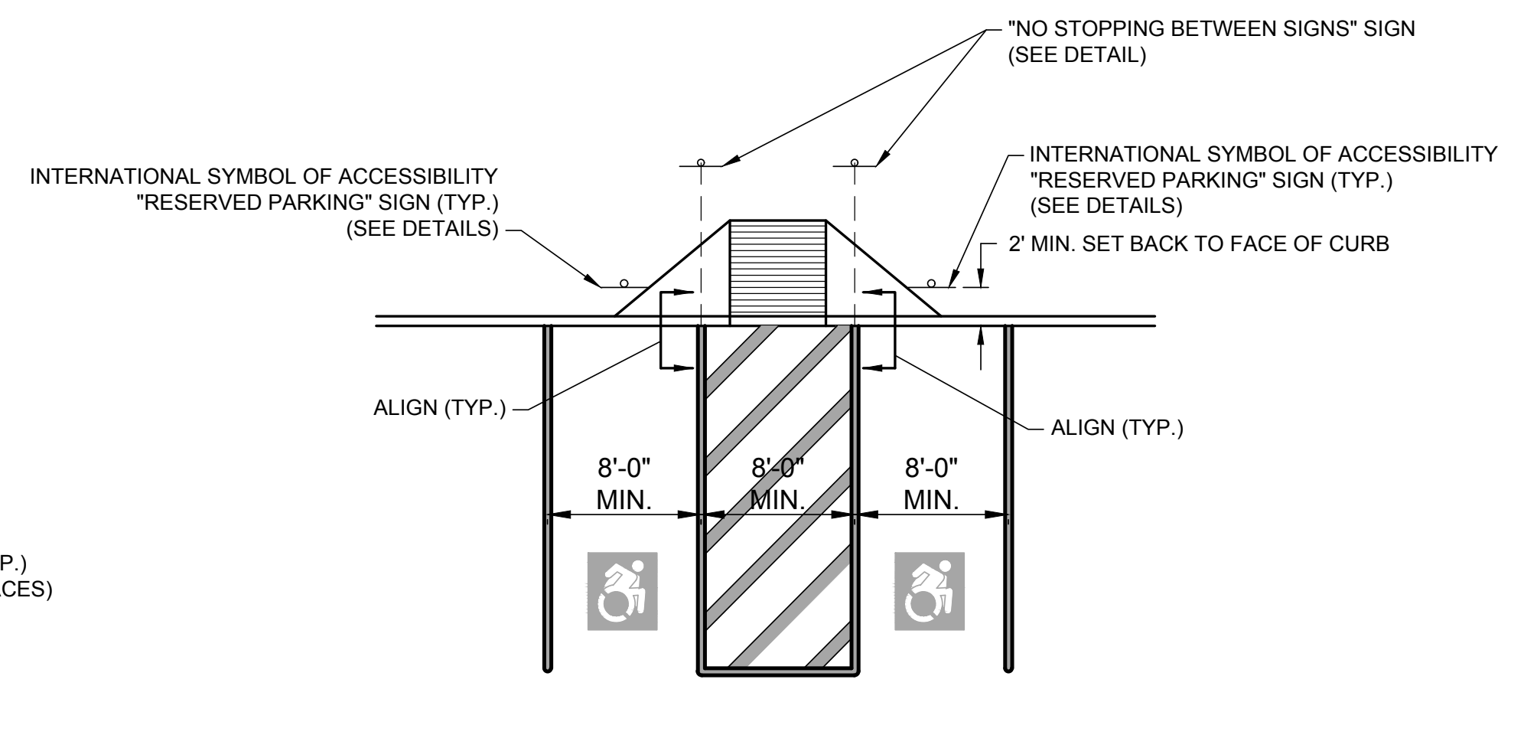
"NO STOPPING BETWEEN SIGNS" SIGN (SEE DETAIL)
INTERNATIONAL SYMBOL OF ACCESSIBILITY "RESERVED PARKING" SIGN (TYP.) (SEE DETAILS)
INTERNATIONAL SYMBOL OF ACCESSIBILITY "RESERVED PARKING" SIGN (TYP.) (SEE DETAILS)
2' MIN. SET BACK TO FACE OF CURB
ALIGN (TYP.)
ALIGN (TYP.)
8'-0" MIN.
8'-0" MIN.
8'-0" MIN.

ALTERNATE ACCESS AISLE SIGN LOCATION DETAIL

NOT TO SCALE

NOTE:
"NO PARKING BETWEEN SIGNS" SIGNAGE SHALL BE USED WHEN A SINGLE "NO PARKING ANYTIME" SIGN LOCATED IN FRONT OF THE ACCESS AISLE WOULD INTERFERE WITH THE ACCESSIBLE ROUTE FROM THE ACCESS AISLE.

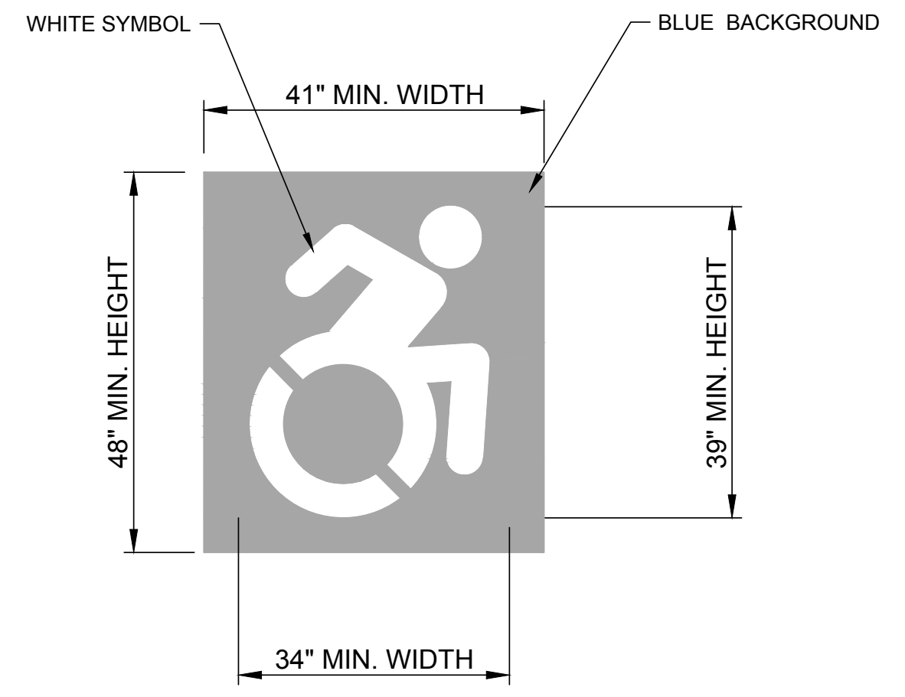
WHITE SYMBOL
BLUE BACKGROUND
41" MIN. WIDTH
48" MIN. HEIGHT
39" MIN. HEIGHT
34" MIN. WIDTH

INTERNATIONAL SYMBOL OF ACCESSIBILITY PAVEMENT MARKING DETAIL

NOT TO SCALE

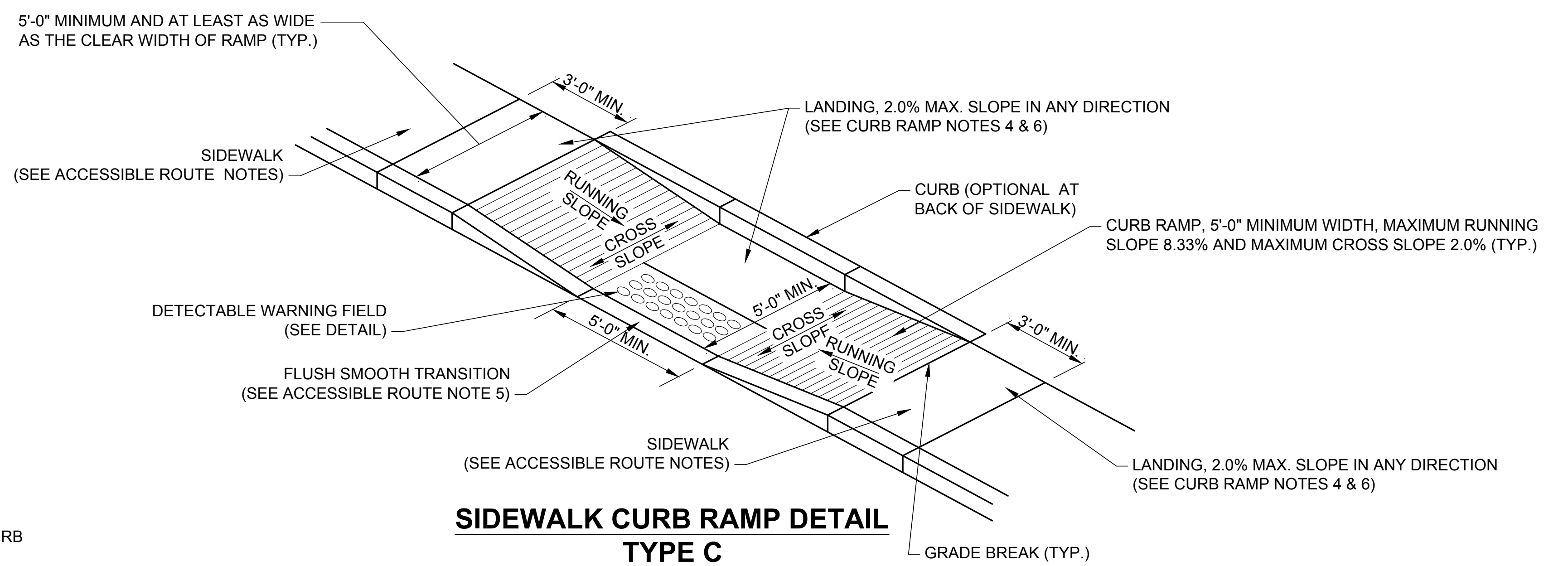
5'-0" MINIMUM AND AT LEAST AS WIDE AS THE CLEAR WIDTH OF RAMP (TYP.)
3'-0" MIN.
LANDING, 2.0% MAX. SLOPE IN ANY DIRECTION (SEE CURB RAMP NOTES 4 & 6)
SIDEWALK (SEE ACCESSIBLE ROUTE NOTES)
CURB (OPTIONAL AT BACK OF SIDEWALK)
RUNNING SLOPE
CROSS SLOPE
CURB RAMP, 5'-0" MINIMUM WIDTH, MAXIMUM RUNNING SLOPE 8.33% AND MAXIMUM CROSS SLOPE 2.0% (TYP.)
DETECTABLE WARNING FIELD (SEE DETAIL)
5'-0" MIN.
5'-0" MIN.
CROSS SLOPE
RUNNING SLOPE
3'-0" MIN.
FLUSH SMOOTH TRANSITION (SEE ACCESSIBLE ROUTE NOTE 5)
SIDEWALK (SEE ACCESSIBLE ROUTE NOTES)
LANDING, 2.0% MAX. SLOPE IN ANY DIRECTION (SEE CURB RAMP NOTES 4 & 6)
GRADE BREAK (TYP.) (SEE ACCESSIBLE ROUTE NOTE 5)

SIDEWALK CURB RAMP DETAIL TYPE C

NOT TO SCALE

PARKING SPACE NOTES:

1. ACCESSIBLE PARKING SPACES SHALL BE LOCATED ON THE SHORTEST ACCESSIBLE ROUTES OF TRAVEL FROM ADJACENT PARKING TO AN ACCESSIBLE BUILDING ENTRANCE.
2. ACCESSIBLE PARKING SPACES AND ACCESS AISLES SHALL BE AT LEAST NINETY-SIX (96) INCHES WIDE. WHERE PARKING SPACES AND ACCESS AISLES ARE MARKED WITH LINES, THE WIDTH MEASUREMENTS SHALL BE MADE FROM CENTERLINE OF THE MARKINGS. WHERE PARKING SPACES OR ACCESS AISLES ARE NOT ADJACENT TO ANOTHER PARKING SPACE OR ACCESS AISLES, MEASUREMENTS SHALL BE PERMITTED TO INCLUDE THE FULL WIDTH OF THE LINE DEFINING THE PARKING SPACE OR ACCESS AISLE.
3. PARKING ACCESS AISLES SHALL BE PART OF AN ACCESSIBLE ROUTE TO THE BUILDING OR FACILITY ENTRANCE AND SHALL COMPLY WITH PROVISIONS FOR ACCESSIBLE ROUTES. MARKED CROSSINGS SHALL BE PROVIDED WHERE THE ACCESSIBLE ROUTE MUST CROSS VEHICULAR TRAFFIC LANES. WHERE POSSIBLE, IT IS PREFERABLE THAT THE ACCESSIBLE ROUTE NOT PASS BEHIND PARKED VEHICLES.
4. TWO (2) ACCESSIBLE PARKING SPACES MAY SHARE A COMMON ACCESS AISLE.
5. ACCESS AISLES SHALL EXTEND THE FULL LENGTH OF THE PARKING SPACE THEY SERVE.
6. ACCESS AISLES SHALL BE MARKED SO AS TO DISCOURAGE PARKING IN THEM.
7. ACCESS AISLES SHALL NOT OVERLAP THE VEHICULAR WAY. ACCESS AISLES SHALL BE PERMITTED TO BE PLACED ON EITHER SIDE OF THE PARKING SPACE EXCEPT FOR ANGLED VAN PARKING SPACES WHICH SHALL HAVE ACCESS AISLES LOCATED ON THE PASSENGER SIDE OF THE PARKING SPACES.
8. FLOOR SURFACES OF PARKING SPACES AND ACCESS AISLES SERVING THEM SHALL BE STABLE, FIRM AND SLIP RESISTANT. ACCESS AISLES SHALL BE AT THE SAME LEVEL AS THE PARKING SPACES THEY SERVE. CHANGES IN LEVEL ARE NOT PERMITTED.
9. PARKING SPACES AND ACCESS AISLES SHALL BE LEVEL WITH SURFACE SLOPES NOT EXCEEDING 2.0% IN ALL DIRECTIONS.
10. PARKED VEHICLE OVERHANGS SHALL NOT REDUCE THE REQUIRED CLEAR WIDTH OF AN ACCESSIBLE ROUTE.
11. PARKING SPACES FOR VANS AND ACCESS AISLES AND VEHICULAR ROUTES SERVING THEM SHALL PROVIDE A VERTICAL CLEARANCE OF NINETY-EIGHT (98) INCHES MINIMUM. SIGNS SHALL BE PROVIDED AT ENTRANCES TO PARKING FACILITIES INFORMING DRIVERS OF CLEARANCES AND THE LOCATION OF VAN ACCESSIBLE PARKING SPACES.
12. EACH ACCESSIBLE PARKING SPACE SHALL BE PROVIDED WITH SIGNAGE DISPLAYING THE INTERNATIONAL SYMBOL OF ACCESSIBILITY. EACH ACCESS AISLE SHALL BE PROVIDED WITH SIGNAGE READING “NO PARKING ANYTIME". SIGNS SHALL BE INSTALLED AT A CLEAR HEIGHT OF BETWEEN SIXTY (60) INCHES AND EIGHTY-FOUR (84) INCHES ABOVE GRADE AND SHALL NOT INTERFERE WITH AN ACCESSIBLE ROUTE FROM AN ACCESS AISLE. SIGNS LOCATED WHERE THEY MAY BE HIT BY VEHICLES BEING PARKED SHALL BE INSTALLED WITH BOLLARD PROTECTION.
13. ACCESSIBLE PARKING SPACE, ACCESS AISLE STRIPING, AND INTERNATIONAL SYMBOL OF ACCESSIBILITY SHALL BE PAINTED BLUE.

PASSENGER LOADING ZONE NOTES:

1. PASSENGER LOADING ZONES SHALL PROVIDE VEHICULAR PULL-UP SPACE NINETY-SIX (96) INCHES WIDE MINIMUM AND TWENTY (20) FEET LONG MINIMUM.
2. PASSENGER LOADING ZONES SHALL PROVIDE A CLEARLY MARKED ACCESS AISLE THAT IS SIXTY (60) INCHES WIDE MINIMUM AND EXTENDS THE FULL LENGTH OF THE VEHICLE PULL-UP SPACE THEY SERVE.
3. ACCESS AISLE SHALL ADJOIN AN ACCESSIBLE ROUTE AND NOT OVERLAP THE VEHICULAR WAY.
4. VEHICLE PULL-UP SPACES AND ACCESS AISLES SERVING THEM SHALL BE LEVEL WITH SURFACE SLOPES NO EXCEEDING 2.0% IN ALL DIRECTIONS. ACCESS AISLES SHALL BE AT THE SAME LEVEL AS THE VEHICLE PULL-UP SPACE THEY SERVE. CHANGES IN LEVEL ARE NOT PERMITTED.
5. FLOOR SURFACES OF VEHICLE PULL-UP SPACES AND ACCESS AISLES SERVING THEM SHALL BE STABLE, FIRM AND SLIP RESISTANT.
6. VEHICLE PULL-UP SPACES, ACCESS AISLES SERVING THEM AND A VEHICULAR ROUTE FROM AN ENTRANCE TO THE PASSENGER LOADING ZONE, AND FROM THE PASSENGER LOADING ZONE TO A VEHICULAR EXIT SERVING THEM, SHALL PROVIDE A VERTICAL CLEARANCE OF ONE HUNDRED FOURTEEN (114) INCHES MINIMUM.

ACCESSIBLE ENTRANCE NOTES:

1. ACCESSIBLE ENTRANCES SHALL BE PROVIDED AS REQUIRED BY ADAAG AND BCNYS REQUIREMENTS.
2. ENTRANCE DOORS, DOORWAYS AND GATES SHALL COMPLY WITH ADAAG AND BCNYS REQUIREMENTS AND SHALL BE ON AN ACCESSIBLE ROUTE.

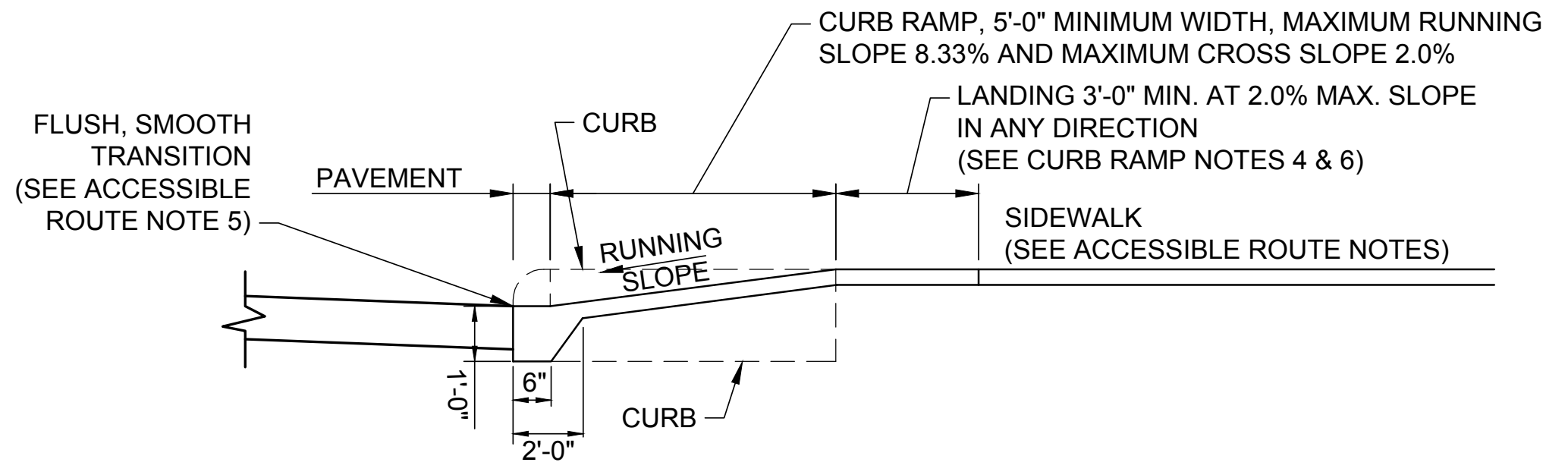
CURB RAMP, 5'-0" MINIMUM WIDTH, MAXIMUM RUNNING SLOPE 8.33% AND MAXIMUM CROSS SLOPE 2.0%
LANDING 3'-0" MIN. AT 2.0% MAX. SLOPE IN ANY DIRECTION (SEE CURB RAMP NOTES 4 & 6)
FLUSH, SMOOTH TRANSITION (SEE ACCESSIBLE ROUTE NOTE 5)
CURB
PAVEMENT
RUNNING SLOPE
SIDEWALK (SEE ACCESSIBLE ROUTE NOTES)
0'-1"
6"
2'-0"
CURB

SECTION A-A

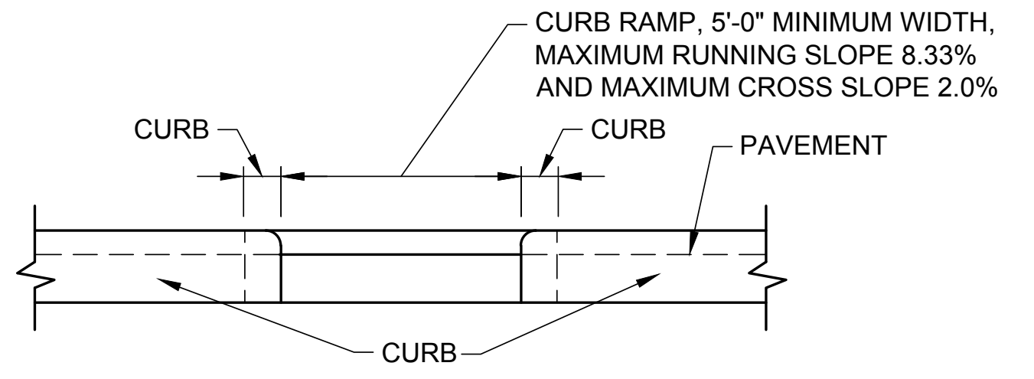
CURB RAMP, 5'-0" MINIMUM WIDTH, MAXIMUM RUNNING SLOPE 8.33% AND MAXIMUM CROSS SLOPE 2.0%
CURB
CURB
PAVEMENT
CURB

SECTION B-B

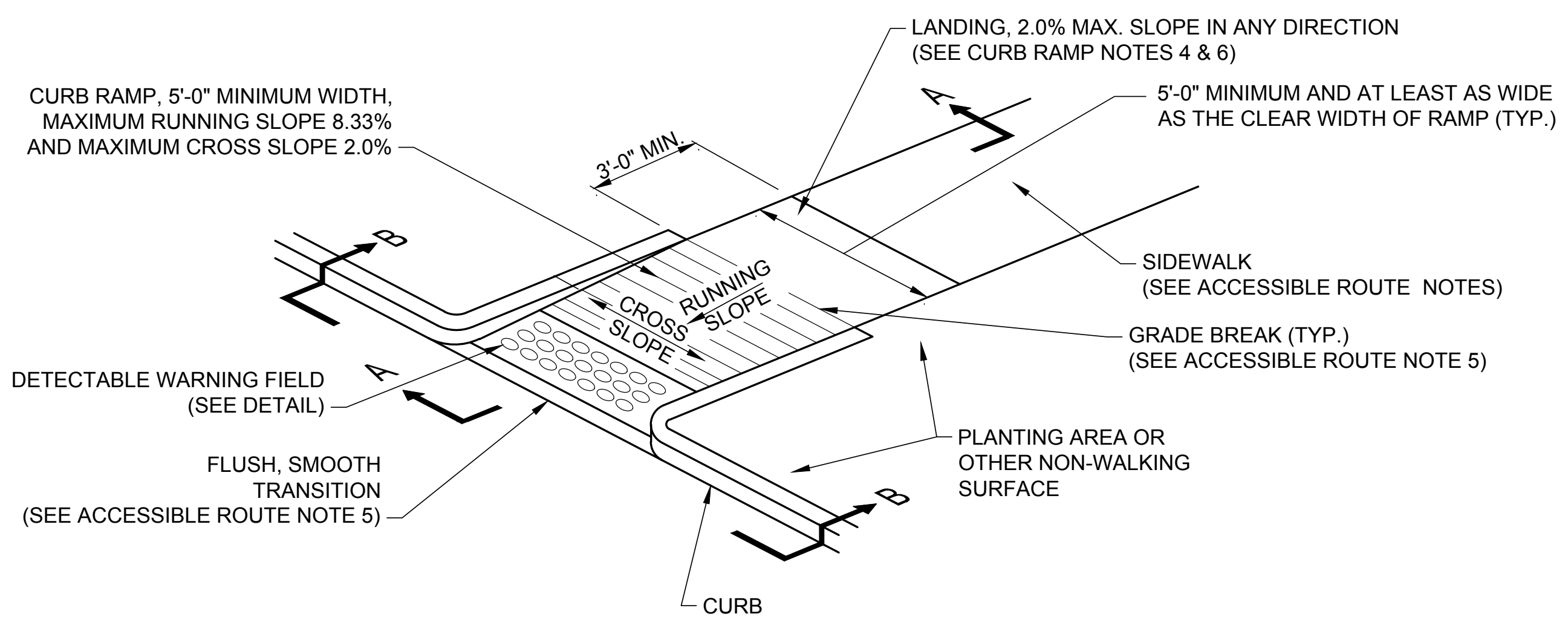
CURB RAMP, 5'-0" MINIMUM WIDTH, MAXIMUM RUNNING SLOPE 8.33% AND MAXIMUM CROSS SLOPE 2.0%
LANDING, 2.0% MAX. SLOPE IN ANY DIRECTION (SEE CURB RAMP NOTES 4 & 6)
5'-0" MINIMUM AND AT LEAST AS WIDE AS THE CLEAR WIDTH OF RAMP (TYP.)
3'-0" MIN.
B
B
RUNNING SLOPE
CROSS SLOPE
A
A
SIDEWALK (SEE ACCESSIBLE ROUTE NOTES)
GRADE BREAK (TYP.) (SEE ACCESSIBLE ROUTE NOTE 5)
DETECTABLE WARNING FIELD (SEE DETAIL)
FLUSH, SMOOTH TRANSITION (SEE ACCESSIBLE ROUTE NOTE 5)
PLANTING AREA OR OTHER NON-WALKING SURFACE
CURB

SIDEWALK CURB RAMP DETAIL TYPE B

NOT TO SCALE

ACCESSIBILITY NOTES:

GENERAL NOTES:

1. SPECIAL ATTENTION SHALL BE GIVEN TO COMPLIANCE WITH THE AMERICANS WITH DISABILITIES ACT STANDARDS FOR ACCESSIBLE DESIGN (ADAAG), BUILDING CODE OF NEW YORK STATE (BCNYS), AND APPLICABLE LOCAL LAWS AND REGULATIONS, LATEST EDITIONS.
2. IT IS ESSENTIAL THAT CONTRACTORS ARE AWARE OF THE SITE ACCESSIBILITY REQUIREMENTS. NELSON & POPE HAS DEVELOPED THESE NOTES AND DETAILS TO ASSURE THAT CONTRACTORS ARE AWARE OF THE REQUIREMENTS AT THE POINT IN TIME WHEN THEY ARE BIDDING THE PROJECT. IN ADDITION, NELSON & POPE HAS MADE A POINT IN THESE NOTES AND DETAILS, AS WELL AS IN OUR DRAWINGS, TO PROVIDE SLOPES / GRADES AND DIMENSIONS THAT COMPLY WITH THE ADAAG, BCNYS AND APPLICABLE LOCAL LAWS AND REGULATIONS, LATEST EDITIONS. IF THESE SLOPES / GRADES AND DIMENSIONS ARE NOT ACHIEVABLE, THE CONTRACTOR IS REQUIRED TO CONTACT THE OWNER IMMEDIATELY AND BEFORE MOVING FORWARD WITH THE WORK.
3. THE CONTRACTOR SHALL NOTIFY NELSON & POPE IMMEDIATELY OF ANY CONFLICT BETWEEN THESE NOTES AND DETAILS AND OTHER PROJECT DRAWINGS, WHETHER BY NELSON & POPE OR OTHERS. THE CONTRACTOR SHALL NOT PROCEED WITH THE WORK FOR WHICH THE ALLEGED CONFLICT HAS BEEN DISCOVERED UNTIL SUCH ALLEGED CONFLICT HAS BEEN RESOLVED. NO CLAIM SHALL BE MADE BY THE CONTRACTOR FOR DELAY DAMAGES AS A RESULT OF RESOLUTION OF ANY SUCH CONFLICT(S).
4. THESE ACCESSIBILITY NOTES AND DETAILS ARE INTENDED TO DEPICT SLOPE AND DIMENSIONAL REQUIREMENTS ONLY. REFER TO SIDEWALK, CURBING, AND PAVEMENT DETAILS FOR ADDITIONAL INFORMATION.

ACCESSIBLE ROUTE NOTES:

1. AT LEAST ONE ACCESSIBLE ROUTE SHALL BE PROVIDED WITHIN THE SITE FROM ACCESSIBLE PARKING SPACES AND ACCESSIBLE PASSENGER LOADING ZONES; PUBLIC STREETS OR SIDEWALKS; AND PUBLIC TRANSPORTATION STOPS TO THE ACCESSIBLE BUILDING OR FACILITY THEY SERVE.
2. AT LEAST ONE ACCESSIBLE ROUTE SHALL CONNECT ACCESSIBLE BUILDINGS, ACCESSIBLE FACILITIES, ACCESSIBLE ELEMENTS, AND ACCESSIBLE SPACES THAT ARE ON THE SAME SITE.
3. WALKING SURFACES SHALL HAVE A MAXIMUM RUNNING SLOPE OF 5.0% AND A MAXIMUM CROSS SLOPE OF 2.0%.
4. ANY WALKING SURFACE WITH A RUNNING SLOPE GREATER THAN 5.0% IS A RAMP AND SHALL COMPLY WITH THE GUIDELINES FOR RAMPS OR CURB RAMPS.
5. TRANSITIONS BETWEEN RAMPS, WALKS, LANDINGS, GUTTERS OR STREETS SHALL BE FLUSH AND FREE OF ABRUPT VERTICAL CHANGES (1/4 INCH MAXIMUM VERTICAL CHANGE IN LEVEL).
6. FLOOR SURFACES SHALL BE STABLE, FIRM AND SLIP RESISTANT.
7. THE MINIMUM CLEAR WIDTH SHALL BE THIRTY-TWO (32) INCHES FOR A ROUTE SEGMENT LENGTH LESS THAN TWENTY-FOUR (24) INCHES. CONSECUTIVE SEGMENTS OF THIRTY-TWO (32) INCHES IN WIDTH MUST BE SEPARATED BY A ROUTE SEGMENT FORTY-EIGHT (48) INCHES MINIMUM IN LENGTH AND THIRTY-SIX (36) INCHES MINIMUM IN WIDTH.
8. THE MINIMUM CLEAR WIDTH SHALL BE THIRTY-SIX (36) INCHES FOR A ROUTE SEGMENT LENGTH GREATER THAN TWENTY-FOUR (24) INCHES.
9. WHERE AN ACCESSIBLE ROUTE MAKES A 180 DEGREE TURN AROUND AN OBJECT THAT IS LESS THAN FORTY-EIGHT (48) INCHES IN WIDTH, CLEAR WIDTH SHALL BE FORTY-TWO (42) INCHES MINIMUM APPROACHING THE TURN, FORTY-EIGHT (48) INCHES MINIMUM DURING THE TURN, AND FORTY-TWO (42) INCHES MINIMUM LEAVING THE TURN. THE CLEAR WIDTH APPROACHING AND LEAVING THE TURN MAY BE THIRTY-SIX (36) INCHES MINIMUM WHEN THE CLEAR WIDTH AT THE TURN IS SIXTY (60) INCHES MINIMUM.
10. AN ACCESSIBLE ROUTE WITH A CLEAR WIDTH LESS THAN SIXTY (60) INCHES SHALL PROVIDE PASSING SPACES AT INTERVALS OF TWO HUNDRED (200) FEET MAXIMUM. PASSING SPACES SHALL BE EITHER A SIXTY (60) INCH MINIMUM BY SIXTY (60) INCH MINIMUM SPACE; OR AN INTERSECTION OF TWO (2) WALKING SURFACES THAT PROVIDE A COMPLIANT T-SHAPED TURNING SPACE, PROVIDED THE BASE AND ARMS OF THE T-SHAPED SPACE EXTEND FORTY-EIGHT (48) INCHES MINIMUM BEYOND THE INTERSECTION.
11. DOORS, DOORWAYS AND GATES THAT ARE PART OF AN ACCESSIBLE ROUTE SHALL COMPLY WITH ADAAG AND BCNYS REQUIREMENTS.
12. DIRECTIONAL SIGNAGE INDICATING THE ROUTE TO THE NEAREST ACCESSIBLE BUILDING ENTRANCE SHALL BE PROVIDED AT INACCESSIBLE BUILDING ENTRANCES.
14. WHERE POSSIBLE, DRAINAGE INLETS SHALL NOT BE LOCATED ON AN ACCESSIBLE ROUTE. IN THE EVENT THAT A DRAINAGE INLET MUST BE LOCATED ON AN ACCESSIBLE ROUTE, THE GRATE SHALL COMPLY WITH ADAAG REQUIREMENTS.

RAMP NOTES:

1. ANY PART OF AN ACCESSIBLE ROUTE WITH A RUNNING SLOPE GREATER THAN 5% SHALL BE CONSIDERED A RAMP.
2. THE MAXIMUM RUNNING SLOPE FOR A RAMP SHALL BE 8.33% AND THE MAXIMUM CROSS SLOPE SHALL BE 2.0%.
3. THE CLEAR WIDTH OF A RAMP RUN SHALL BE THIRTY-SIX (36) INCHES MINIMUM. WHERE HANDRAILS ARE PROVIDED ON THE RAMP RUN, THE CLEAR WIDTH SHALL BE MEASURED BETWEEN THE HANDRAILS.
4. THE RISE FOR ANY RAMP RUN SHALL BE THIRTY (30) INCHES MAXIMUM.
5. LANDINGS SHALL BE PROVIDED AT THE TOP AND BOTTOM OF RAMPS. LANDINGS SHALL HAVE A SLOPE NOT STEEPER THAN 2.0% IN ANY DIRECTION. THE LANDING CLEAR WIDTH SHALL BE AT LEAST AS WIDE AS THE WIDEST RAMP RUN LEADING TO THE LANDING. THE LANDING CLEAR LENGTH SHALL BE SIXTY (60) INCHES LONG MINIMUM. RAMPS THAT CHANGE DIRECTION BETWEEN RUNS AT LANDINGS SHALL HAVE A CLEAR LANDING OF SIXTY (60) INCHES BY SIXTY (60) INCHES MINIMUM.
6. RAMP RUNS WITH A RISE GREATER THAN SIX (6) INCHES OR A HORIZONTAL PROJECTION GREATER THAN SEVENTY-TWO (72) INCHES SHALL HAVE HANDRAILS ON BOTH SIDES COMPLYING WITH ADAAG AND BCNYS REQUIREMENTS.
7. FLOOR SURFACES OF RAMPS AND LANDINGS SHALL BE STABLE, FIRM AND SLIP RESISTANT.
8. EDGE PROTECTION COMPLYING WITH ADAAG AND BCNYS REQUIREMENTS SHALL BE PROVIDED ON EACH SIDE OF RAMP RUNS AND ON EACH SIDE OF RAMP LANDINGS.
9. WHERE DOORWAYS ARE LOCATED ADJACENT TO A RAMP LANDING, MANEUVERING CLEARANCES REQUIRED BY ADAAG AND BCNYS REQUIREMENTS SHALL BE PERMITTED TO OVERLAP THE REQUIRED LANDING AREA. WHERE DOORS THAT ARE SUBJECT TO LOCKING ARE ADJACENT TO A RAMP LANDING, LANDINGS SHALL BE SIZED TO PROVIDE A COMPLIANT TURNING SPACE.

CURB RAMP NOTES:

1. THE MAXIMUM RUNNING SLOPE OF A CURB RAMP SHALL BE 8.33% AND THE MAXIMUM CROSS SLOPE SHALL BE 2.0%.
2. COUNTER SLOPES OF ADJOINING GUTTERS AND ROAD SURFACES IMMEDIATELY ADJACENT TO THE CURB RAMP SHALL NOT BE STEEPER THAN 5%. THE ADJACENT SURFACES AT TRANSITIONS AT CURB RAMPS TO WALKS, GUTTERS AND STREETS SHALL BE AT THE SAME LEVEL.
3. THE CLEAR WIDTH OF A CURB RAMP SHALL BE SIXTY (60) INCHES MINIMUM, EXCLUSIVE OF FLARED SIDES, IF PROVIDED.
4. LANDINGS SHALL BE PROVIDED AT THE TOP OF CURB RAMPS. THE CLEAR LENGTH OF THE LANDING SHALL BE THIRTY-SIX (36) INCHES MINIMUM. THE CLEAR WIDTH OF THE LANDING SHALL BE AT LEAST AS WIDE AS THE CURB RAMP, EXCLUDING FLARED SIDES, LEADING TO THE LANDING. LANDINGS SHALL HAVE A SLOPE NOT STEEPER THAN 2% IN ANY DIRECTION.
5. IF A CURB RAMP IS LOCATED WHERE PEDESTRIANS MUST WALK ACROSS THE RAMP, OR WHERE IT IS NOT PROTECTED BY HANDRAILS OR GUARDRAILS, IT SHALL HAVE FLARED SIDES.
6. WHERE PROVIDED, CURB RAMP FLARES SHALL NOT EXCEED 10%. IF THE CLEAR LENGTH OF THE LANDING IS LESS THAN FORTY-EIGHT (48) INCHES THAN THE SLOPE OF THE FLARED SIDES SHALL NOT EXCEED 8.33%.
7. CURB RAMPS AND THE FLARED SIDES OF CURB RAMPS SHALL BE LOCATED SO THAT THEY DO NOT PROJECT INTO VEHICULAR TRAFFIC LANES, PARKING SPACES OR PARKING ACCESS AISLES. CURBS AT MARKED CROSSINGS SHALL BE WHOLLY CONTAINED WITHIN THE MARKINGS, EXCLUDING ANY FLARED SIDES.
8. CURB RAMPS SHALL BE LOCATED OR PROTECTED TO PREVENT THEIR OBSTRUCTION BY PARKED VEHICLES.
9. CURB RAMPS SHALL HAVE A TWENTY-FOUR (24) INCH DEEP DETECTABLE WARNING COMPLYING WITH ADAAG, EXTENDING THE FULL WIDTH OF THE RAMP. REFER TO DETECTABLE WARNING DETAILS AND NOTES FOR PLACEMENT, ORIENTATION AND NOTES.
10. FLOOR SURFACES OF CURB RAMPS SHALL BE DEEP GROOVED, ½ INCH WIDE BY ¼ INCH DEEP, ONE (1) INCH CENTERS TRANSVERSE TO THE RAMP.
11. WHERE PROVIDED, STOP LINES SHALL BE LOCATED IN ADVANCE OF CURB RAMP.
12. WHERE PROVIDED, PEDESTRIAN ACTIVATED SIGNALS SHALL BE LOCATED ADJACENT TO THE SIDEWALK AND NOT ON THE SIDEWALK.
13. WHERE PROVIDED, DRAINAGE INLETS SHALL BE LOCATED UPSTREAM OF CURB RAMPS AND NOT IN THE RAMP AREA.
14. CURB RAMP TYPE AND LOCATION ARE PER PLAN.

FOR TOWN USE

No.	REVISION	DATE

OWNER
I.H.C.C., INC. AND
ROBERG REVOCABLE TRUST
21 BREEZE HILL ROAD
NORTHPORT, NY, 11768
(631) 261 - 5700

APPLICANT:
THE PRESERVE AT INDIAN HILLS
1 RABRO DRIVE, SUITE 100
HAUPPAUGE, N.Y. 11788
(631) 351 - 4000

ACCESSIBILITY DETAILS, RAMPS AND NOTES
FOR
THE PRESERVE AT INDIAN HILLS
SITUATED AT
NORTHPORT
TOWN OF HUNTINGTON, SUFFOLK COUNTY, NEW YORK
S.C.T.M.: DISTRICT: 0400, SECT. 014, BLK. 04, LOTS 1 AND 2
DISTRICT 0400, SECT. 015, BLK. 01, LOTS 3.1, 3.2, 11, 12, 16, 19 AND P/O 22

THOMAS CHARLES DIXON
080915

NELSON + POPE
engineers • architects • surveyors
70 Maxess Road, Melville, NY 11747 • 631.427.5665 • nelsonpope.com

DRAWN BY: GEO	CADD No.: 86047 CSP 2021 DETAILS.DWG	SCALE: NONE	DRAWING NO.: C - 505
CHECKED BY: JM	FILE NO.: 400-014		
DATE: OCTOBER, 2021	PROJECT NO.: 86047		SHEET NO.: 39 OF 44

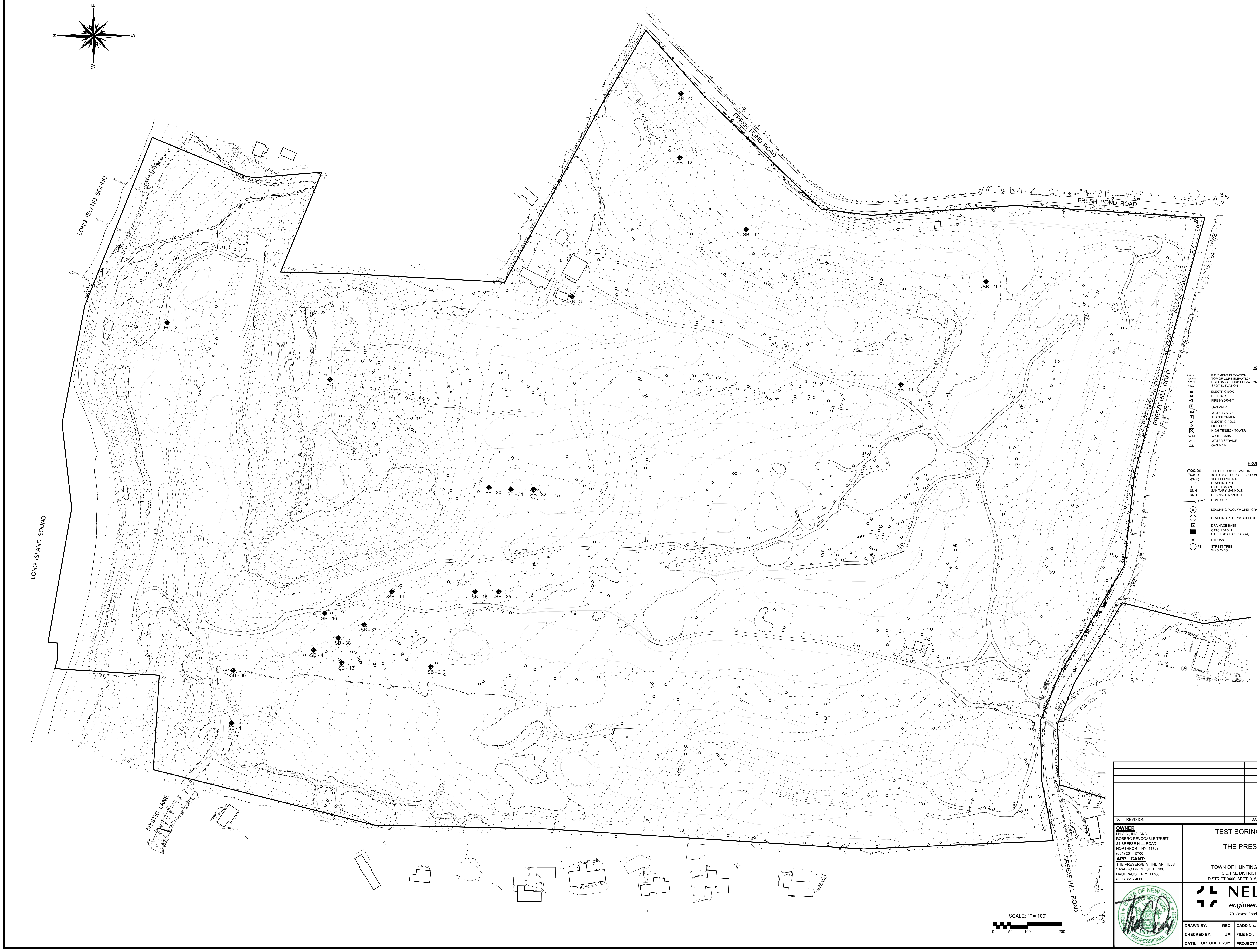
N
E
S
W
LONG ISLAND SOUND
LONG ISLAND SOUND
FRESH POND ROAD
FRESH POND ROAD
BREEZE HILL ROAD
BREEZE HILL ROAD
MYSTIC LANE
SB - 43
SB - 12
SB - 42
SB - 10
SB - 3
EC - 2
EC - 1
SB - 11
SB - 30
SB - 31
SB - 32
SB - 14
SB - 15
SB - 35
SB - 16
SB - 37
SB - 38
SB - 41
SB - 13
SB - 2
SB - 36
SB - 1
SCALE: 1" = 100'
0
50
100
200

EXISTING

P92.59	PAVEMENT ELEVATION
TC92.59	TOP OF CURB ELEVATION
BC92.2	BOTTOM OF CURB ELEVATION
X92.0	SPOT ELEVATION
⊠	ELECTRIC BOX
⊠	PULL BOX
	FIRE HYDRANT
G	GAS VALVE
WV	WATER VALVE
T	TRANSFORMER
	ELECTRIC POLE
✲	LIGHT POLE
☒	HIGH TENSION TOWER
W.M.	WATER MAIN
W.S.	WATER SERVICE
G.M.	GAS MAIN

94	CONTOUR
E	ELECTRIC
W	WATER
G	GAS
X	FENCE
S	SANITARY SEWER
T	TELEPHONE
OHW	OVERHEAD WIRE
D	DRAINAGE
CATV	TELEVISION
◎	DRAINAGE MANHOLE
▦	CATCH BASINS
☒	TREE TO BE REMOVED
○	TREE TO REMAIN
□	MONUMENT

PROPOSED

(TC92.00)	TOP OF CURB ELEVATION
(BC91.5)	BOTTOM OF CURB ELEVATION
x(92.0)	SPOT ELEVATION
LP	LEACHING POOL
CB	CATCH BASIN
SMH	SANITARY MANHOLE
DMH	DRAINAGE MANHOLE
(93)	CONTOUR
⊜	LEACHING POOL W/ OPEN GRATE
○	LEACHING POOL W/ SOLID COVER
⊡	DRAINAGE BASIN
■	CATCH BASIN (TC ~ TOP OF CURB BOX)
	HYDRANT
⊕ PS	STREET TREE W / SYMBOL

(W)	WATER
(FS)	FIRE SERVICE
(WS)	WATER SERVICE
(E)	ELECTRIC
(G)	GAS
X	FENCE
(HC)	SANITARY HOUSE CONNECTION
(D)	DRAINAGE
(RD)	ROOF DRAIN
(T)	TELEPHONE
(CATV)	TELEVISION
▨	CONCRETE WALK
/ / /	LIMIT OF CLEARING AND GRADING DURING CONSTRUCTION
▨	SAWCUT W/ PAVEMENT TO BE REMOVED
⊕	TEST HOLE
▬ ▬ ▬	DRAINAGE RIDGELINE
■	PROPOSED MONUMENT

FOR TOWN USE

No.	REVISION	DATE

OWNER
I.H.C.C., INC. AND
ROBERG REVOCABLE TRUST
21 BREEZE HILL ROAD
NORTHPORT, NY, 11768
(631) 261 - 5700

APPLICANT:
THE PRESERVE AT INDIAN HILLS
1 RABRO DRIVE, SUITE 100
HAUPPAUGE, N.Y. 11788
(631) 351 - 4000

TEST BORING PLAN - NORTH PARCEL
FOR
THE PRESERVE AT INDIAN HILLS
SITUATED AT
NORTHPORT
TOWN OF HUNTINGTON, SUFFOLK COUNTY, NEW YORK
S.C.T.M.: DISTRICT: 0400, SECT. 014, BLK. 04, LOTS 1 AND 2
DISTRICT 0400, SECT. 015, BLK. 01, LOTS 3.1, 3.2, 11, 12, 16, 19 AND P/O 22

THOMAS CHARLES DIXON

NELSON + POPE
engineers • architects • surveyors
70 Maxess Road, Melville, NY 11747 • 631.427.5665 • nelsonpope.com

DRAWN BY: GEO	**CADD No.:** 86047 CSP TB_LOGS 2021.DWG	**SCALE:**	**DRAWING NO.:**	
CHECKED BY: JM	**FILE NO.:** 400-014	1"=100'	TB - 101	
DATE: OCTOBER, 2021	**PROJECT NO.:** 86047		**SHEET NO.:** 40 OF 44	

G:\projects\86047\FINALS\CONDOMINIUM\86047 CSP TB_LOGS 2021.dwg, 40 OF 44 TEST BORING PLAN - NORTH PARCEL, 10/11/2021 3:04:54 PM

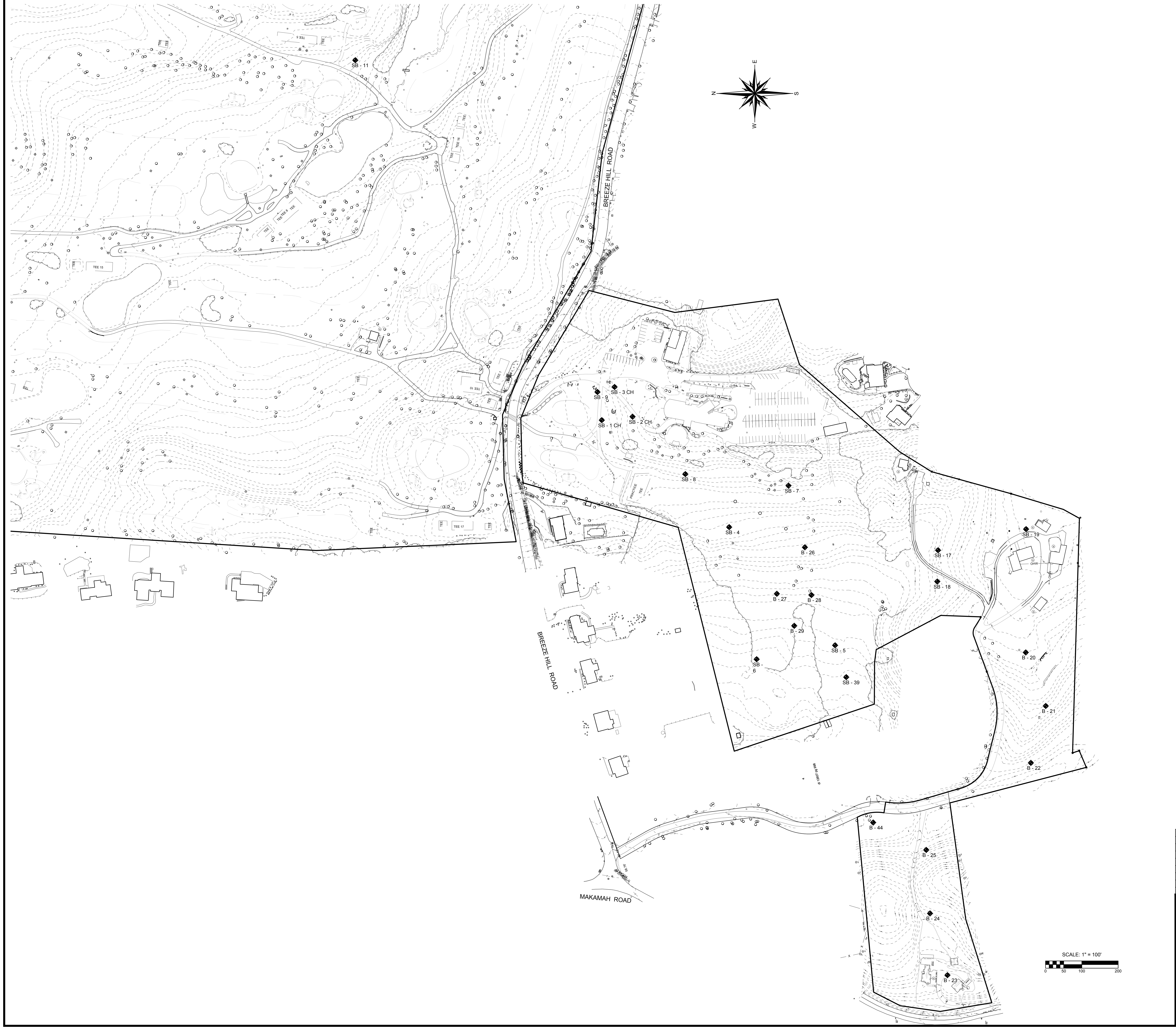
E
N
S
W
SB - 11
BREEZE HILL ROAD
TEE 15
TEE 17
TEE 10
TEE 18
SB - 3 CH
SB - 9
SB - 1 CH
SB - 2 CH
SB - 8
SB - 7
SB - 4
SB - 26
B - 27
B - 28
B - 29
SB - 5
SB - 6
SB - 39
SB - 19
SB - 17
SB - 18
B - 20
B - 21
B - 22
B - 44
B - 25
B - 24
B - 23
BREEZE HILL ROAD
MAKAMAH ROAD
SCALE: 1" = 100'
0
50
100
200

FOR TOWN USE

No.	REVISION	DATE

OWNER
I.H.C.C., INC. AND
ROBERG REVOCABLE TRUST
21 BREEZE HILL ROAD
NORTHPORT, NY, 11768
(631) 261 - 5700

APPLICANT:
THE PRESERVE AT INDIAN HILLS
1 RABRO DRIVE, SUITE 100
HAUPPAUGE, N.Y. 11788
(631) 351 - 4000

TEST BORING PLAN - SOUTH PARCEL

FOR

THE PRESERVE AT INDIAN HILLS

SITUATED AT

NORTHPORT

TOWN OF HUNTINGTON, SUFFOLK COUNTY, NEW YORK
S.C.T.M.: DISTRICT: 0400, SECT. 014, BLK. 04, LOTS 1 AND 2
DISTRICT 0400, SECT. 015, BLK. 01, LOTS 3.1, 3.2, 11, 12, 16, 19 AND P/O 22

THOMAS CHARLES DIXON
080916

NELSON + POPE
engineers • architects • surveyors
70 Maxess Road, Melville, NY 11747 • 631.427.5665 • nelsonpope.com

DRAWN BY: GEO	**CADD No.:** 86047 CSP TB_LOGS 2021.DWG	**SCALE:**	**DRAWING NO.:**	
CHECKED BY: JM	**FILE NO.:** 400-014	1"=100'	TB - 102	
DATE: OCTOBER, 2021	**PROJECT NO.:** 86047		**SHEET NO.:** 41 OF 44	

G:\projects\86047\FINALS\CONDOMINIUM\86047 CSP TB_LOGS 2021.dwg, 41 OF 44 TEST BORING PLAN - SOUTH PARCEL, 10/11/2021 3:05:49 PM

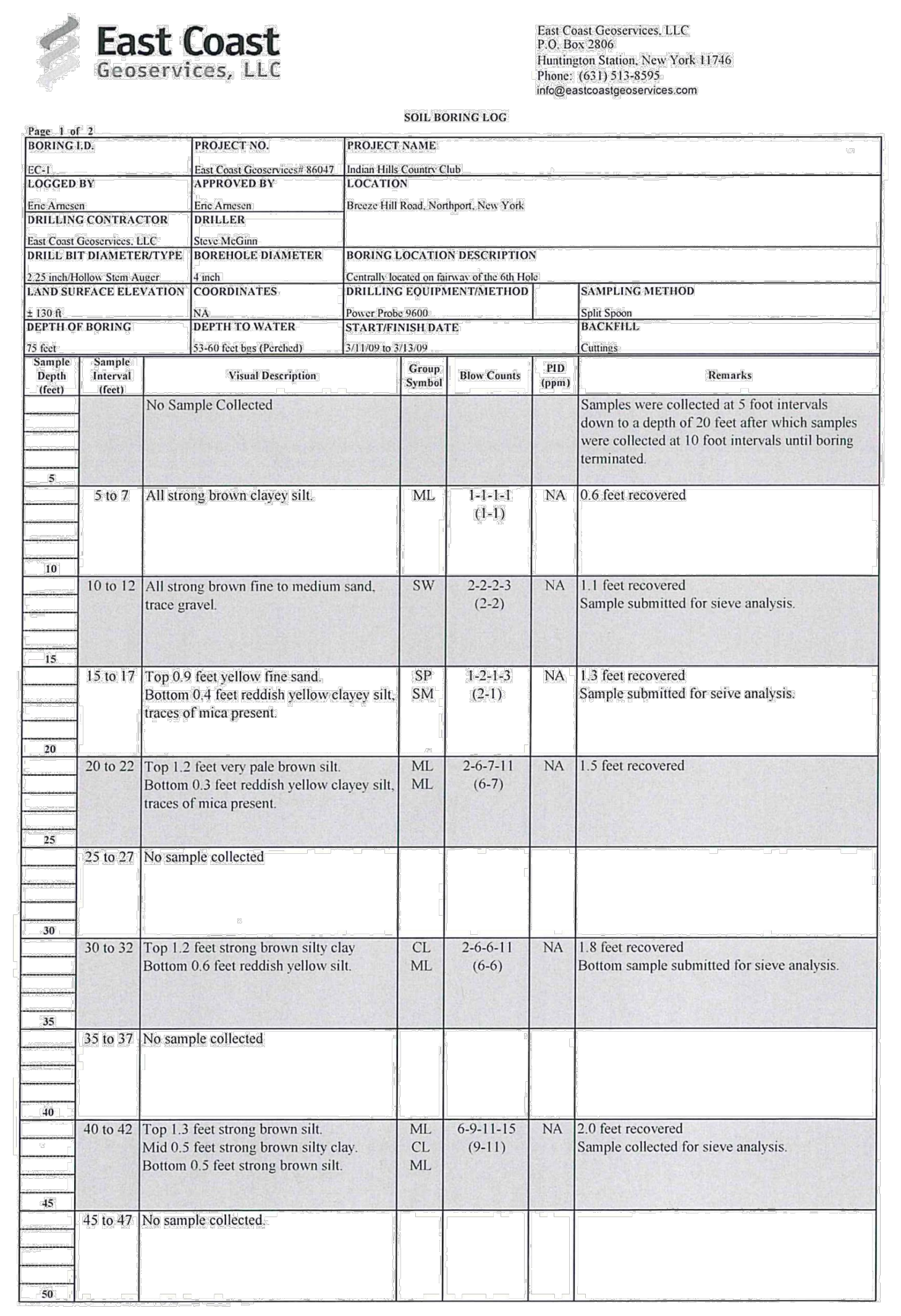

East Coast Geoservices, LLC
P.O. Box 2806
Huntington Station, New York 11746
Phone: (631) 513-8595
info@eastcoastgeoservices.com

SOIL BORING LOG

Page 1 of 2

BORING I.D. EC-1	PROJECT NO. East Coast Geoservices# 86047	PROJECT NAME Indian Hills Country Club	
LOGGED BY Eric Arnesen	APPROVED BY Eric Arnesen	LOCATION Breeze Hill Road, Northport, New York	
DRILLING CONTRACTOR East Coast Geoservices, LLC	DRILLER Steve McGinn		
DRILL BIT DIAMETER/TYPE 2.25 inch/Hollow Stem Auger	BOREHOLE DIAMETER 4 inch	BORING LOCATION DESCRIPTION Centrally located on fairway of the 6th Hole	
LAND SURFACE ELEVATION ± 130 ft	COORDINATES NA	DRILLING EQUIPMENT/METHOD Power Probe 9600	SAMPLING METHOD Split Spoon
DEPTH OF BORING 75 feet	DEPTH TO WATER 53-60 feet bgs (Perched)	START/FINISH DATE 3/11/09 to 3/13/09	BACKFILL Cuttings

Sample Depth (feet)	Sample Interval (feet)	Visual Description	Group Symbol	Blow Counts	PID (ppm)	Remarks
5		No Sample Collected				Samples were collected at 5 foot intervals down to a depth of 20 feet after which samples were collected at 10 foot intervals until boring terminated.
10	5 to 7	All strong brown clayey silt.	ML	1-1-1-1 (1-1)	NA	0.6 feet recovered
15	10 to 12	All strong brown fine to medium sand, trace gravel.	SW	2-2-2-3 (2-2)	NA	1.1 feet recovered Sample submitted for sieve analysis.
20	15 to 17	Top 0.9 feet yellow fine sand. Bottom 0.4 feet reddish yellow clayey silt, traces of mica present.	SP SM	1-2-1-3 (2-1)	NA	1.3 feet recovered Sample submitted for seive analysis.
25	20 to 22	Top 1.2 feet very pale brown silt. Bottom 0.3 feet reddish yellow clayey silt, traces of mica present.	ML ML	2-6-7-11 (6-7)	NA	1.5 feet recovered
30	25 to 27	No sample collected				
35	30 to 32	Top 1.2 feet strong brown silty clay Bottom 0.6 feet reddish yellow silt.	CL ML	2-6-6-11 (6-6)	NA	1.8 feet recovered Bottom sample submitted for sieve analysis.
40	35 to 37	No sample collected				
45	40 to 42	Top 1.3 feet strong brown silt. Mid 0.5 feet strong brown silty clay. Bottom 0.5 feet strong brown silt.	ML CL ML	6-9-11-15 (9-11)	NA	2.0 feet recovered Sample collected for sieve analysis.
50	45 to 47	No sample collected.				

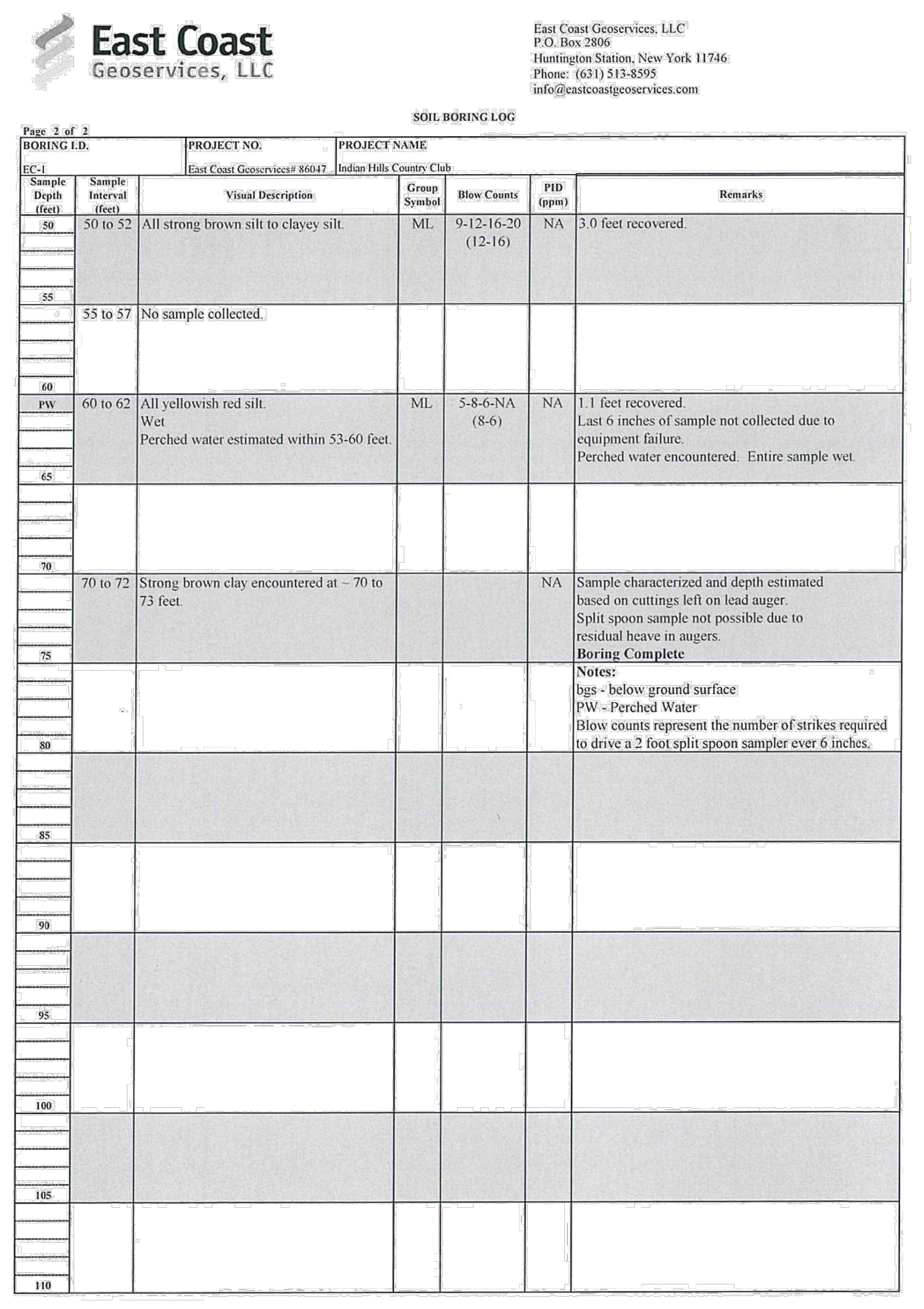

East Coast Geoservices, LLC
P.O. Box 2806
Huntington Station, New York 11746
Phone: (631) 513-8595
info@eastcoastgeoservices.com

SOIL BORING LOG

Page 2 of 2

BORING I.D. EC-1	PROJECT NO. East Coast Geoservices# 86047	PROJECT NAME Indian Hills Country Club

Sample Depth (feet)	Sample Interval (feet)	Visual Description	Group Symbol	Blow Counts	PID (ppm)	Remarks
50 55	50 to 52	All strong brown silt to clayey silt.	ML	9-12-16-20 (12-16)	NA	3.0 feet recovered.
60	55 to 57	No sample collected.				
PW 65	60 to 62	All yellowish red silt. Wet Perched water estimated within 53-60 feet.	ML	5-8-6-NA (8-6)	NA	1.1 feet recovered. Last 6 inches of sample not collected due to equipment failure. Perched water encountered. Entire sample wet.
70						
75	70 to 72	Strong brown clay encountered at ~ 70 to 73 feet.			NA	Sample characterized and depth estimated based on cuttings left on lead auger. Split spoon sample not possible due to residual heave in augers. **Boring Complete**
80						**Notes:** bgs - below ground surface PW - Perched Water Blow counts represent the number of strikes required to drive a 2 foot split spoon sampler ever 6 inches.
85						
90						
95						
100						
105						
110						

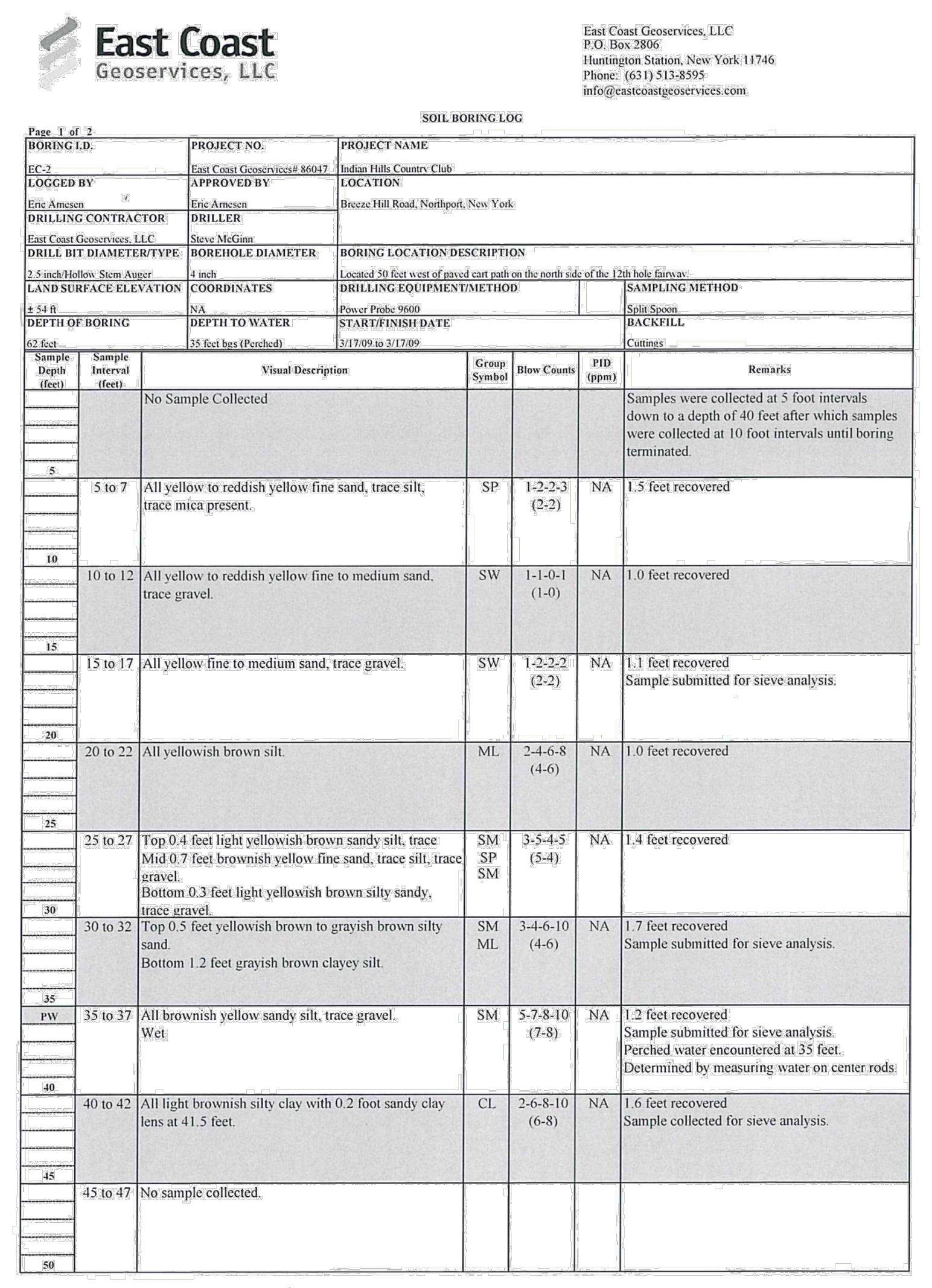

East Coast Geoservices, LLC
P.O. Box 2806
Huntington Station, New York 11746
Phone: (631) 513-8595
info@eastcoastgeoservices.com

SOIL BORING LOG

Page 1 of 2

BORING I.D. EC-2	PROJECT NO. East Coast Geoservices# 86047	PROJECT NAME Indian Hills Country Club	
LOGGED BY Eric Arnesen	APPROVED BY Eric Arnesen	LOCATION Breeze Hill Road, Northport, New York	
DRILLING CONTRACTOR East Coast Geoservices, LLC	DRILLER Steve McGinn		
DRILL BIT DIAMETER/TYPE 2.5 inch/Hollow Stem Auger	BOREHOLE DIAMETER 4 inch	BORING LOCATION DESCRIPTION Located 50 feet west of paved cart path on the north side of the 12th hole fairway.	
LAND SURFACE ELEVATION ± 54 ft	COORDINATES NA	DRILLING EQUIPMENT/METHOD Power Probe 9600	SAMPLING METHOD Split Spoon
DEPTH OF BORING 62 feet	DEPTH TO WATER 35 feet bgs (Perched)	START/FINISH DATE 3/17/09 to 3/17/09	BACKFILL Cuttings

Sample Depth (feet)	Sample Interval (feet)	Visual Description	Group Symbol	Blow Counts	PID (ppm)	Remarks
5		No Sample Collected				Samples were collected at 5 foot intervals down to a depth of 40 feet after which samples were collected at 10 foot intervals until boring terminated.
10	5 to 7	All yellow to reddish yellow fine sand, trace silt, trace mica present.	SP	1-2-2-3 (2-2)	NA	1.5 feet recovered
15	10 to 12	All yellow to reddish yellow fine to medium sand, trace gravel.	SW	1-1-0-1 (1-0)	NA	1.0 feet recovered
20	15 to 17	All yellow fine to medium sand, trace gravel.	SW	1-2-2-2 (2-2)	NA	1.1 feet recovered Sample submitted for sieve analysis.
25	20 to 22	All yellowish brown silt.	ML	2-4-6-8 (4-6)	NA	1.0 feet recovered
30	25 to 27	Top 0.4 feet light yellowish brown sandy silt, trace Mid 0.7 feet brownish yellow fine sand, trace silt, trace gravel. Bottom 0.3 feet light yellowish brown silty sandy, trace gravel.	SM SP SM	3-5-4-5 (5-4)	NA	1.4 feet recovered
35	30 to 32	Top 0.5 feet yellowish brown to grayish brown silty sand. Bottom 1.2 feet grayish brown clayey silt.	SM ML	3-4-6-10 (4-6)	NA	1.7 feet recovered Sample submitted for sieve analysis.
PW 40	35 to 37	All brownish yellow sandy silt, trace gravel. Wet	SM	5-7-8-10 (7-8)	NA	1.2 feet recovered Sample submitted for sieve analysis. Perched water encountered at 35 feet. Determined by measuring water on center rods.
45	40 to 42	All light brownish silty clay with 0.2 foot sandy clay lens at 41.5 feet.	CL	2-6-8-10 (6-8)	NA	1.6 feet recovered Sample collected for sieve analysis.
50	45 to 47	No sample collected.				

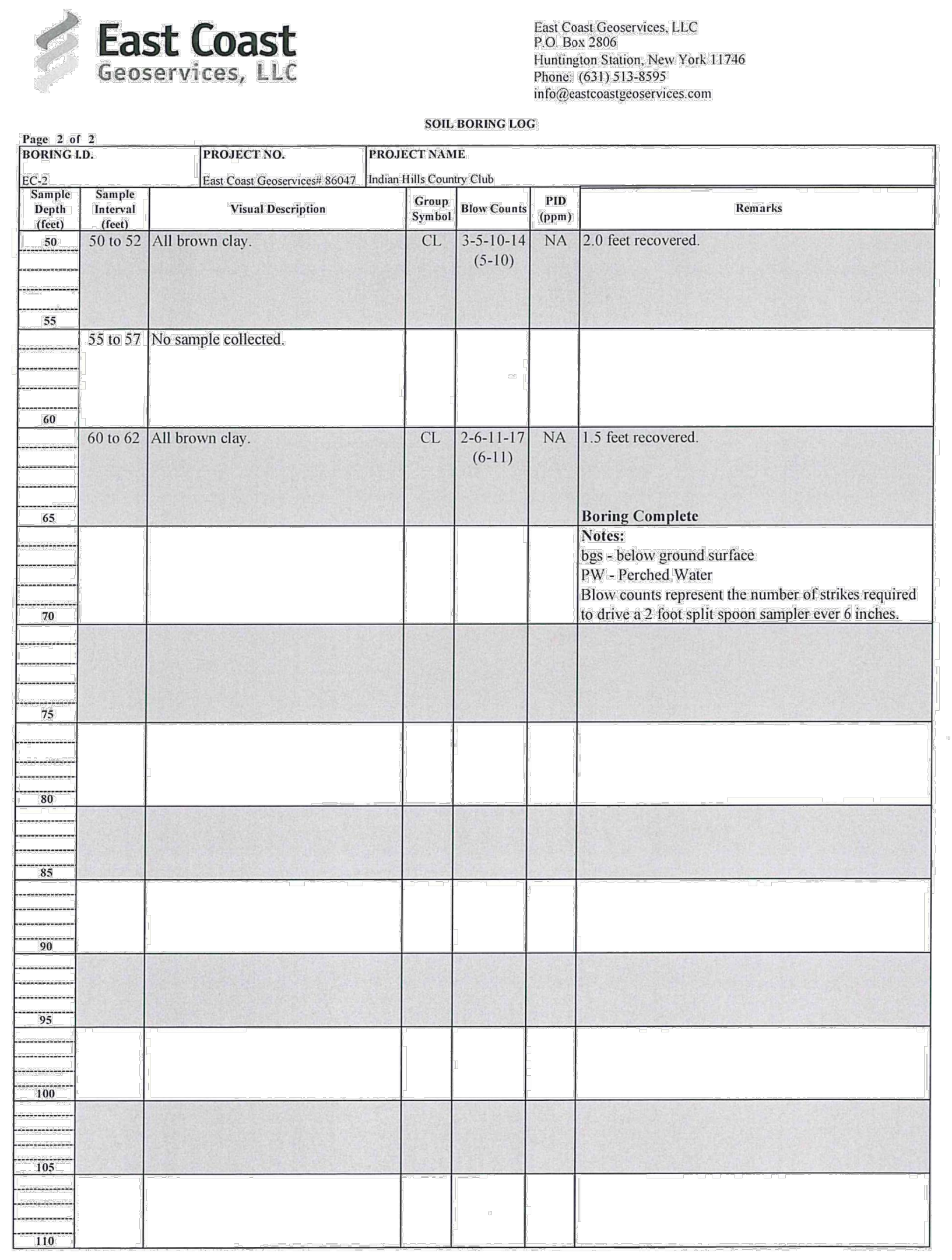

East Coast Geoservices, LLC
P.O. Box 2806
Huntington Station, New York 11746
Phone: (631) 513-8595
info@eastcoastgeoservices.com

SOIL BORING LOG

Page 2 of 2

BORING I.D. EC-2	PROJECT NO. East Coast Geoservices# 86047	PROJECT NAME Indian Hills Country Club

Sample Depth (feet)	Sample Interval (feet)	Visual Description	Group Symbol	Blow Counts	PID (ppm)	Remarks
50 55	50 to 52	All brown clay.	CL	3-5-10-14 (5-10)	NA	2.0 feet recovered.
60	55 to 57	No sample collected.				
65	60 to 62	All brown clay.	CL	2-6-11-17 (6-11)	NA	1.5 feet recovered. **Boring Complete**
70						**Notes:** bgs - below ground surface PW - Perched Water Blow counts represent the number of strikes required to drive a 2 foot split spoon sampler ever 6 inches.
75						
80						
85						
90						
95						
100						
105						
110						

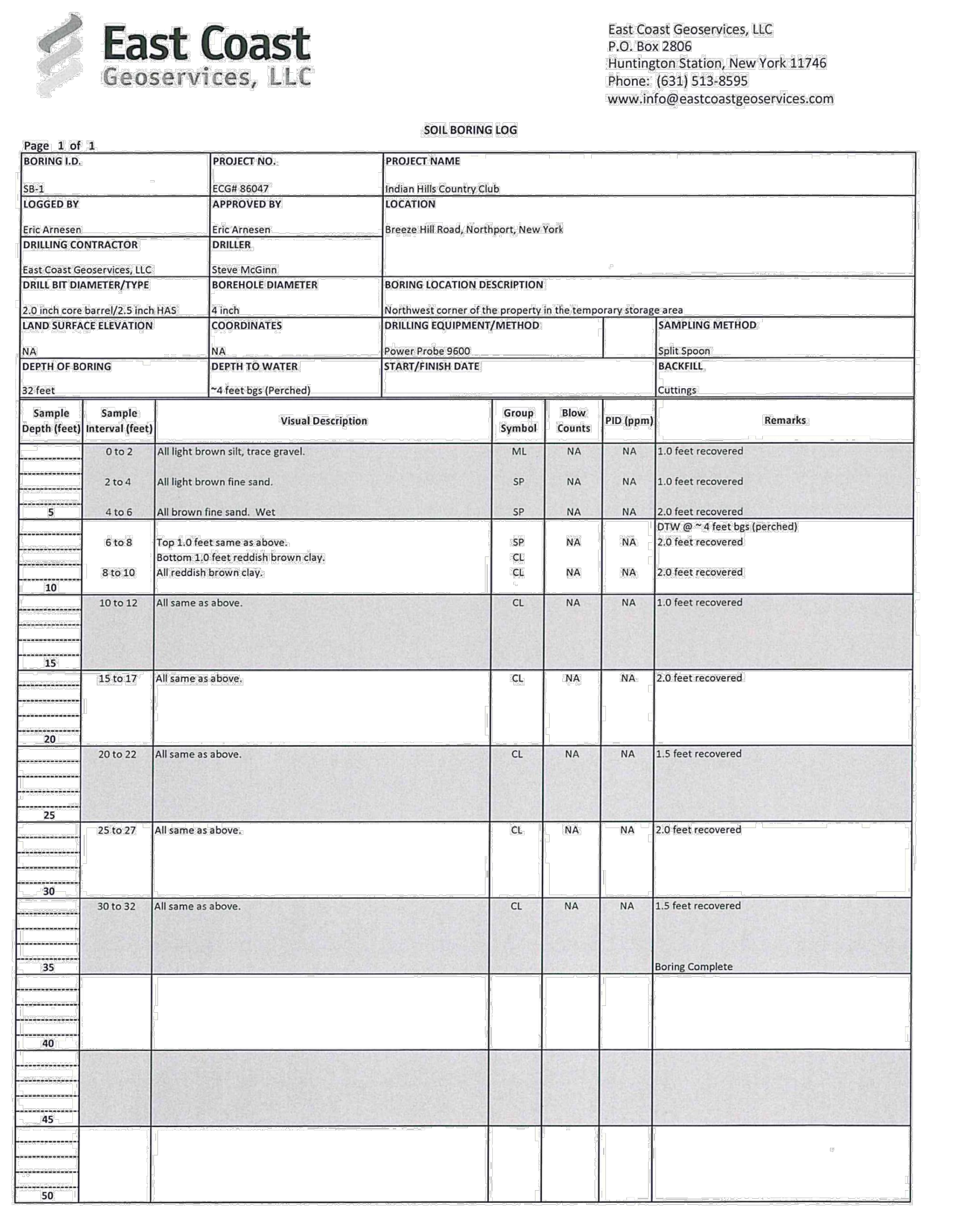

East Coast Geoservices, LLC
P.O. Box 2806
Huntington Station, New York 11746
Phone: (631) 513-8595
www.info@eastcoastgeoservices.com

SOIL BORING LOG

Page 1 of 1

BORING I.D. SB-1	PROJECT NO. ECG# 86047	PROJECT NAME Indian Hills Country Club	
LOGGED BY Eric Arnesen	APPROVED BY Eric Arnesen	LOCATION Breeze Hill Road, Northport, New York	
DRILLING CONTRACTOR East Coast Geoservices, LLC	DRILLER Steve McGinn		
DRILL BIT DIAMETER/TYPE 2.0 inch core barrel/2.5 inch HAS	BOREHOLE DIAMETER 4 inch	BORING LOCATION DESCRIPTION Northwest corner of the property in the temporary storage area	
LAND SURFACE ELEVATION NA	COORDINATES NA	DRILLING EQUIPMENT/METHOD Power Probe 9600	SAMPLING METHOD Split Spoon
DEPTH OF BORING 32 feet	DEPTH TO WATER ~4 feet bgs (Perched)	START/FINISH DATE	BACKFILL Cuttings

Sample Depth (feet)	Sample Interval (feet)	Visual Description	Group Symbol	Blow Counts	PID (ppm)	Remarks
	0 to 2	All light brown silt, trace gravel.	ML	NA	NA	1.0 feet recovered
	2 to 4	All light brown fine sand.	SP	NA	NA	1.0 feet recovered
5	4 to 6	All brown fine sand. Wet	SP	NA	NA	2.0 feet recovered
						DTW @ ~4 feet bgs (perched)
	6 to 8	Top 1.0 feet same as above. Bottom 1.0 feet reddish brown clay.	SP CL	NA	NA	2.0 feet recovered
10	8 to 10	All reddish brown clay.	CL	NA	NA	2.0 feet recovered
15	10 to 12	All same as above.	CL	NA	NA	1.0 feet recovered
20	15 to 17	All same as above.	CL	NA	NA	2.0 feet recovered
25	20 to 22	All same as above.	CL	NA	NA	1.5 feet recovered
30	25 to 27	All same as above.	CL	NA	NA	2.0 feet recovered
35	30 to 32	All same as above.	CL	NA	NA	1.5 feet recovered Boring Complete
40						
45						
50						

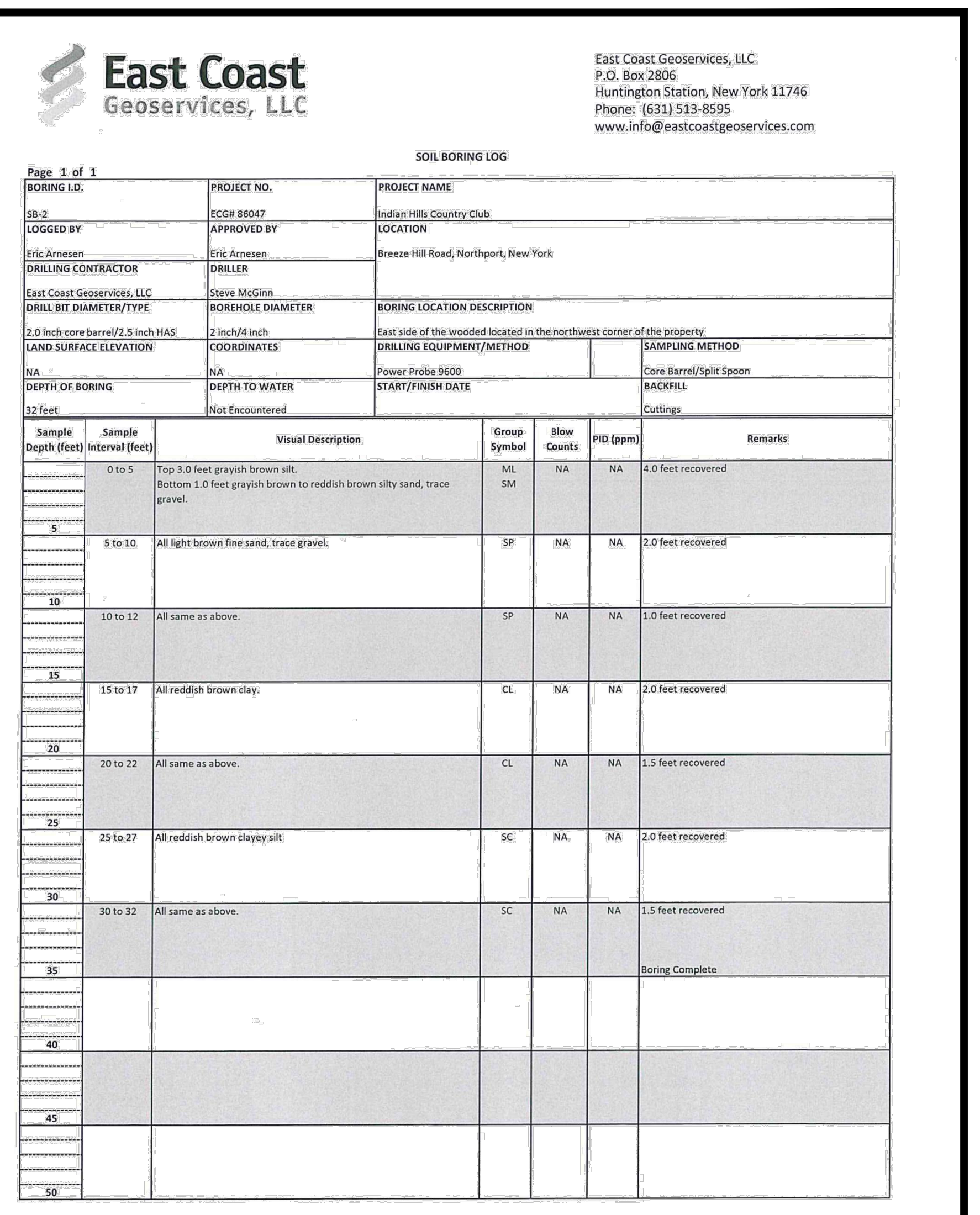

East Coast Geoservices, LLC
P.O. Box 2806
Huntington Station, New York 11746
Phone: (631) 513-8595
www.info@eastcoastgeoservices.com

SOIL BORING LOG

Page 1 of 1

BORING I.D. SB-2	PROJECT NO. ECG# 86047	PROJECT NAME Indian Hills Country Club	
LOGGED BY Eric Arnesen	APPROVED BY Eric Arnesen	LOCATION Breeze Hill Road, Northport, New York	
DRILLING CONTRACTOR East Coast Geoservices, LLC	DRILLER Steve McGinn		
DRILL BIT DIAMETER/TYPE 2.0 inch core barrel/2.5 inch HAS	BOREHOLE DIAMETER 2 inch/4 inch	BORING LOCATION DESCRIPTION East side of the wooded located in the northwest corner of the property	
LAND SURFACE ELEVATION NA	COORDINATES NA	DRILLING EQUIPMENT/METHOD Power Probe 9600	SAMPLING METHOD Core Barrel/Split Spoon
DEPTH OF BORING 32 feet	DEPTH TO WATER Not Encountered	START/FINISH DATE	BACKFILL Cuttings

Sample Depth (feet)	Sample Interval (feet)	Visual Description	Group Symbol	Blow Counts	PID (ppm)	Remarks
5	0 to 5	Top 3.0 feet grayish brown silt. Bottom 1.0 feet grayish brown to reddish brown silty sand, trace gravel.	ML SM	NA	NA	4.0 feet recovered
10	5 to 10	All light brown fine sand, trace gravel.	SP	NA	NA	2.0 feet recovered
15	10 to 12	All same as above.	SP	NA	NA	1.0 feet recovered
20	15 to 17	All reddish brown clay.	CL	NA	NA	2.0 feet recovered
25	20 to 22	All same as above.	CL	NA	NA	1.5 feet recovered
30	25 to 27	All reddish brown clayey silt	SC	NA	NA	2.0 feet recovered
35	30 to 32	All same as above.	SC	NA	NA	1.5 feet recovered Boring Complete
40						
45						
50						

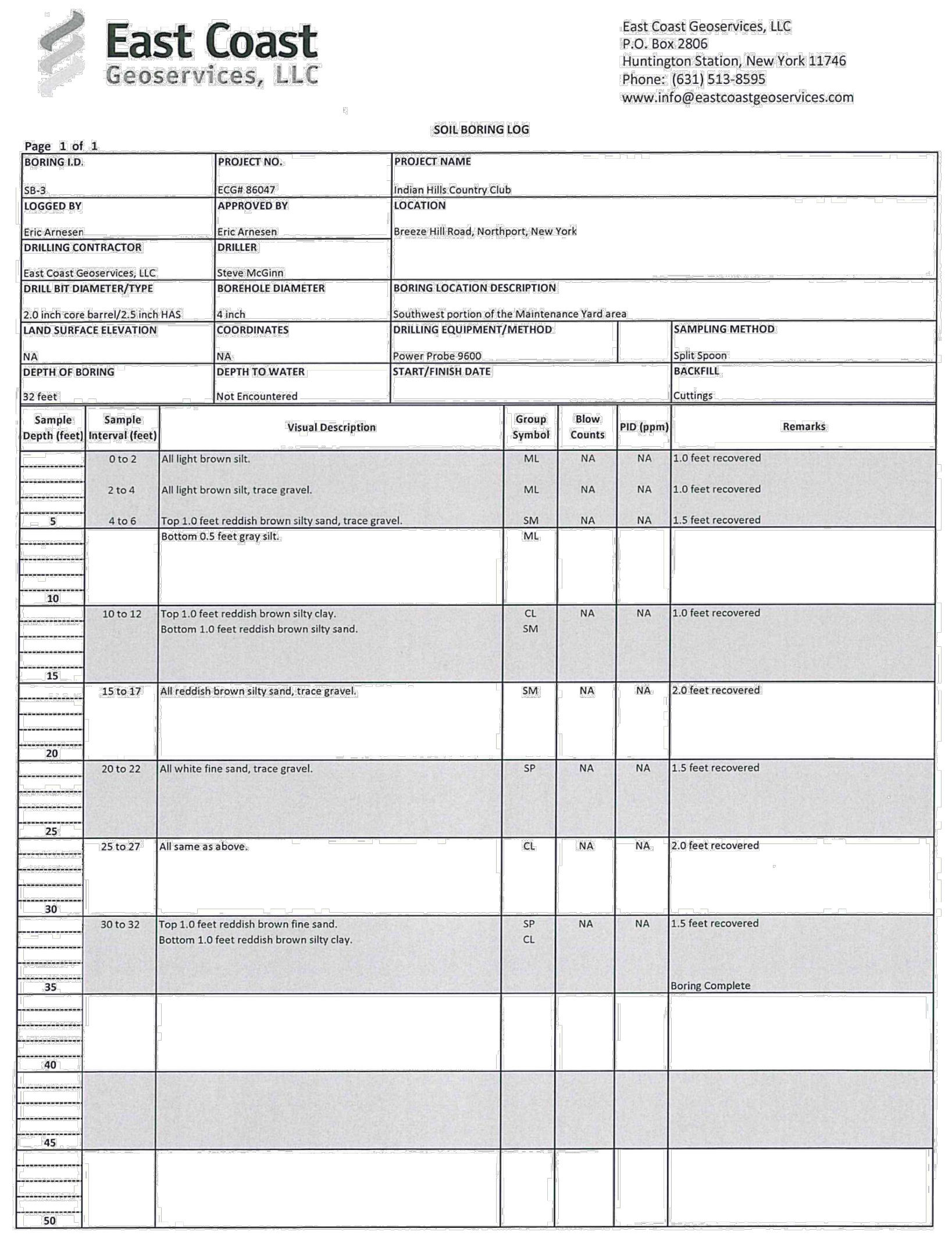

East Coast Geoservices, LLC
P.O. Box 2806
Huntington Station, New York 11746
Phone: (631) 513-8595
www.info@eastcoastgeoservices.com

SOIL BORING LOG

Page 1 of 1

BORING I.D. SB-3	PROJECT NO. ECG# 86047	PROJECT NAME Indian Hills Country Club	
LOGGED BY Eric Arnesen	APPROVED BY Eric Arnesen	LOCATION Breeze Hill Road, Northport, New York	
DRILLING CONTRACTOR East Coast Geoservices, LLC	DRILLER Steve McGinn		
DRILL BIT DIAMETER/TYPE 2.0 inch core barrel/2.5 inch HAS	BOREHOLE DIAMETER 4 inch	BORING LOCATION DESCRIPTION Southwest portion of the Maintenance Yard area	
LAND SURFACE ELEVATION NA	COORDINATES NA	DRILLING EQUIPMENT/METHOD Power Probe 9600	SAMPLING METHOD Split Spoon
DEPTH OF BORING 32 feet	DEPTH TO WATER Not Encountered	START/FINISH DATE	BACKFILL Cuttings

Sample Depth (feet)	Sample Interval (feet)	Visual Description	Group Symbol	Blow Counts	PID (ppm)	Remarks
	0 to 2	All light brown silt.	ML	NA	NA	1.0 feet recovered
	2 to 4	All light brown silt, trace gravel.	ML	NA	NA	1.0 feet recovered
5	4 to 6	Top 1.0 feet reddish brown silty sand, trace gravel.	SM	NA	NA	1.5 feet recovered
10		Bottom 0.5 feet gray silt.	ML			
15	10 to 12	Top 1.0 feet reddish brown silty clay. Bottom 1.0 feet reddish brown silty sand.	CL SM	NA	NA	1.0 feet recovered
20	15 to 17	All reddish brown silty sand, trace gravel.	SM	NA	NA	2.0 feet recovered
25	20 to 22	All white fine sand, trace gravel.	SP	NA	NA	1.5 feet recovered
30	25 to 27	All same as above.	CL	NA	NA	2.0 feet recovered
35	30 to 32	Top 1.0 feet reddish brown fine sand. Bottom 1.0 feet reddish brown silty clay.	SP CL	NA	NA	1.5 feet recovered Boring Complete
40						
45						
50						

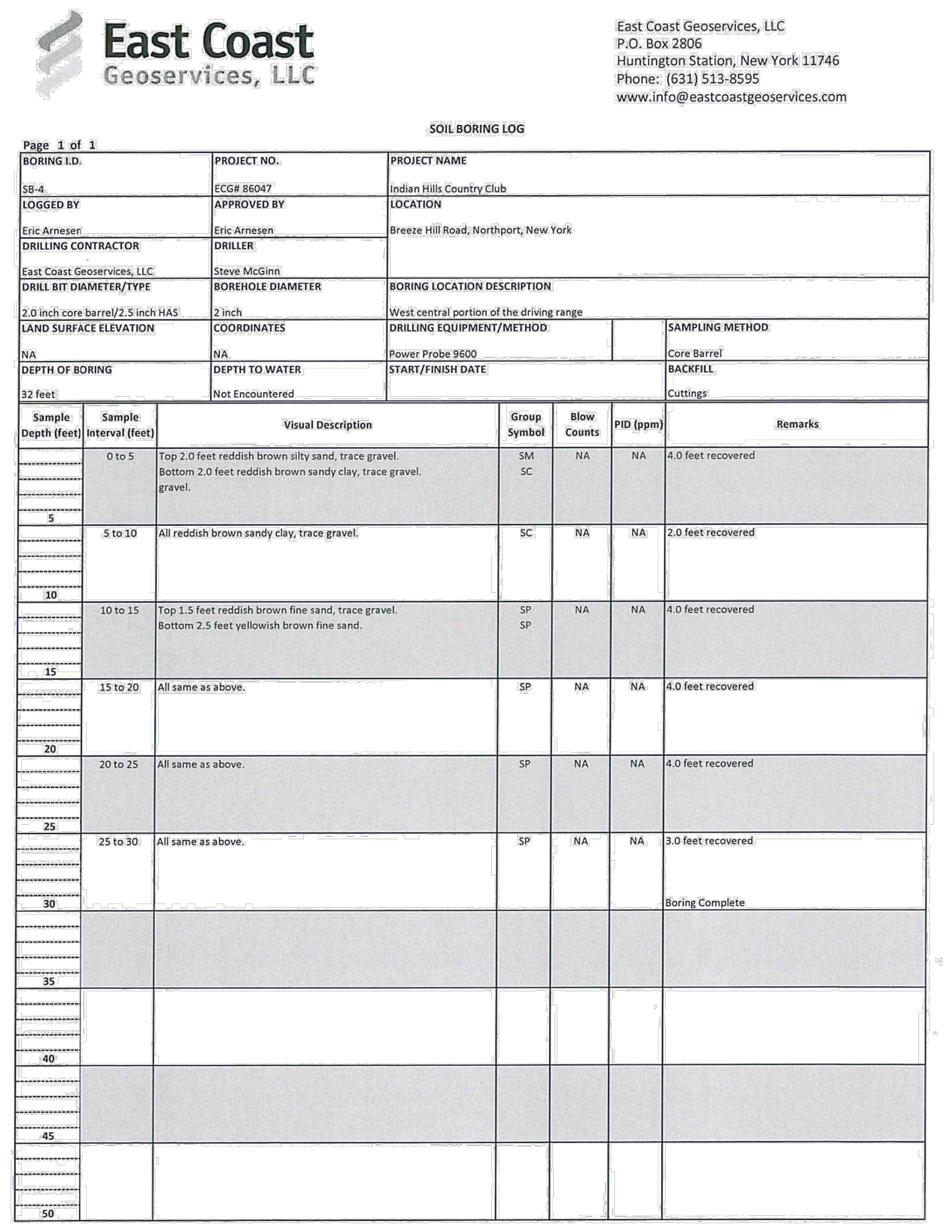

East Coast Geoservices, LLC
P.O. Box 2806
Huntington Station, New York 11746
Phone: (631) 513-8595
www.info@eastcoastgeoservices.com

SOIL BORING LOG

Page 1 of 1

BORING I.D. SB-4	PROJECT NO. ECG# 86047	PROJECT NAME Indian Hills Country Club	
LOGGED BY Eric Arnesen	APPROVED BY Eric Arnesen	LOCATION Breeze Hill Road, Northport, New York	
DRILLING CONTRACTOR East Coast Geoservices, LLC	DRILLER Steve McGinn		
DRILL BIT DIAMETER/TYPE 2.0 inch core barrel/2.5 inch HAS	BOREHOLE DIAMETER 2 inch	BORING LOCATION DESCRIPTION West central portion of the driving range	
LAND SURFACE ELEVATION NA	COORDINATES NA	DRILLING EQUIPMENT/METHOD Power Probe 9600	SAMPLING METHOD Core Barrel
DEPTH OF BORING 32 feet	DEPTH TO WATER Not Encountered	START/FINISH DATE	BACKFILL Cuttings

Sample Depth (feet)	Sample Interval (feet)	Visual Description	Group Symbol	Blow Counts	PID (ppm)	Remarks
5	0 to 5	Top 2.0 feet reddish brown silty sand, trace gravel. Bottom 2.0 feet reddish brown sandy clay, trace gravel.	SM SC	NA	NA	4.0 feet recovered
10	5 to 10	All reddish brown sandy clay, trace gravel.	SC	NA	NA	2.0 feet recovered
15	10 to 15	Top 1.5 feet reddish brown fine sand, trace gravel. Bottom 2.5 feet yellowish brown fine sand.	SP SP	NA	NA	4.0 feet recovered
20	15 to 20	All same as above.	SP	NA	NA	4.0 feet recovered
25	20 to 25	All same as above.	SP	NA	NA	4.0 feet recovered
30	25 to 30	All same as above.	SP	NA	NA	3.0 feet recovered Boring Complete
35						
40						
45						
50						

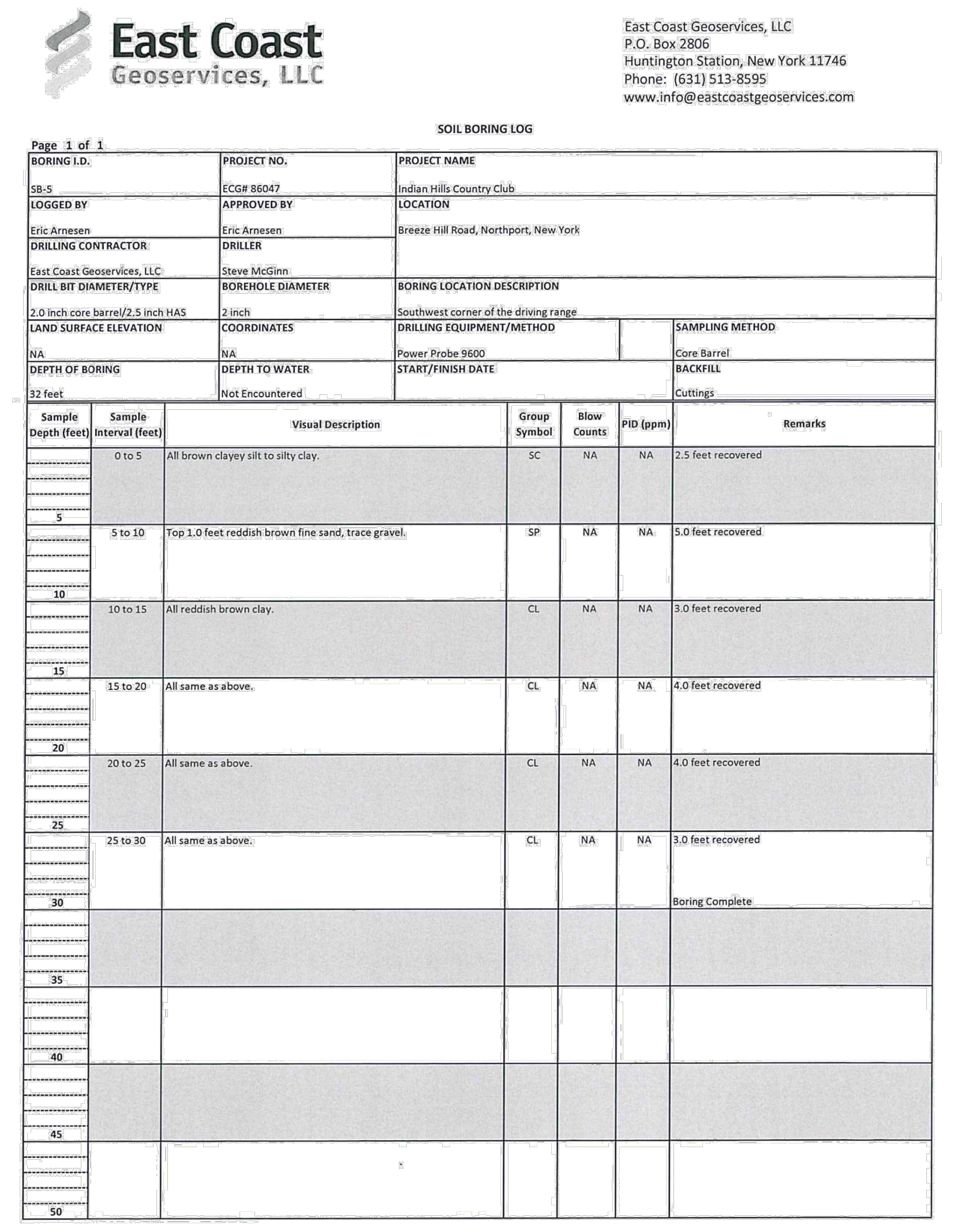

East Coast Geoservices, LLC
P.O. Box 2806
Huntington Station, New York 11746
Phone: (631) 513-8595
www.info@eastcoastgeoservices.com

SOIL BORING LOG

Page 1 of 1

BORING I.D. SB-5	PROJECT NO. ECG# 86047	PROJECT NAME Indian Hills Country Club	
LOGGED BY Eric Arnesen	APPROVED BY Eric Arnesen	LOCATION Breeze Hill Road, Northport, New York	
DRILLING CONTRACTOR East Coast Geoservices, LLC	DRILLER Steve McGinn		
DRILL BIT DIAMETER/TYPE 2.0 inch core barrel/2.5 inch HAS	BOREHOLE DIAMETER 2 inch	BORING LOCATION DESCRIPTION Southwest corner of the driving range	
LAND SURFACE ELEVATION NA	COORDINATES NA	DRILLING EQUIPMENT/METHOD Power Probe 9600	SAMPLING METHOD Core Barrel
DEPTH OF BORING 32 feet	DEPTH TO WATER Not Encountered	START/FINISH DATE	BACKFILL Cuttings

Sample Depth (feet)	Sample Interval (feet)	Visual Description	Group Symbol	Blow Counts	PID (ppm)	Remarks
5	0 to 5	All brown clayey silt to silty clay.	SC	NA	NA	2.5 feet recovered
10	5 to 10	Top 1.0 feet reddish brown fine sand, trace gravel.	SP	NA	NA	5.0 feet recovered
15	10 to 15	All reddish brown clay.	CL	NA	NA	3.0 feet recovered
20	15 to 20	All same as above.	CL	NA	NA	4.0 feet recovered
25	20 to 25	All same as above.	CL	NA	NA	4.0 feet recovered
30	25 to 30	All same as above.	CL	NA	NA	3.0 feet recovered Boring Complete
35						
40						
45						
50						

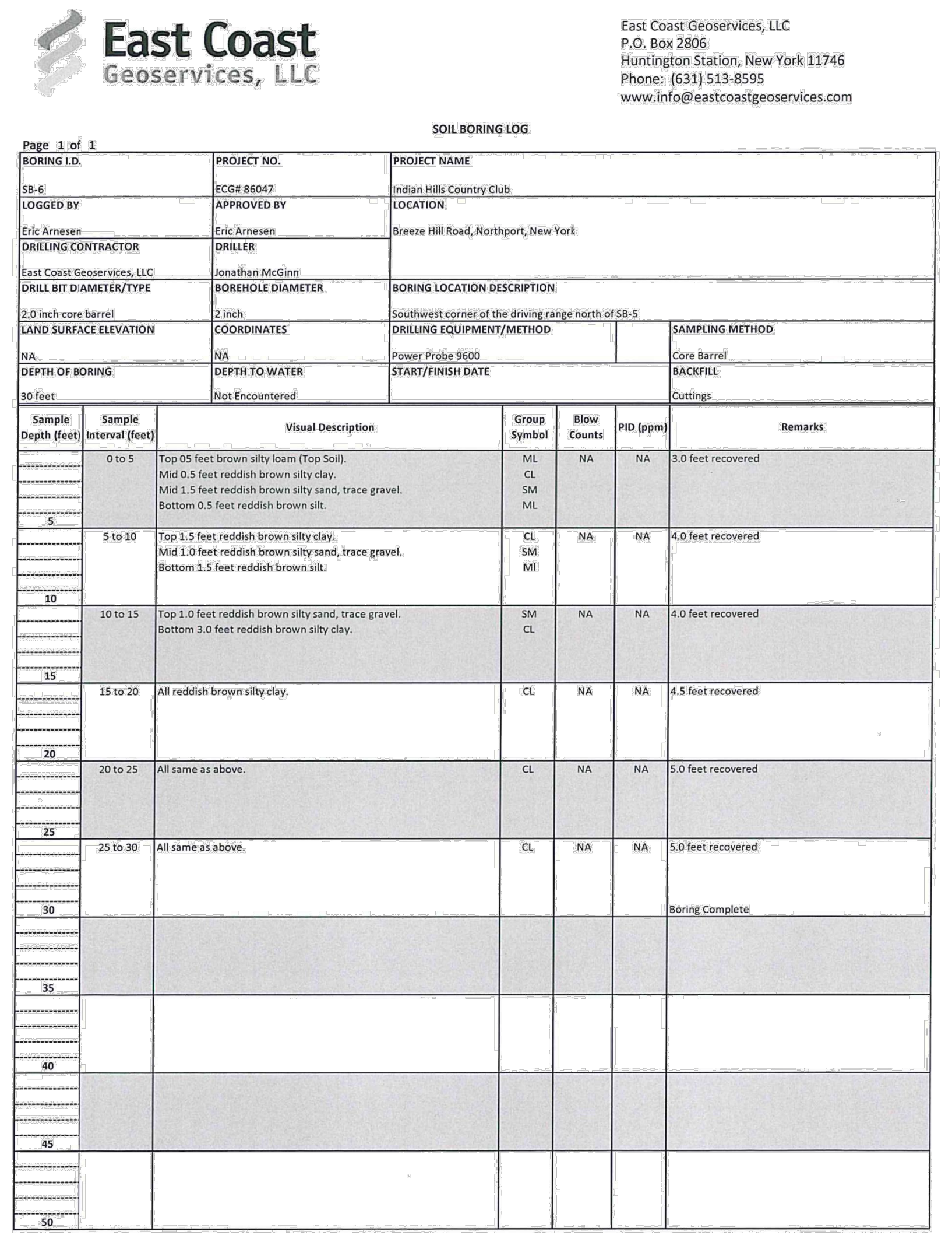

East Coast Geoservices, LLC
P.O. Box 2806
Huntington Station, New York 11746
Phone: (631) 513-8595
www.info@eastcoastgeoservices.com

SOIL BORING LOG

Page 1 of 1

BORING I.D. SB-6	PROJECT NO. ECG# 86047	PROJECT NAME Indian Hills Country Club	
LOGGED BY Eric Arnesen	APPROVED BY Eric Arnesen	LOCATION Breeze Hill Road, Northport, New York	
DRILLING CONTRACTOR East Coast Geoservices, LLC	DRILLER Jonathan McGinn		
DRILL BIT DIAMETER/TYPE 2.0 inch core barrel	BOREHOLE DIAMETER 2 inch	BORING LOCATION DESCRIPTION Southwest corner of the driving range north of SB-5	
LAND SURFACE ELEVATION NA	COORDINATES NA	DRILLING EQUIPMENT/METHOD Power Probe 9600	SAMPLING METHOD Core Barrel
DEPTH OF BORING 30 feet	DEPTH TO WATER Not Encountered	START/FINISH DATE	BACKFILL Cuttings

Sample Depth (feet)	Sample Interval (feet)	Visual Description	Group Symbol	Blow Counts	PID (ppm)	Remarks
5	0 to 5	Top 05 feet brown silty loam (Top Soil). Mid 0.5 feet reddish brown silty clay. Mid 1.5 feet reddish brown silty sand, trace gravel. Bottom 0.5 feet reddish brown silt.	ML CL SM ML	NA	NA	3.0 feet recovered
10	5 to 10	Top 1.5 feet reddish brown silty clay. Mid 1.0 feet reddish brown silty sand, trace gravel. Bottom 1.5 feet reddish brown silt.	CL SM Ml	NA	NA	4.0 feet recovered
15	10 to 15	Top 1.0 feet reddish brown silty sand, trace gravel. Bottom 3.0 feet reddish brown silty clay.	SM CL	NA	NA	4.0 feet recovered
20	15 to 20	All reddish brown silty clay.	CL	NA	NA	4.5 feet recovered
25	20 to 25	All same as above.	CL	NA	NA	5.0 feet recovered
30	25 to 30	All same as above.	CL	NA	NA	5.0 feet recovered Boring Complete
35						
40						
45						
50						

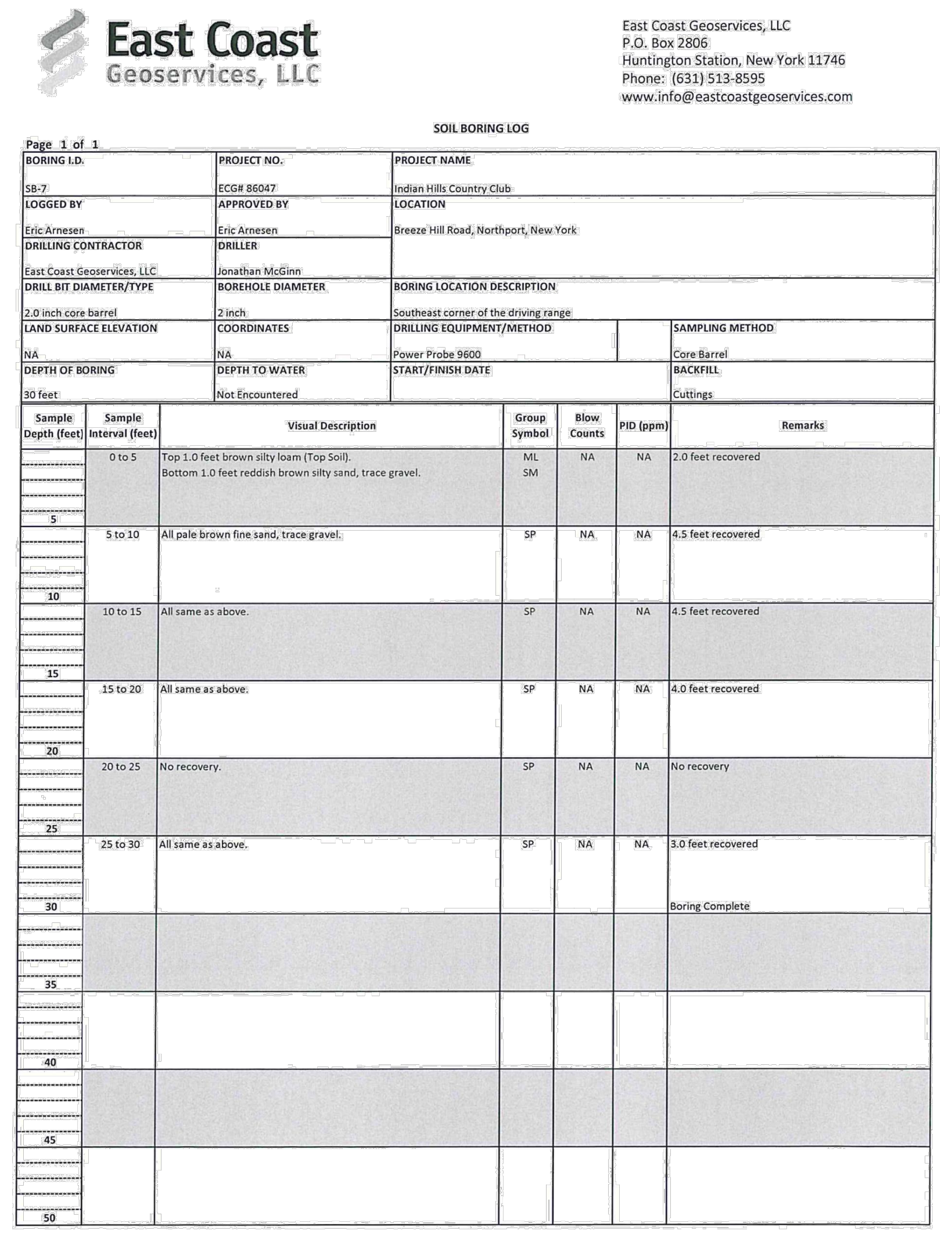

East Coast Geoservices, LLC
P.O. Box 2806
Huntington Station, New York 11746
Phone: (631) 513-8595
www.info@eastcoastgeoservices.com

SOIL BORING LOG

Page 1 of 1

BORING I.D. SB-7	PROJECT NO. ECG# 86047	PROJECT NAME Indian Hills Country Club	
LOGGED BY Eric Arnesen	APPROVED BY Eric Arnesen	LOCATION Breeze Hill Road, Northport, New York	
DRILLING CONTRACTOR East Coast Geoservices, LLC	DRILLER Jonathan McGinn		
DRILL BIT DIAMETER/TYPE 2.0 inch core barrel	BOREHOLE DIAMETER 2 inch	BORING LOCATION DESCRIPTION Southeast corner of the driving range	
LAND SURFACE ELEVATION NA	COORDINATES NA	DRILLING EQUIPMENT/METHOD Power Probe 9600	SAMPLING METHOD Core Barrel
DEPTH OF BORING 30 feet	DEPTH TO WATER Not Encountered	START/FINISH DATE	BACKFILL Cuttings

Sample Depth (feet)	Sample Interval (feet)	Visual Description	Group Symbol	Blow Counts	PID (ppm)	Remarks
5	0 to 5	Top 1.0 feet brown silty loam (Top Soil). Bottom 1.0 feet reddish brown silty sand, trace gravel.	ML SM	NA	NA	2.0 feet recovered
10	5 to 10	All pale brown fine sand, trace gravel.	SP	NA	NA	4.5 feet recovered
15	10 to 15	All same as above.	SP	NA	NA	4.5 feet recovered
20	15 to 20	All same as above.	SP	NA	NA	4.0 feet recovered
25	20 to 25	No recovery.	SP	NA	NA	No recovery
30	25 to 30	All same as above.	SP	NA	NA	3.0 feet recovered Boring Complete
35						
40						
45						
50						

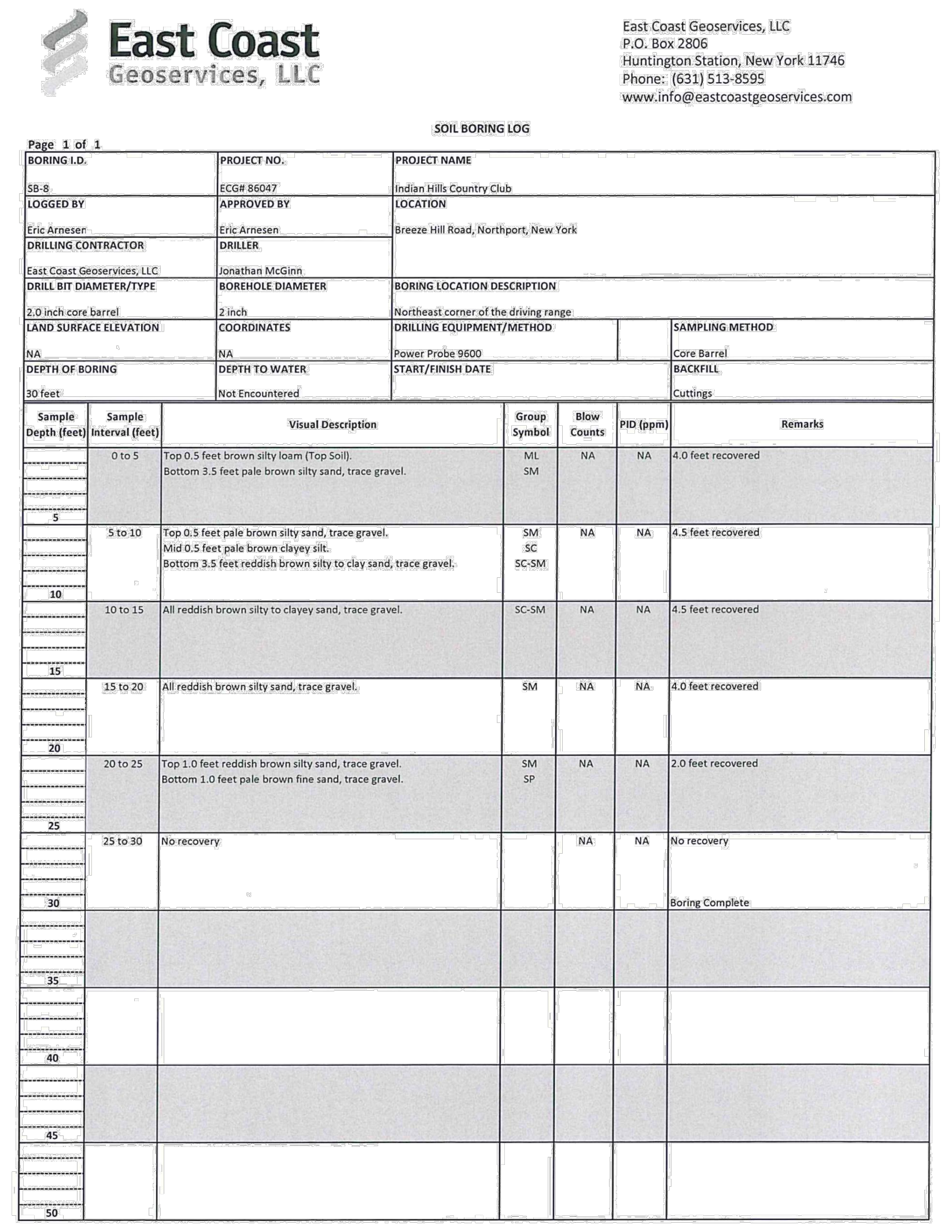

East Coast Geoservices, LLC
P.O. Box 2806
Huntington Station, New York 11746
Phone: (631) 513-8595
www.info@eastcoastgeoservices.com

SOIL BORING LOG

Page 1 of 1

BORING I.D. SB-8	PROJECT NO. ECG# 86047	PROJECT NAME Indian Hills Country Club	
LOGGED BY Eric Arnesen	APPROVED BY Eric Arnesen	LOCATION Breeze Hill Road, Northport, New York	
DRILLING CONTRACTOR East Coast Geoservices, LLC	DRILLER Jonathan McGinn		
DRILL BIT DIAMETER/TYPE 2.0 inch core barrel	BOREHOLE DIAMETER 2 inch	BORING LOCATION DESCRIPTION Northeast corner of the driving range	
LAND SURFACE ELEVATION NA	COORDINATES NA	DRILLING EQUIPMENT/METHOD Power Probe 9600	SAMPLING METHOD Core Barrel
DEPTH OF BORING 30 feet	DEPTH TO WATER Not Encountered	START/FINISH DATE	BACKFILL Cuttings

Sample Depth (feet)	Sample Interval (feet)	Visual Description	Group Symbol	Blow Counts	PID (ppm)	Remarks
5	0 to 5	Top 0.5 feet brown silty loam (Top Soil). Bottom 3.5 feet pale brown silty sand, trace gravel.	ML SM	NA	NA	4.0 feet recovered
10	5 to 10	Top 0.5 feet pale brown silty sand, trace gravel. Mid 0.5 feet pale brown clayey silt. Bottom 3.5 feet reddish brown silty to clay sand, trace gravel.	SM SC SC-SM	NA	NA	4.5 feet recovered
15	10 to 15	All reddish brown silty to clayey sand, trace gravel.	SC-SM	NA	NA	4.5 feet recovered
20	15 to 20	All reddish brown silty sand, trace gravel.	SM	NA	NA	4.0 feet recovered
25	20 to 25	Top 1.0 feet reddish brown silty sand, trace gravel. Bottom 1.0 feet pale brown fine sand, trace gravel.	SM SP	NA	NA	2.0 feet recovered
30	25 to 30	No recovery		NA	NA	No recovery Boring Complete
35						
40						
45						
50						

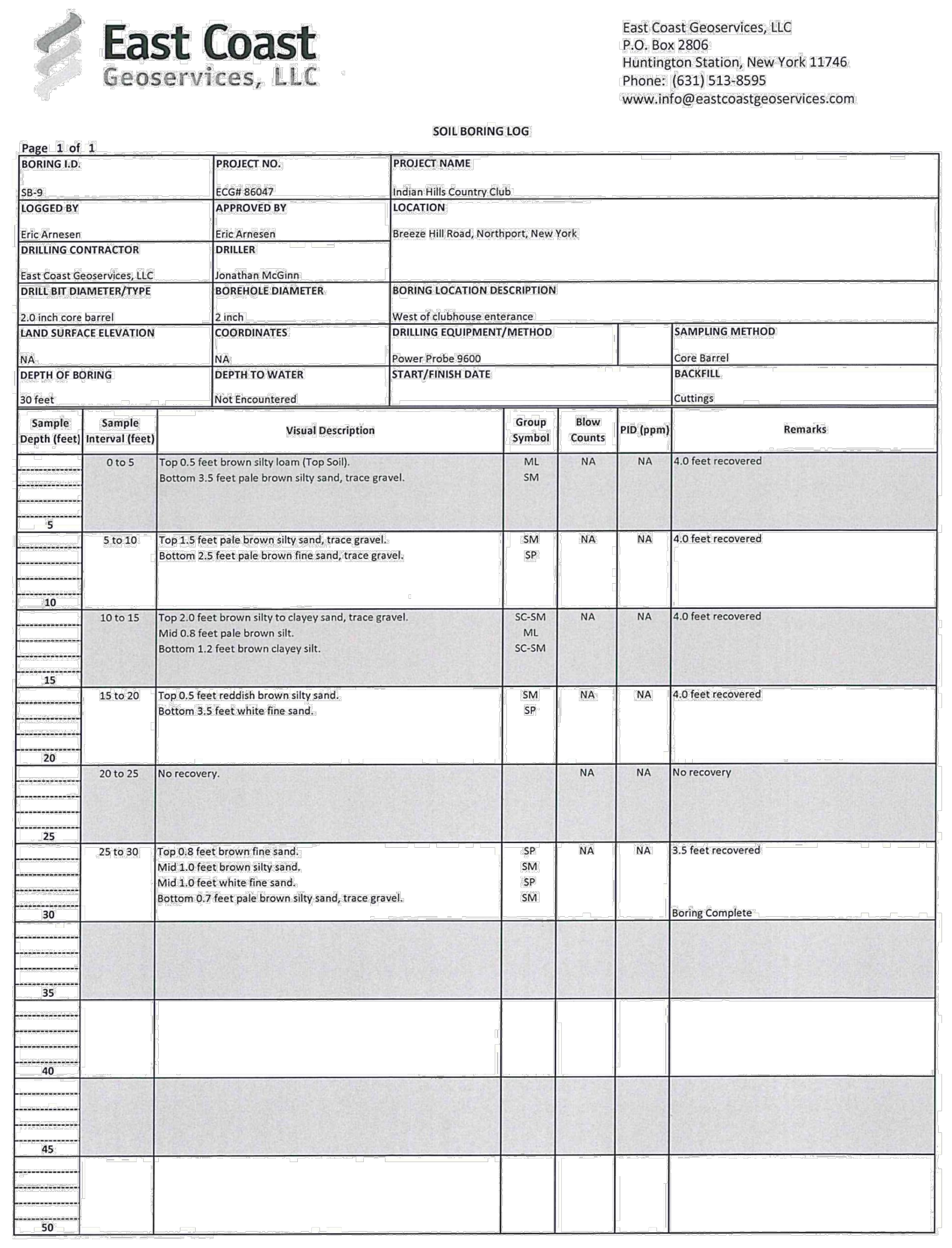

East Coast Geoservices, LLC
P.O. Box 2806
Huntington Station, New York 11746
Phone: (631) 513-8595
www.info@eastcoastgeoservices.com

SOIL BORING LOG

Page 1 of 1

BORING I.D. SB-9	PROJECT NO. ECG# 86047	PROJECT NAME Indian Hills Country Club	
LOGGED BY Eric Arnesen	APPROVED BY Eric Arnesen	LOCATION Breeze Hill Road, Northport, New York	
DRILLING CONTRACTOR East Coast Geoservices, LLC	DRILLER Jonathan McGinn		
DRILL BIT DIAMETER/TYPE 2.0 inch core barrel	BOREHOLE DIAMETER 2 inch	BORING LOCATION DESCRIPTION West of clubhouse enterance	
LAND SURFACE ELEVATION NA	COORDINATES NA	DRILLING EQUIPMENT/METHOD Power Probe 9600	SAMPLING METHOD Core Barrel
DEPTH OF BORING 30 feet	DEPTH TO WATER Not Encountered	START/FINISH DATE	BACKFILL Cuttings

Sample Depth (feet)	Sample Interval (feet)	Visual Description	Group Symbol	Blow Counts	PID (ppm)	Remarks
5	0 to 5	Top 0.5 feet brown silty loam (Top Soil). Bottom 3.5 feet pale brown silty sand, trace gravel.	ML SM	NA	NA	4.0 feet recovered
10	5 to 10	Top 1.5 feet pale brown silty sand, trace gravel. Bottom 2.5 feet pale brown fine sand, trace gravel.	SM SP	NA	NA	4.0 feet recovered
15	10 to 15	Top 2.0 feet brown silty to clayey sand, trace gravel. Mid 0.8 feet pale brown silt. Bottom 1.2 feet brown clayey silt.	SC-SM ML SC-SM	NA	NA	4.0 feet recovered
20	15 to 20	Top 0.5 feet reddish brown silty sand. Bottom 3.5 feet white fine sand.	SM SP	NA	NA	4.0 feet recovered
25	20 to 25	No recovery.		NA	NA	No recovery
30	25 to 30	Top 0.8 feet brown fine sand. Mid 1.0 feet brown silty sand. Mid 1.0 feet white fine sand. Bottom 0.7 feet pale brown silty sand, trace gravel.	SP SM SP SM	NA	NA	3.5 feet recovered Boring Complete
35						
40						
45						
50						

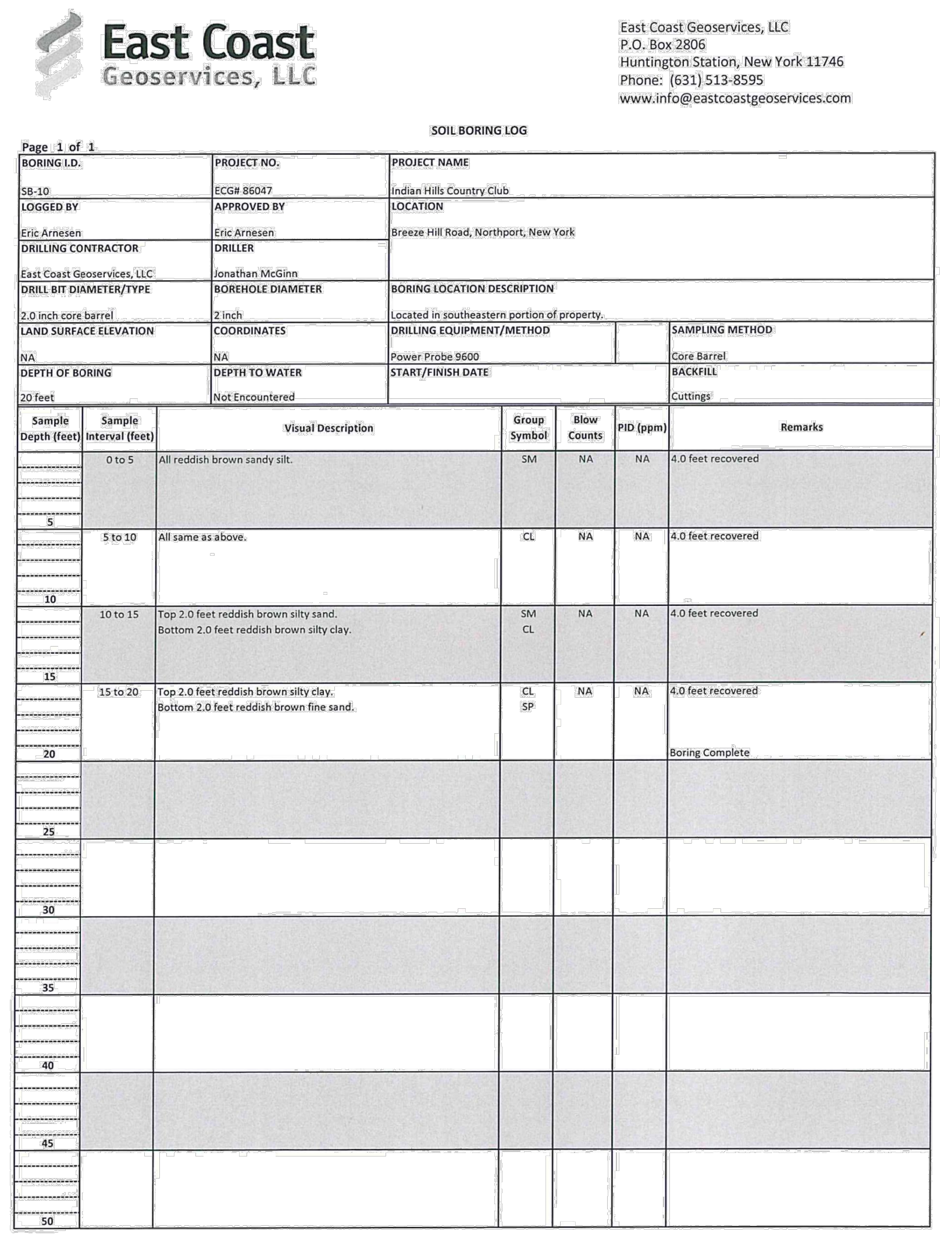

East Coast Geoservices, LLC
P.O. Box 2806
Huntington Station, New York 11746
Phone: (631) 513-8595
www.info@eastcoastgeoservices.com

SOIL BORING LOG

Page 1 of 1

BORING I.D. SB-10	PROJECT NO. ECG# 86047	PROJECT NAME Indian Hills Country Club	
LOGGED BY Eric Arnesen	APPROVED BY Eric Arnesen	LOCATION Breeze Hill Road, Northport, New York	
DRILLING CONTRACTOR East Coast Geoservices, LLC	DRILLER Jonathan McGinn		
DRILL BIT DIAMETER/TYPE 2.0 inch core barrel	BOREHOLE DIAMETER 2 inch	BORING LOCATION DESCRIPTION Located in southeastern portion of property.	
LAND SURFACE ELEVATION NA	COORDINATES NA	DRILLING EQUIPMENT/METHOD Power Probe 9600	SAMPLING METHOD Core Barrel
DEPTH OF BORING 20 feet	DEPTH TO WATER Not Encountered	START/FINISH DATE	BACKFILL Cuttings

Sample Depth (feet)	Sample Interval (feet)	Visual Description	Group Symbol	Blow Counts	PID (ppm)	Remarks
5	0 to 5	All reddish brown sandy silt.	SM	NA	NA	4.0 feet recovered
10	5 to 10	All same as above.	CL	NA	NA	4.0 feet recovered
15	10 to 15	Top 2.0 feet reddish brown silty sand. Bottom 2.0 feet reddish brown silty clay.	SM CL	NA	NA	4.0 feet recovered
20	15 to 20	Top 2.0 feet reddish brown silty clay. Bottom 2.0 feet reddish brown fine sand.	CL SP	NA	NA	4.0 feet recovered Boring Complete
25						
30						
35						
40						
45						
50						

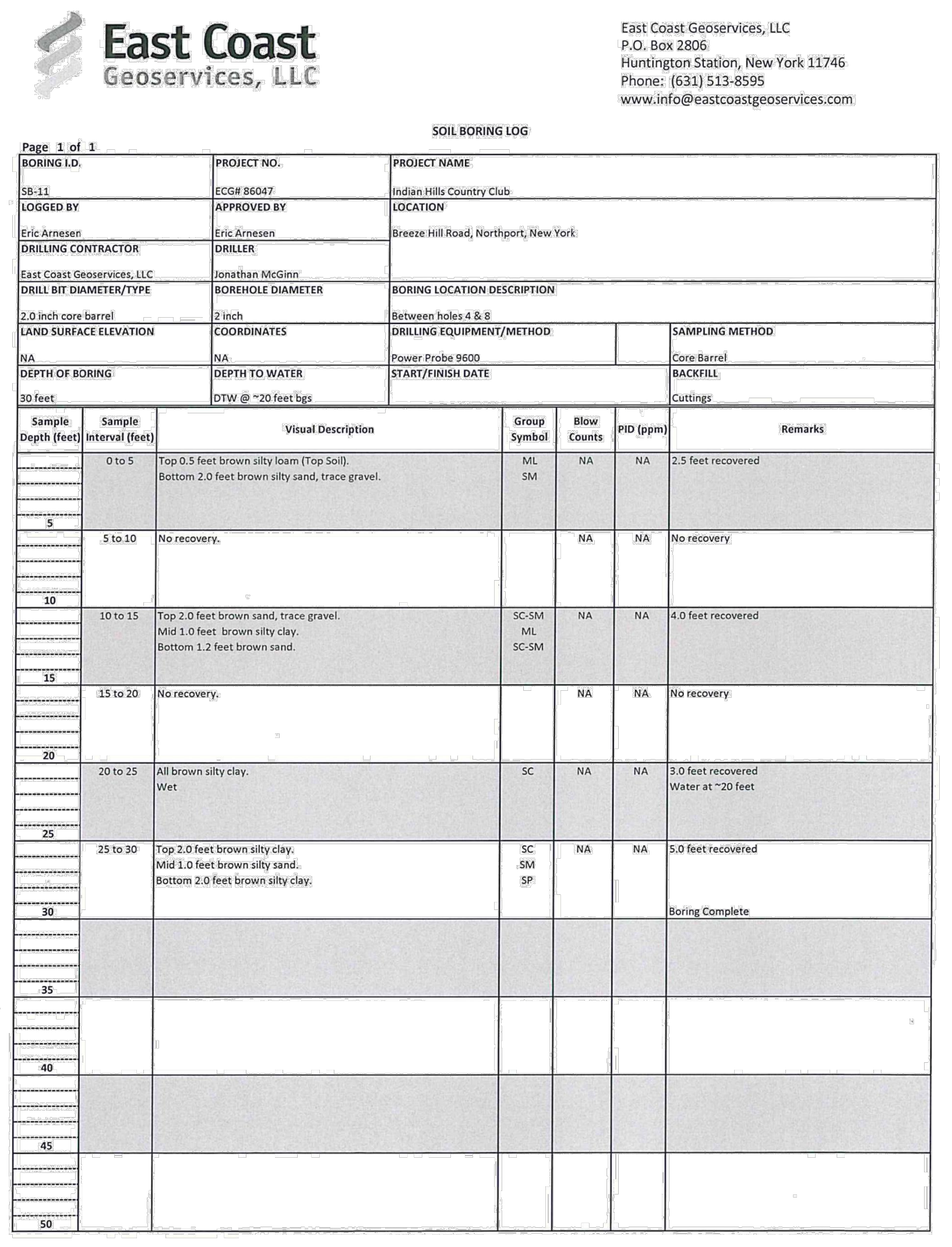

East Coast Geoservices, LLC
P.O. Box 2806
Huntington Station, New York 11746
Phone: (631) 513-8595
www.info@eastcoastgeoservices.com

SOIL BORING LOG

Page 1 of 1

BORING I.D. SB-11	PROJECT NO. ECG# 86047	PROJECT NAME Indian Hills Country Club	
LOGGED BY Eric Arnesen	APPROVED BY Eric Arnesen	LOCATION Breeze Hill Road, Northport, New York	
DRILLING CONTRACTOR East Coast Geoservices, LLC	DRILLER Jonathan McGinn		
DRILL BIT DIAMETER/TYPE 2.0 inch core barrel	BOREHOLE DIAMETER 2 inch	BORING LOCATION DESCRIPTION Between holes 4 & 8	
LAND SURFACE ELEVATION NA	COORDINATES NA	DRILLING EQUIPMENT/METHOD Power Probe 9600	SAMPLING METHOD Core Barrel
DEPTH OF BORING 30 feet	DEPTH TO WATER DTW @ ~20 feet bgs	START/FINISH DATE	BACKFILL Cuttings

Sample Depth (feet)	Sample Interval (feet)	Visual Description	Group Symbol	Blow Counts	PID (ppm)	Remarks
5	0 to 5	Top 0.5 feet brown silty loam (Top Soil). Bottom 2.0 feet brown silty sand, trace gravel.	ML SM	NA	NA	2.5 feet recovered
10	5 to 10	No recovery.		NA	NA	No recovery
15	10 to 15	Top 2.0 feet brown sand, trace gravel. Mid 1.0 feet brown silty clay. Bottom 1.2 feet brown sand.	SC-SM ML SC-SM	NA	NA	4.0 feet recovered
20	15 to 20	No recovery.		NA	NA	No recovery
25	20 to 25	All brown silty clay. Wet	SC	NA	NA	3.0 feet recovered Water at ~20 feet
30	25 to 30	Top 2.0 feet brown silty clay. Mid 1.0 feet brown silty sand. Bottom 2.0 feet brown silty clay.	SC SM SP	NA	NA	5.0 feet recovered Boring Complete
35						
40						
45						
50						

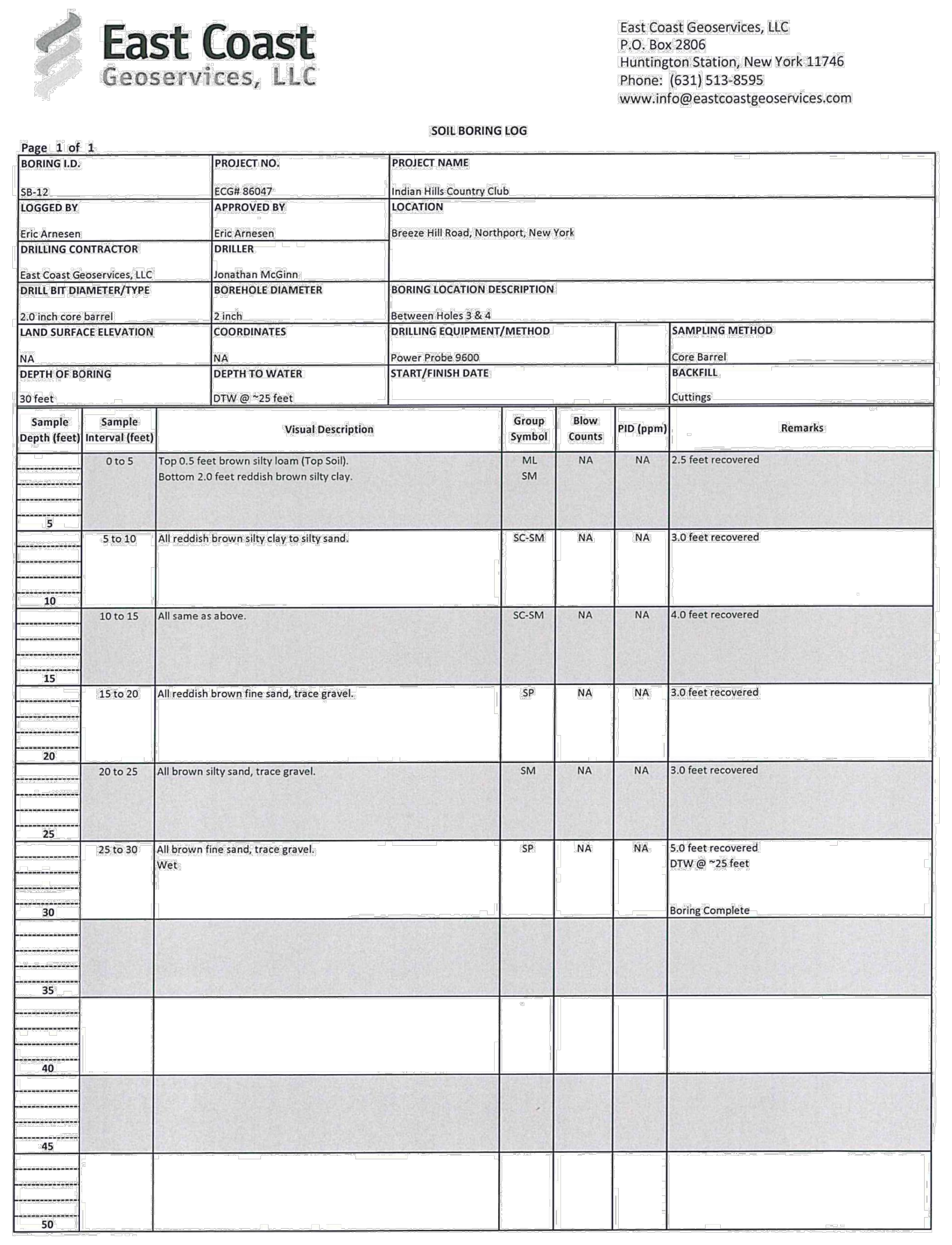

East Coast Geoservices, LLC
P.O. Box 2806
Huntington Station, New York 11746
Phone: (631) 513-8595
www.info@eastcoastgeoservices.com

SOIL BORING LOG

Page 1 of 1

BORING I.D. SB-12	PROJECT NO. ECG# 86047	PROJECT NAME Indian Hills Country Club	
LOGGED BY Eric Arnesen	APPROVED BY Eric Arnesen	LOCATION Breeze Hill Road, Northport, New York	
DRILLING CONTRACTOR East Coast Geoservices, LLC	DRILLER Jonathan McGinn		
DRILL BIT DIAMETER/TYPE 2.0 inch core barrel	BOREHOLE DIAMETER 2 inch	BORING LOCATION DESCRIPTION Between Holes 3 & 4	
LAND SURFACE ELEVATION NA	COORDINATES NA	DRILLING EQUIPMENT/METHOD Power Probe 9600	SAMPLING METHOD Core Barrel
DEPTH OF BORING 30 feet	DEPTH TO WATER DTW @ ~25 feet	START/FINISH DATE	BACKFILL Cuttings

Sample Depth (feet)	Sample Interval (feet)	Visual Description	Group Symbol	Blow Counts	PID (ppm)	Remarks
5	0 to 5	Top 0.5 feet brown silty loam (Top Soil). Bottom 2.0 feet reddish brown silty clay.	ML SM	NA	NA	2.5 feet recovered
10	5 to 10	All reddish brown silty clay to silty sand.	SC-SM	NA	NA	3.0 feet recovered
15	10 to 15	All same as above.	SC-SM	NA	NA	4.0 feet recovered
20	15 to 20	All reddish brown fine sand, trace gravel.	SP	NA	NA	3.0 feet recovered
25	20 to 25	All brown silty sand, trace gravel.	SM	NA	NA	3.0 feet recovered
30	25 to 30	All brown fine sand, trace gravel. Wet	SP	NA	NA	5.0 feet recovered DTW @ ~25 feet Boring Complete
35						
40						
45						
50						

FOR TOWN USE

No.	REVISION	DATE

OWNER
I.H.C.C., INC. AND
ROBERG REVOCABLE TRUST
21 BREEZE HILL ROAD
NORTHPORT, NY, 11768
(631) 261 - 5700

APPLICANT:
THE PRESERVE AT INDIAN HILLS
1 RABRO DRIVE, SUITE 100
HAUPPAUGE, N.Y. 11788
(631) 351 - 4000

TEST BORING LOGS - 1

FOR

THE PRESERVE AT INDIAN HILLS

SITUATED AT

NORTHPORT

TOWN OF HUNTINGTON, SUFFOLK COUNTY, NEW YORK
S.C.T.M.: DISTRICT: 0400, SECT. 014, BLK. 04, LOTS 1 AND 2
DISTRICT 0400, SECT. 015, BLK. 01, LOTS 3.1, 3.2, 11, 12, 16, 19 AND P/O 22

CHARLES DIXON

NELSON + POPE
engineers • architects • surveyors
70 Maxess Road, Melville, NY 11747 • 631.427.5665 • nelsonpope.com

DRAWN BY: GEO	CADD No.: 86047 CSP TB_LOGS 2021.DWG	SCALE: NONE	DRAWING NO.: TB - 103
CHECKED BY: JM	FILE NO.: 400-014		
DATE: OCTOBER, 2021	PROJECT NO.: 86047		SHEET NO.: 42 OF 44

G:\projects\86047\FINALS\CONDOMINIUM\86047 CSP TB_LOGS 2021.dwg, 42 OF 44 TEST BORING LOGS - 1, 10/11/2021 3:06:45 PM

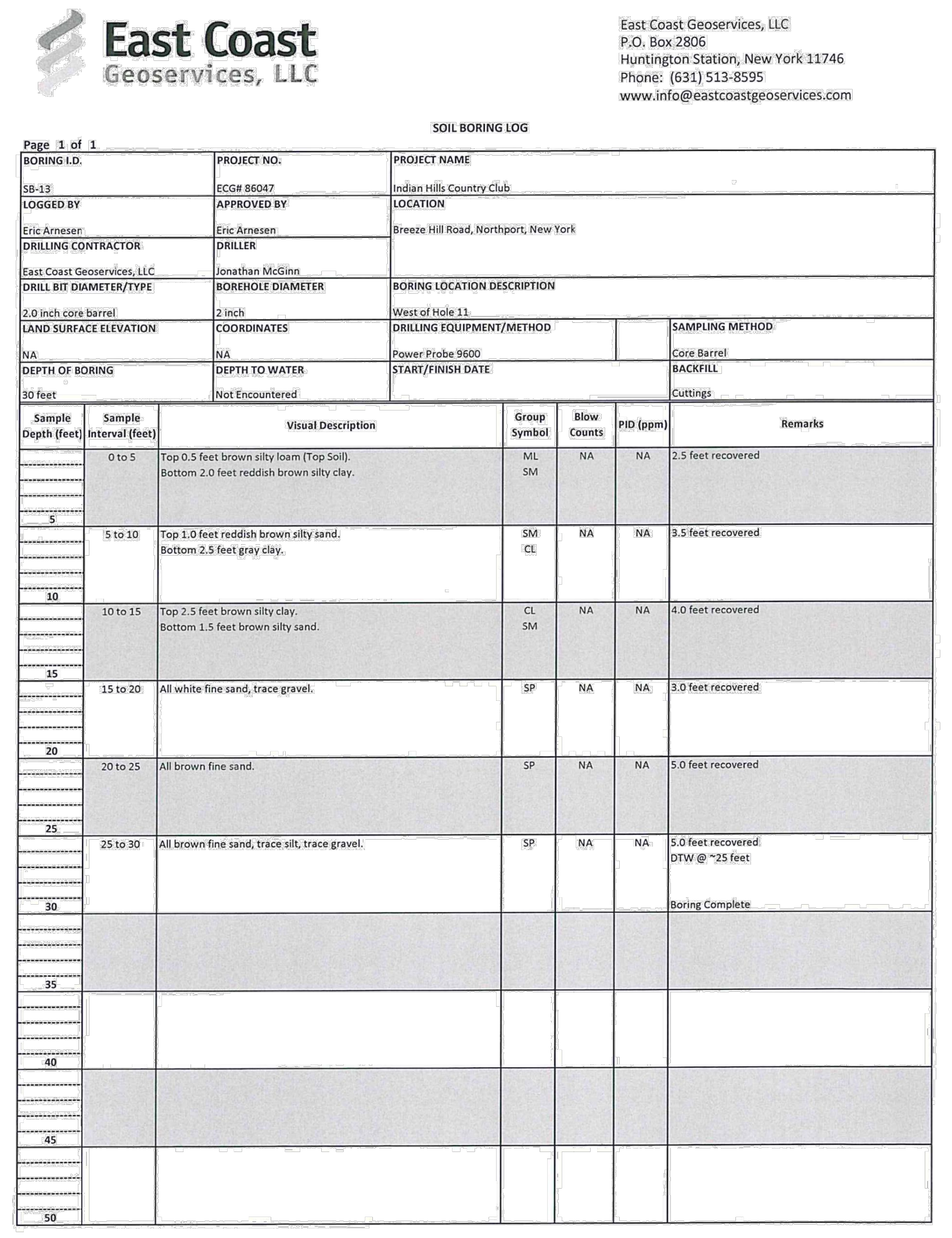

East Coast Geoservices, LLC
P.O. Box 2806
Huntington Station, New York 11746
Phone: (631) 513-8595
www.info@eastcoastgeoservices.com

SOIL BORING LOG

Page 1 of 1

BORING I.D.: SB-13
PROJECT NO.: ECG# 86047
PROJECT NAME: Indian Hills Country Club
LOGGED BY: Eric Arnesen
APPROVED BY: Eric Arnesen
LOCATION: Breeze Hill Road, Northport, New York
DRILLING CONTRACTOR: East Coast Geoservices, LLC
DRILLER: Jonathan McGinn
DRILL BIT DIAMETER/TYPE: 2.0 inch core barrel
BOREHOLE DIAMETER: 2 inch
BORING LOCATION DESCRIPTION: West of Hole 11
LAND SURFACE ELEVATION: NA
COORDINATES: NA
DRILLING EQUIPMENT/METHOD: Power Probe 9600
SAMPLING METHOD: Core Barrel
DEPTH OF BORING: 30 feet
DEPTH TO WATER: Not Encountered
START/FINISH DATE:
BACKFILL: Cuttings

Sample Depth (feet)	Sample Interval (feet)	Visual Description	Group Symbol	Blow Counts	PID (ppm)	Remarks
5	0 to 5	Top 0.5 feet brown silty loam (Top Soil). Bottom 2.0 feet reddish brown silty clay.	ML SM	NA	NA	2.5 feet recovered
10	5 to 10	Top 1.0 feet reddish brown silty sand. Bottom 2.5 feet gray clay.	SM CL	NA	NA	3.5 feet recovered
15	10 to 15	Top 2.5 feet brown silty clay. Bottom 1.5 feet brown silty sand.	CL SM	NA	NA	4.0 feet recovered
20	15 to 20	All white fine sand, trace gravel.	SP	NA	NA	3.0 feet recovered
25	20 to 25	All brown fine sand.	SP	NA	NA	5.0 feet recovered
30	25 to 30	All brown fine sand, trace silt, trace gravel.	SP	NA	NA	5.0 feet recovered DTW @ ~25 feet Boring Complete
35						
40						
45						
50						

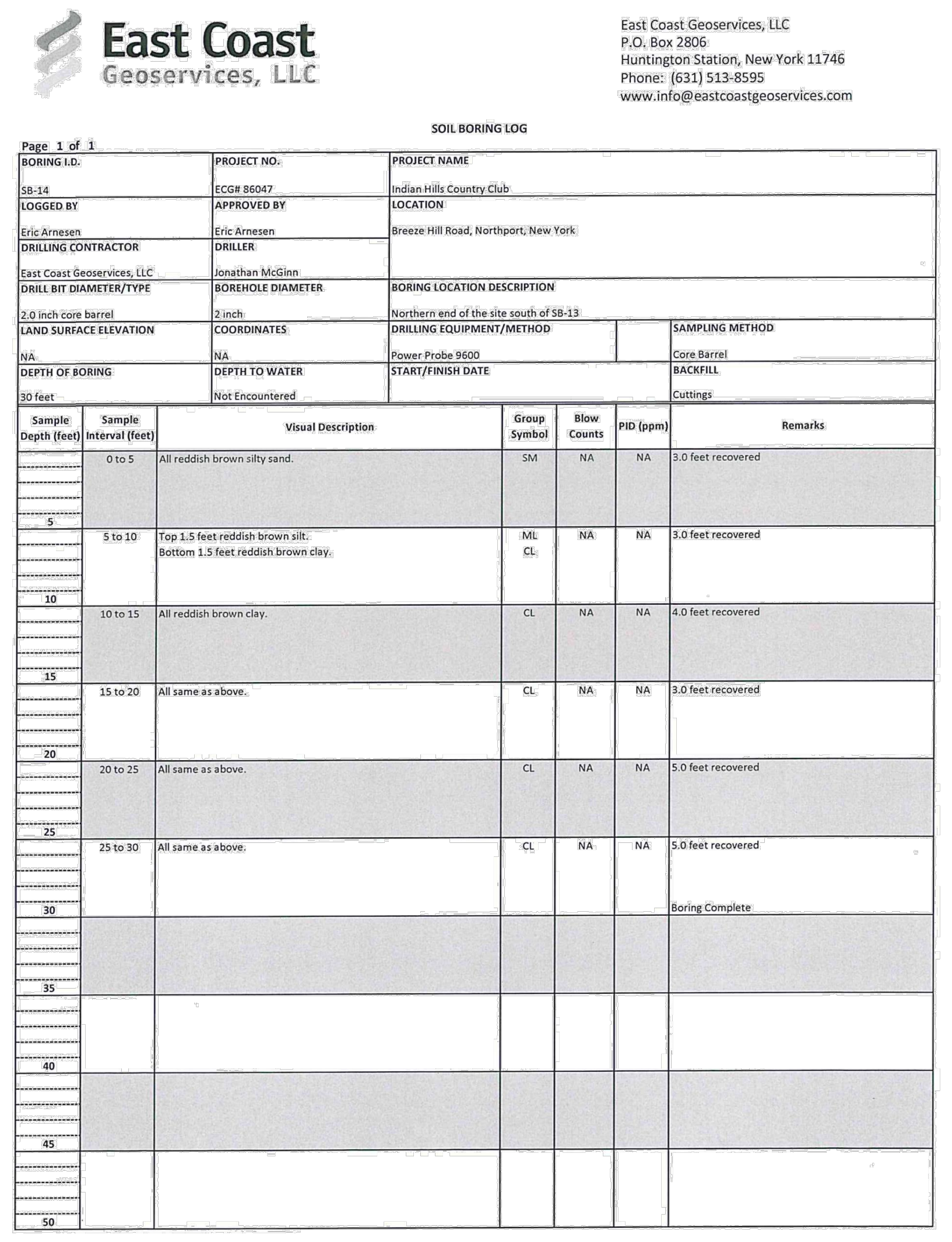

East Coast Geoservices, LLC
P.O. Box 2806
Huntington Station, New York 11746
Phone: (631) 513-8595
www.info@eastcoastgeoservices.com

SOIL BORING LOG

Page 1 of 1

BORING I.D.: SB-14
PROJECT NO.: ECG# 86047
PROJECT NAME: Indian Hills Country Club
LOGGED BY: Eric Arnesen
APPROVED BY: Eric Arnesen
LOCATION: Breeze Hill Road, Northport, New York
DRILLING CONTRACTOR: East Coast Geoservices, LLC
DRILLER: Jonathan McGinn
DRILL BIT DIAMETER/TYPE: 2.0 inch core barrel
BOREHOLE DIAMETER: 2 inch
BORING LOCATION DESCRIPTION: Northern end of the site south of SB-13
LAND SURFACE ELEVATION: NA
COORDINATES: NA
DRILLING EQUIPMENT/METHOD: Power Probe 9600
SAMPLING METHOD: Core Barrel
DEPTH OF BORING: 30 feet
DEPTH TO WATER: Not Encountered
START/FINISH DATE:
BACKFILL: Cuttings

Sample Depth (feet)	Sample Interval (feet)	Visual Description	Group Symbol	Blow Counts	PID (ppm)	Remarks
5	0 to 5	All reddish brown silty sand.	SM	NA	NA	3.0 feet recovered
10	5 to 10	Top 1.5 feet reddish brown silt. Bottom 1.5 feet reddish brown clay.	ML CL	NA	NA	3.0 feet recovered
15	10 to 15	All reddish brown clay.	CL	NA	NA	4.0 feet recovered
20	15 to 20	All same as above.	CL	NA	NA	3.0 feet recovered
25	20 to 25	All same as above.	CL	NA	NA	5.0 feet recovered
30	25 to 30	All same as above.	CL	NA	NA	5.0 feet recovered Boring Complete
35						
40						
45						
50						

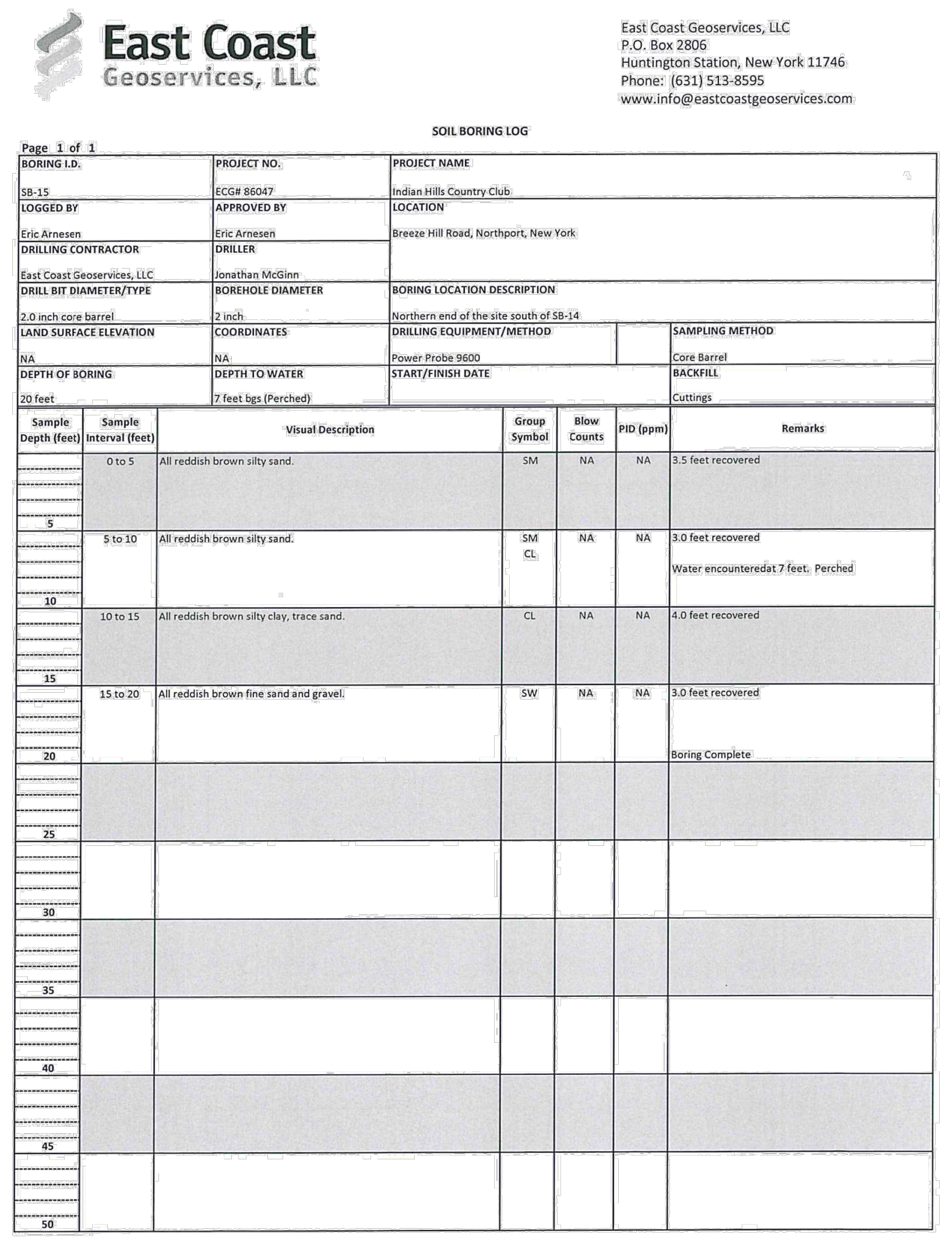

East Coast Geoservices, LLC
P.O. Box 2806
Huntington Station, New York 11746
Phone: (631) 513-8595
www.info@eastcoastgeoservices.com

SOIL BORING LOG

Page 1 of 1

BORING I.D.: SB-15
PROJECT NO.: ECG# 86047
PROJECT NAME: Indian Hills Country Club
LOGGED BY: Eric Arnesen
APPROVED BY: Eric Arnesen
LOCATION: Breeze Hill Road, Northport, New York
DRILLING CONTRACTOR: East Coast Geoservices, LLC
DRILLER: Jonathan McGinn
DRILL BIT DIAMETER/TYPE: 2.0 inch core barrel
BOREHOLE DIAMETER: 2 inch
BORING LOCATION DESCRIPTION: Northern end of the site south of SB-14
LAND SURFACE ELEVATION: NA
COORDINATES: NA
DRILLING EQUIPMENT/METHOD: Power Probe 9600
SAMPLING METHOD: Core Barrel
DEPTH OF BORING: 20 feet
DEPTH TO WATER: 7 feet bgs (Perched)
START/FINISH DATE:
BACKFILL: Cuttings

Sample Depth (feet)	Sample Interval (feet)	Visual Description	Group Symbol	Blow Counts	PID (ppm)	Remarks
5	0 to 5	All reddish brown silty sand.	SM	NA	NA	3.5 feet recovered
10	5 to 10	All reddish brown silty sand.	SM CL	NA	NA	3.0 feet recovered Water encounteredat 7 feet. Perched
15	10 to 15	All reddish brown silty clay, trace sand.	CL	NA	NA	4.0 feet recovered
20	15 to 20	All reddish brown fine sand and gravel.	SW	NA	NA	3.0 feet recovered Boring Complete
25						
30						
35						
40						
45						
50						

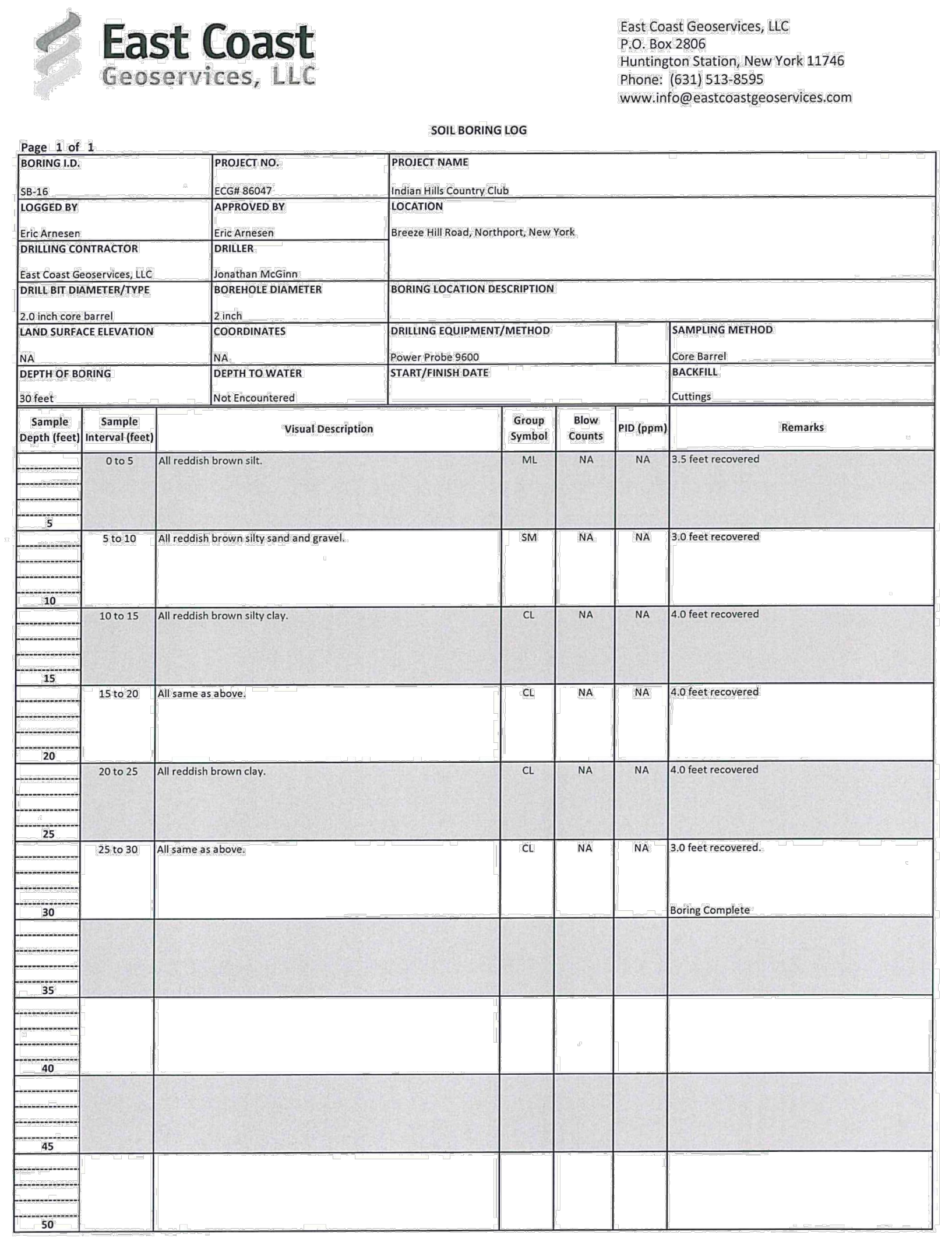

East Coast Geoservices, LLC
P.O. Box 2806
Huntington Station, New York 11746
Phone: (631) 513-8595
www.info@eastcoastgeoservices.com

SOIL BORING LOG

Page 1 of 1

BORING I.D.: SB-16
PROJECT NO.: ECG# 86047
PROJECT NAME: Indian Hills Country Club
LOGGED BY: Eric Arnesen
APPROVED BY: Eric Arnesen
LOCATION: Breeze Hill Road, Northport, New York
DRILLING CONTRACTOR: East Coast Geoservices, LLC
DRILLER: Jonathan McGinn
DRILL BIT DIAMETER/TYPE: 2.0 inch core barrel
BOREHOLE DIAMETER: 2 inch
BORING LOCATION DESCRIPTION:
LAND SURFACE ELEVATION: NA
COORDINATES: NA
DRILLING EQUIPMENT/METHOD: Power Probe 9600
SAMPLING METHOD: Core Barrel
DEPTH OF BORING: 30 feet
DEPTH TO WATER: Not Encountered
START/FINISH DATE:
BACKFILL: Cuttings

Sample Depth (feet)	Sample Interval (feet)	Visual Description	Group Symbol	Blow Counts	PID (ppm)	Remarks
5	0 to 5	All reddish brown silt.	ML	NA	NA	3.5 feet recovered
10	5 to 10	All reddish brown silty sand and gravel.	SM	NA	NA	3.0 feet recovered
15	10 to 15	All reddish brown silty clay.	CL	NA	NA	4.0 feet recovered
20	15 to 20	All same as above.	CL	NA	NA	4.0 feet recovered
25	20 to 25	All reddish brown clay.	CL	NA	NA	4.0 feet recovered
30	25 to 30	All same as above.	CL	NA	NA	3.0 feet recovered. Boring Complete
35						
40						
45						
50						

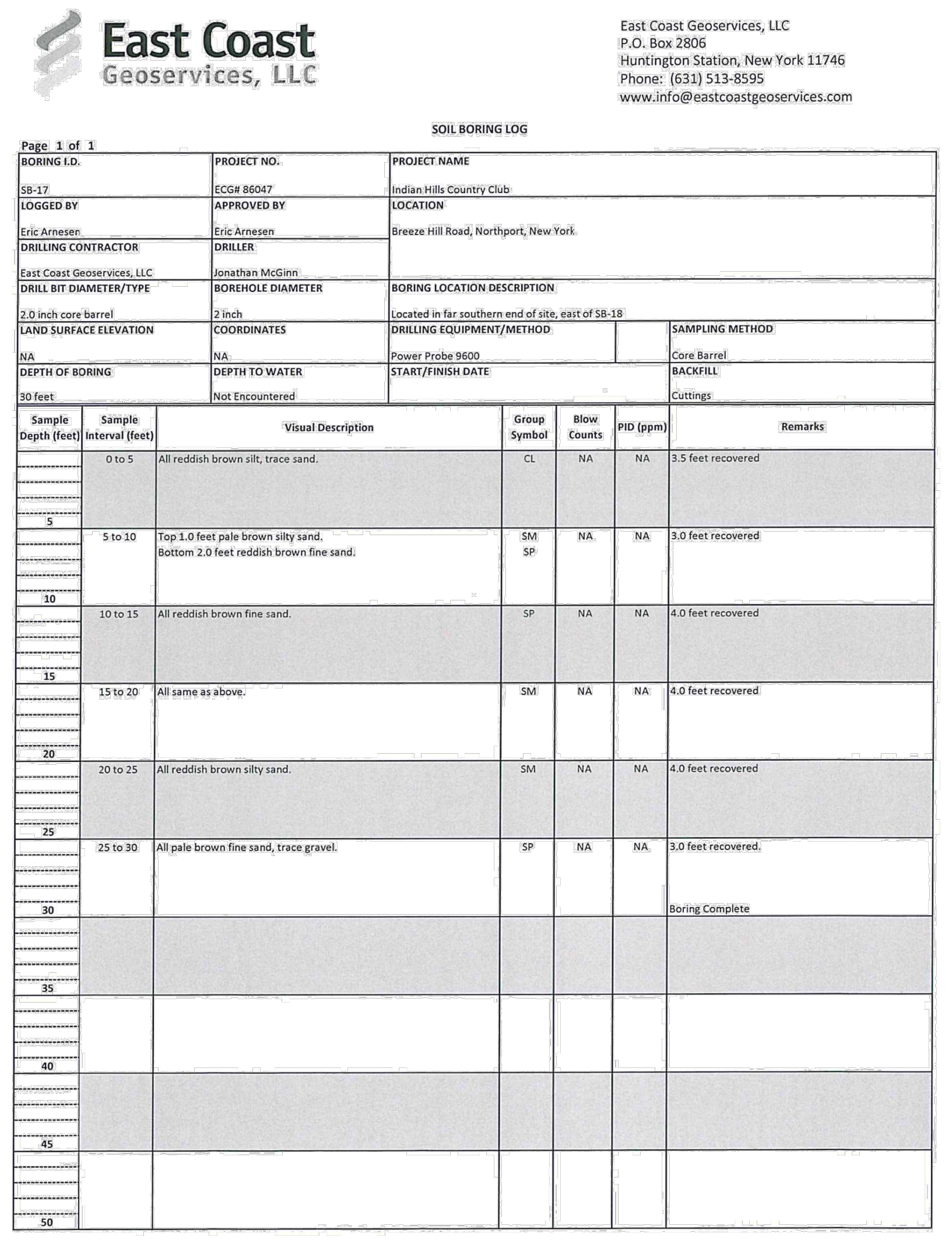

East Coast Geoservices, LLC
P.O. Box 2806
Huntington Station, New York 11746
Phone: (631) 513-8595
www.info@eastcoastgeoservices.com

SOIL BORING LOG

Page 1 of 1

BORING I.D.: SB-17
PROJECT NO.: ECG# 86047
PROJECT NAME: Indian Hills Country Club
LOGGED BY: Eric Arnesen
APPROVED BY: Eric Arnesen
LOCATION: Breeze Hill Road, Northport, New York
DRILLING CONTRACTOR: East Coast Geoservices, LLC
DRILLER: Jonathan McGinn
DRILL BIT DIAMETER/TYPE: 2.0 inch core barrel
BOREHOLE DIAMETER: 2 inch
BORING LOCATION DESCRIPTION: Located in far southern end of site, east of SB-18
LAND SURFACE ELEVATION: NA
COORDINATES: NA
DRILLING EQUIPMENT/METHOD: Power Probe 9600
SAMPLING METHOD: Core Barrel
DEPTH OF BORING: 30 feet
DEPTH TO WATER: Not Encountered
START/FINISH DATE:
BACKFILL: Cuttings

Sample Depth (feet)	Sample Interval (feet)	Visual Description	Group Symbol	Blow Counts	PID (ppm)	Remarks
5	0 to 5	All reddish brown silt, trace sand.	CL	NA	NA	3.5 feet recovered
10	5 to 10	Top 1.0 feet pale brown silty sand. Bottom 2.0 feet reddish brown fine sand.	SM SP	NA	NA	3.0 feet recovered
15	10 to 15	All reddish brown fine sand.	SP	NA	NA	4.0 feet recovered
20	15 to 20	All same as above.	SM	NA	NA	4.0 feet recovered
25	20 to 25	All reddish brown silty sand.	SM	NA	NA	4.0 feet recovered
30	25 to 30	All pale brown fine sand, trace gravel.	SP	NA	NA	3.0 feet recovered. Boring Complete
35						
40						
45						
50						

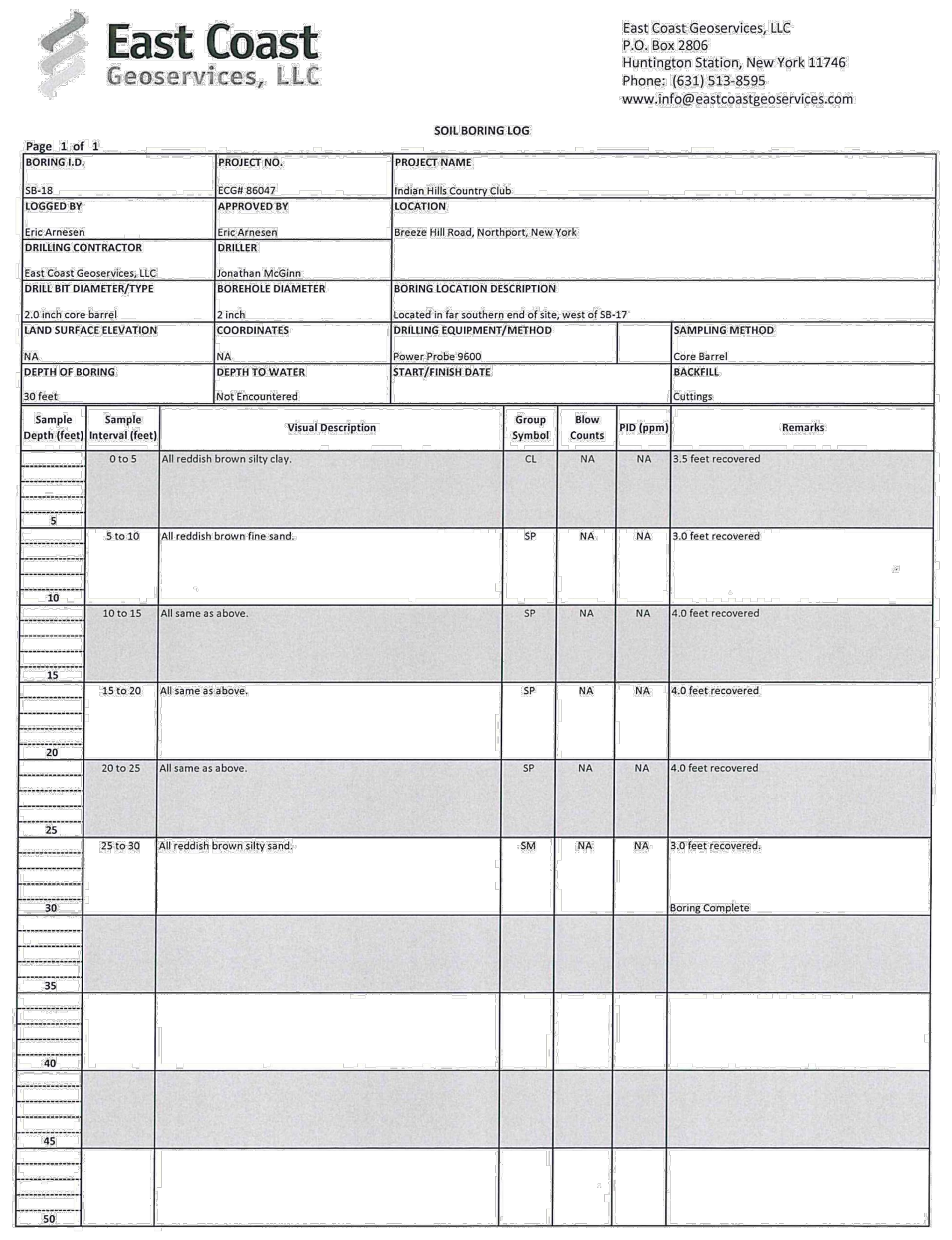

East Coast Geoservices, LLC
P.O. Box 2806
Huntington Station, New York 11746
Phone: (631) 513-8595
www.info@eastcoastgeoservices.com

SOIL BORING LOG

Page 1 of 1

BORING I.D.: SB-18
PROJECT NO.: ECG# 86047
PROJECT NAME: Indian Hills Country Club
LOGGED BY: Eric Arnesen
APPROVED BY: Eric Arnesen
LOCATION: Breeze Hill Road, Northport, New York
DRILLING CONTRACTOR: East Coast Geoservices, LLC
DRILLER: Jonathan McGinn
DRILL BIT DIAMETER/TYPE: 2.0 inch core barrel
BOREHOLE DIAMETER: 2 inch
BORING LOCATION DESCRIPTION: Located in far southern end of site, west of SB-17
LAND SURFACE ELEVATION: NA
COORDINATES: NA
DRILLING EQUIPMENT/METHOD: Power Probe 9600
SAMPLING METHOD: Core Barrel
DEPTH OF BORING: 30 feet
DEPTH TO WATER: Not Encountered
START/FINISH DATE:
BACKFILL: Cuttings

Sample Depth (feet)	Sample Interval (feet)	Visual Description	Group Symbol	Blow Counts	PID (ppm)	Remarks
5	0 to 5	All reddish brown silty clay.	CL	NA	NA	3.5 feet recovered
10	5 to 10	All reddish brown fine sand.	SP	NA	NA	3.0 feet recovered
15	10 to 15	All same as above.	SP	NA	NA	4.0 feet recovered
20	15 to 20	All same as above.	SP	NA	NA	4.0 feet recovered
25	20 to 25	All same as above.	SP	NA	NA	4.0 feet recovered
30	25 to 30	All reddish brown silty sand.	SM	NA	NA	3.0 feet recovered. Boring Complete
35						
40						
45						
50						

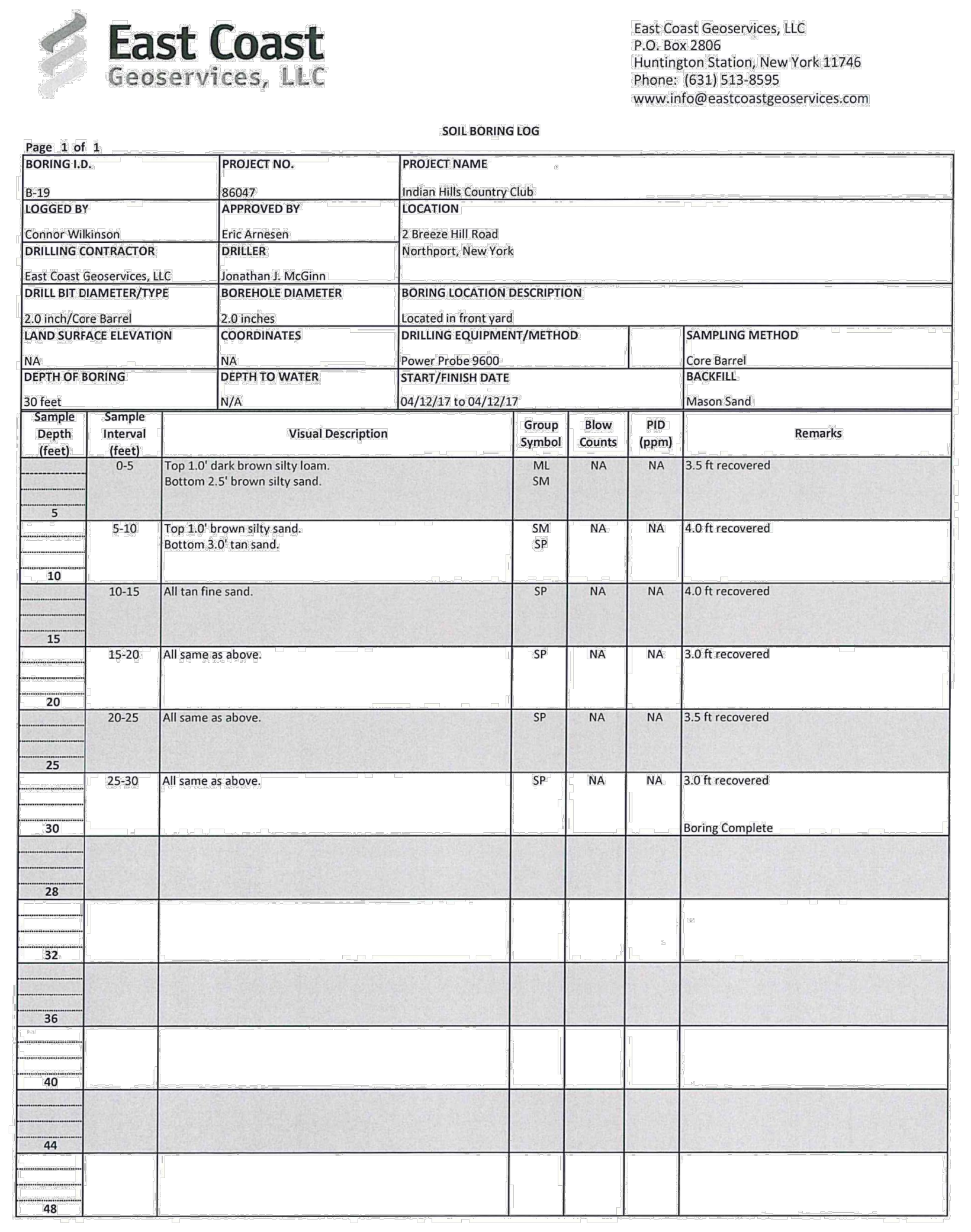

East Coast Geoservices, LLC
P.O. Box 2806
Huntington Station, New York 11746
Phone: (631) 513-8595
www.info@eastcoastgeoservices.com

SOIL BORING LOG

Page 1 of 1

BORING I.D.: B-19
PROJECT NO.: 86047
PROJECT NAME: Indian Hills Country Club
LOGGED BY: Connor Wilkinson
APPROVED BY: Eric Arnesen
LOCATION: 2 Breeze Hill Road
Northport, New York
DRILLING CONTRACTOR: East Coast Geoservices, LLC
DRILLER: Jonathan J. McGinn
DRILL BIT DIAMETER/TYPE: 2.0 inch/Core Barrel
BOREHOLE DIAMETER: 2.0 inches
BORING LOCATION DESCRIPTION: Located in front yard
LAND SURFACE ELEVATION: NA
COORDINATES: NA
DRILLING EQUIPMENT/METHOD: Power Probe 9600
SAMPLING METHOD: Core Barrel
DEPTH OF BORING: 30 feet
DEPTH TO WATER: N/A
START/FINISH DATE: 04/12/17 to 04/12/17
BACKFILL: Mason Sand

Sample Depth (feet)	Sample Interval (feet)	Visual Description	Group Symbol	Blow Counts	PID (ppm)	Remarks
5	0-5	Top 1.0' dark brown silty loam. Bottom 2.5' brown silty sand.	ML SM	NA	NA	3.5 ft recovered
10	5-10	Top 1.0' brown silty sand. Bottom 3.0' tan sand.	SM SP	NA	NA	4.0 ft recovered
15	10-15	All tan fine sand.	SP	NA	NA	4.0 ft recovered
20	15-20	All same as above.	SP	NA	NA	3.0 ft recovered
25	20-25	All same as above.	SP	NA	NA	3.5 ft recovered
30	25-30	All same as above.	SP	NA	NA	3.0 ft recovered Boring Complete
28						
32						
36						
40						
44						
48						

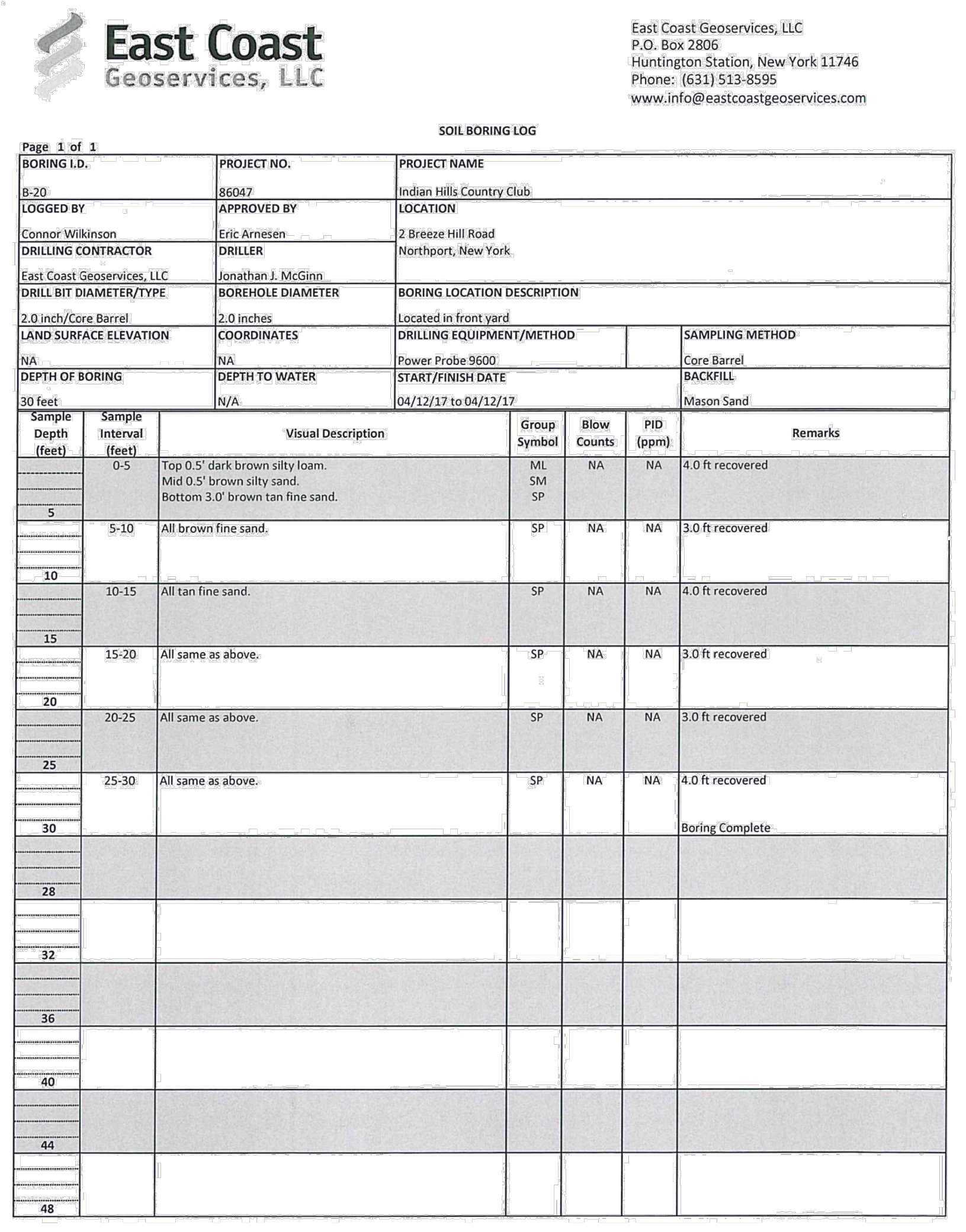

East Coast Geoservices, LLC
P.O. Box 2806
Huntington Station, New York 11746
Phone: (631) 513-8595
www.info@eastcoastgeoservices.com

SOIL BORING LOG

Page 1 of 1

BORING I.D.: B-20
PROJECT NO.: 86047
PROJECT NAME: Indian Hills Country Club
LOGGED BY: Connor Wilkinson
APPROVED BY: Eric Arnesen
LOCATION: 2 Breeze Hill Road
Northport, New York
DRILLING CONTRACTOR: East Coast Geoservices, LLC
DRILLER: Jonathan J. McGinn
DRILL BIT DIAMETER/TYPE: 2.0 inch/Core Barrel
BOREHOLE DIAMETER: 2.0 inches
BORING LOCATION DESCRIPTION: Located in front yard
LAND SURFACE ELEVATION: NA
COORDINATES: NA
DRILLING EQUIPMENT/METHOD: Power Probe 9600
SAMPLING METHOD: Core Barrel
DEPTH OF BORING: 30 feet
DEPTH TO WATER: N/A
START/FINISH DATE: 04/12/17 to 04/12/17
BACKFILL: Mason Sand

Sample Depth (feet)	Sample Interval (feet)	Visual Description	Group Symbol	Blow Counts	PID (ppm)	Remarks
5	0-5	Top 0.5' dark brown silty loam. Mid 0.5' brown silty sand. Bottom 3.0' brown tan fine sand.	ML SM SP	NA	NA	4.0 ft recovered
10	5-10	All brown fine sand.	SP	NA	NA	3.0 ft recovered
15	10-15	All tan fine sand.	SP	NA	NA	4.0 ft recovered
20	15-20	All same as above.	SP	NA	NA	3.0 ft recovered
25	20-25	All same as above.	SP	NA	NA	3.0 ft recovered
30	25-30	All same as above.	SP	NA	NA	4.0 ft recovered Boring Complete
28						
32						
36						
40						
44						
48						

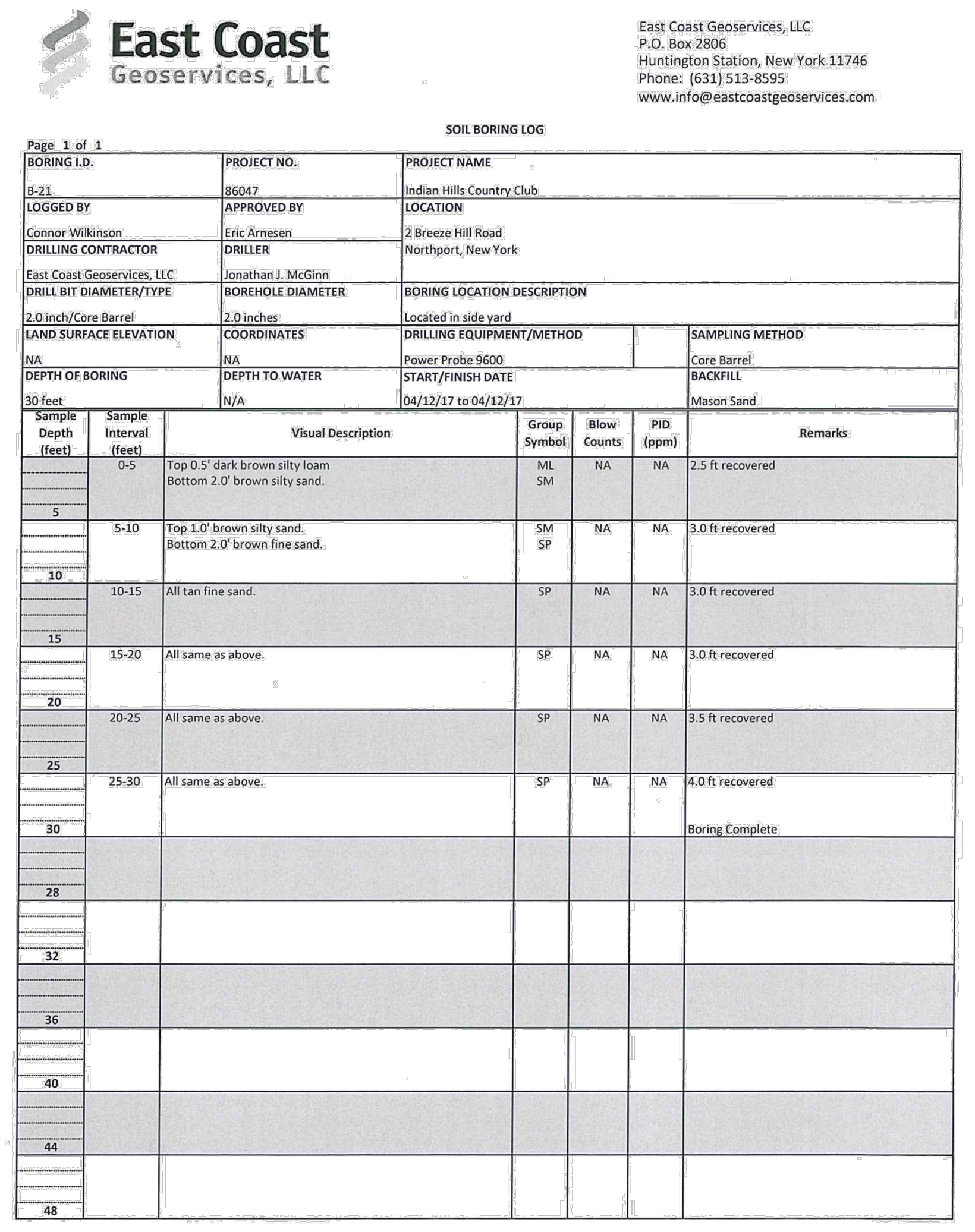

East Coast Geoservices, LLC
P.O. Box 2806
Huntington Station, New York 11746
Phone: (631) 513-8595
www.info@eastcoastgeoservices.com

SOIL BORING LOG

Page 1 of 1

BORING I.D.: B-21
PROJECT NO.: 86047
PROJECT NAME: Indian Hills Country Club
LOGGED BY: Connor Wilkinson
APPROVED BY: Eric Arnesen
LOCATION: 2 Breeze Hill Road
Northport, New York
DRILLING CONTRACTOR: East Coast Geoservices, LLC
DRILLER: Jonathan J. McGinn
DRILL BIT DIAMETER/TYPE: 2.0 inch/Core Barrel
BOREHOLE DIAMETER: 2.0 inches
BORING LOCATION DESCRIPTION: Located in side yard
LAND SURFACE ELEVATION: NA
COORDINATES: NA
DRILLING EQUIPMENT/METHOD: Power Probe 9600
SAMPLING METHOD: Core Barrel
DEPTH OF BORING: 30 feet
DEPTH TO WATER: N/A
START/FINISH DATE: 04/12/17 to 04/12/17
BACKFILL: Mason Sand

Sample Depth (feet)	Sample Interval (feet)	Visual Description	Group Symbol	Blow Counts	PID (ppm)	Remarks
5	0-5	Top 0.5' dark brown silty loam Bottom 2.0' brown silty sand.	ML SM	NA	NA	2.5 ft recovered
10	5-10	Top 1.0' brown silty sand. Bottom 2.0' brown fine sand.	SM SP	NA	NA	3.0 ft recovered
15	10-15	All tan fine sand.	SP	NA	NA	3.0 ft recovered
20	15-20	All same as above.	SP	NA	NA	3.0 ft recovered
25	20-25	All same as above.	SP	NA	NA	3.5 ft recovered
30	25-30	All same as above.	SP	NA	NA	4.0 ft recovered Boring Complete
28						
32						
36						
40						
44						
48						

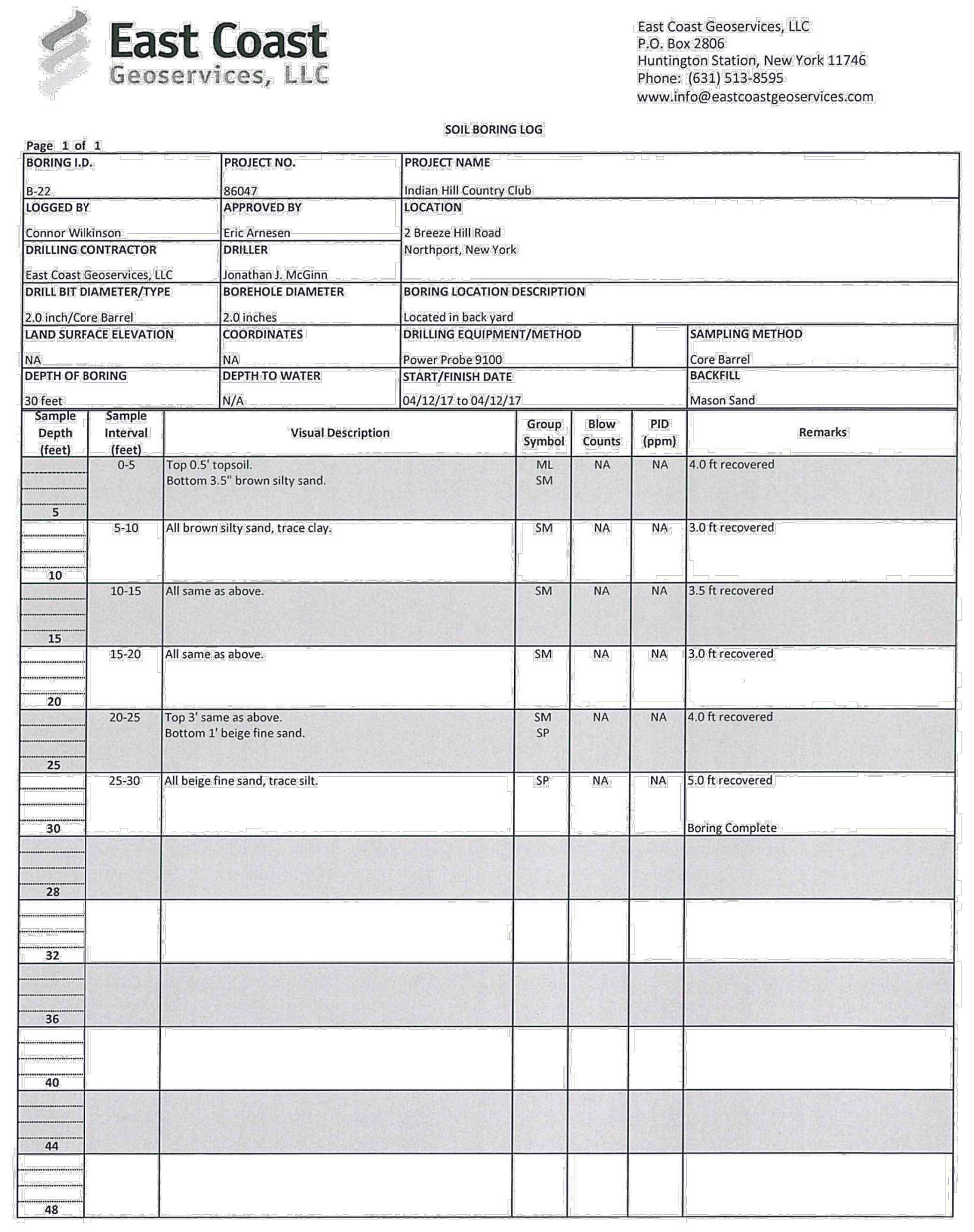

East Coast Geoservices, LLC
P.O. Box 2806
Huntington Station, New York 11746
Phone: (631) 513-8595
www.info@eastcoastgeoservices.com

SOIL BORING LOG

Page 1 of 1

BORING I.D.: B-22
PROJECT NO.: 86047
PROJECT NAME: Indian Hill Country Club
LOGGED BY: Connor Wilkinson
APPROVED BY: Eric Arnesen
LOCATION: 2 Breeze Hill Road
Northport, New York
DRILLING CONTRACTOR: East Coast Geoservices, LLC
DRILLER: Jonathan J. McGinn
DRILL BIT DIAMETER/TYPE: 2.0 inch/Core Barrel
BOREHOLE DIAMETER: 2.0 inches
BORING LOCATION DESCRIPTION: Located in back yard
LAND SURFACE ELEVATION: NA
COORDINATES: NA
DRILLING EQUIPMENT/METHOD: Power Probe 9100
SAMPLING METHOD: Core Barrel
DEPTH OF BORING: 30 feet
DEPTH TO WATER: N/A
START/FINISH DATE: 04/12/17 to 04/12/17
BACKFILL: Mason Sand

Sample Depth (feet)	Sample Interval (feet)	Visual Description	Group Symbol	Blow Counts	PID (ppm)	Remarks
5	0-5	Top 0.5' topsoil. Bottom 3.5" brown silty sand.	ML SM	NA	NA	4.0 ft recovered
10	5-10	All brown silty sand, trace clay.	SM	NA	NA	3.0 ft recovered
15	10-15	All same as above.	SM	NA	NA	3.5 ft recovered
20	15-20	All same as above.	SM	NA	NA	3.0 ft recovered
25	20-25	Top 3' same as above. Bottom 1' beige fine sand.	SM SP	NA	NA	4.0 ft recovered
30	25-30	All beige fine sand, trace silt.	SP	NA	NA	5.0 ft recovered Boring Complete
28						
32						
36						
40						
44						
48						

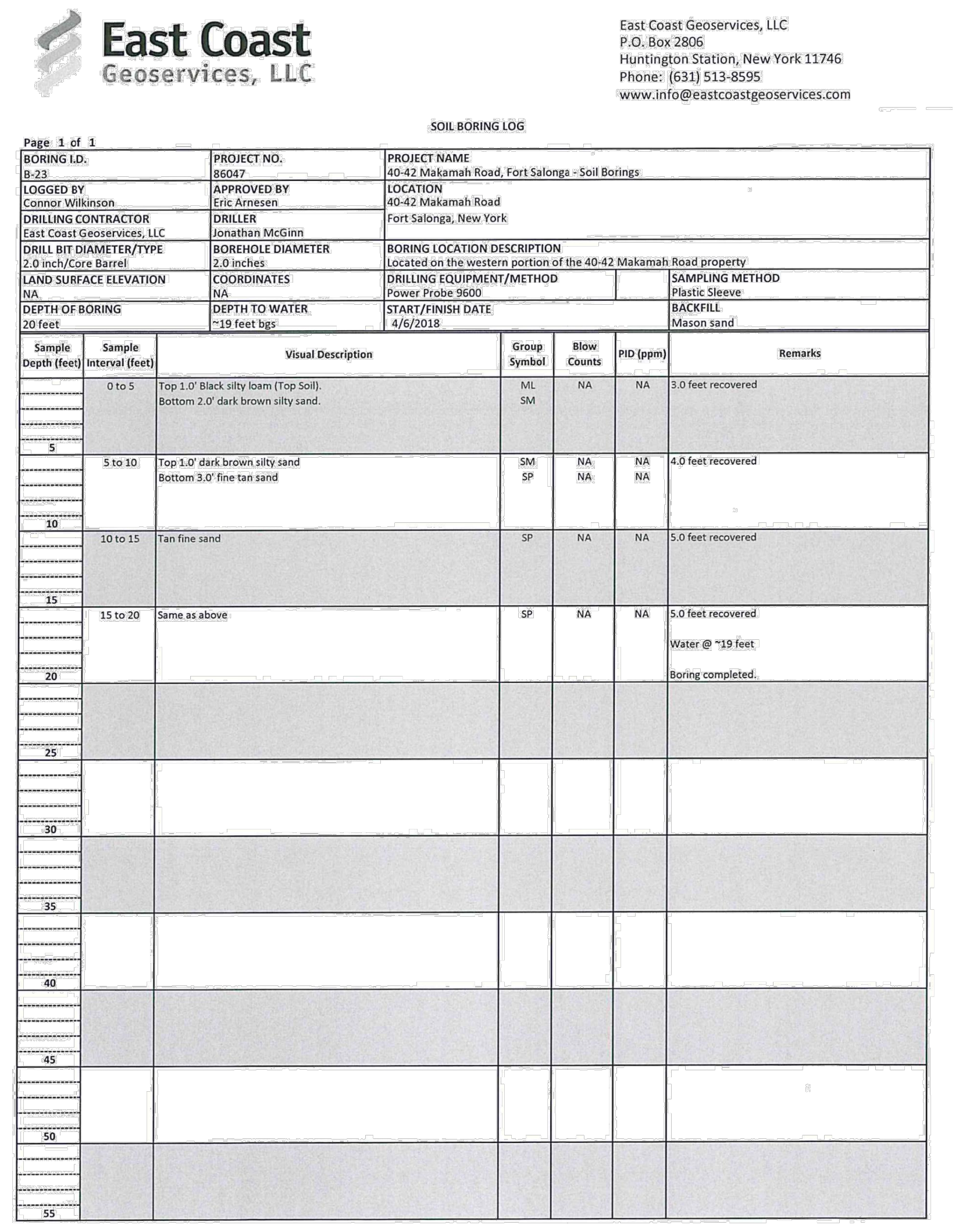

East Coast Geoservices, LLC
P.O. Box 2806
Huntington Station, New York 11746
Phone: (631) 513-8595
www.info@eastcoastgeoservices.com

SOIL BORING LOG

Page 1 of 1

BORING I.D.: B-23
PROJECT NO.: 86047
PROJECT NAME: 40-42 Makamah Road, Fort Salonga - Soil Borings
LOGGED BY: Connor Wilkinson
APPROVED BY: Eric Arnesen
LOCATION: 40-42 Makamah Road
Fort Salonga, New York
DRILLING CONTRACTOR: East Coast Geoservices, LLC
DRILLER: Jonathan McGinn
DRILL BIT DIAMETER/TYPE: 2.0 inch/Core Barrel
BOREHOLE DIAMETER: 2.0 inches
BORING LOCATION DESCRIPTION: Located on the western portion of the 40-42 Makamah Road property
LAND SURFACE ELEVATION: NA
COORDINATES: NA
DRILLING EQUIPMENT/METHOD: Power Probe 9600
SAMPLING METHOD: Plastic Sleeve
DEPTH OF BORING: 20 feet
DEPTH TO WATER: ~19 feet bgs
START/FINISH DATE: 4/6/2018
BACKFILL: Mason sand

Sample Depth (feet)	Sample Interval (feet)	Visual Description	Group Symbol	Blow Counts	PID (ppm)	Remarks
5	0 to 5	Top 1.0' Black silty loam (Top Soil). Bottom 2.0' dark brown silty sand.	ML SM	NA	NA	3.0 feet recovered
10	5 to 10	Top 1.0' dark brown silty sand Bottom 3.0' fine tan sand	SM SP	NA NA	NA NA	4.0 feet recovered
15	10 to 15	Tan fine sand	SP	NA	NA	5.0 feet recovered
20	15 to 20	Same as above	SP	NA	NA	5.0 feet recovered Water @ ~19 feet Boring completed.
25						
30						
35						
40						
45						
50						
55						

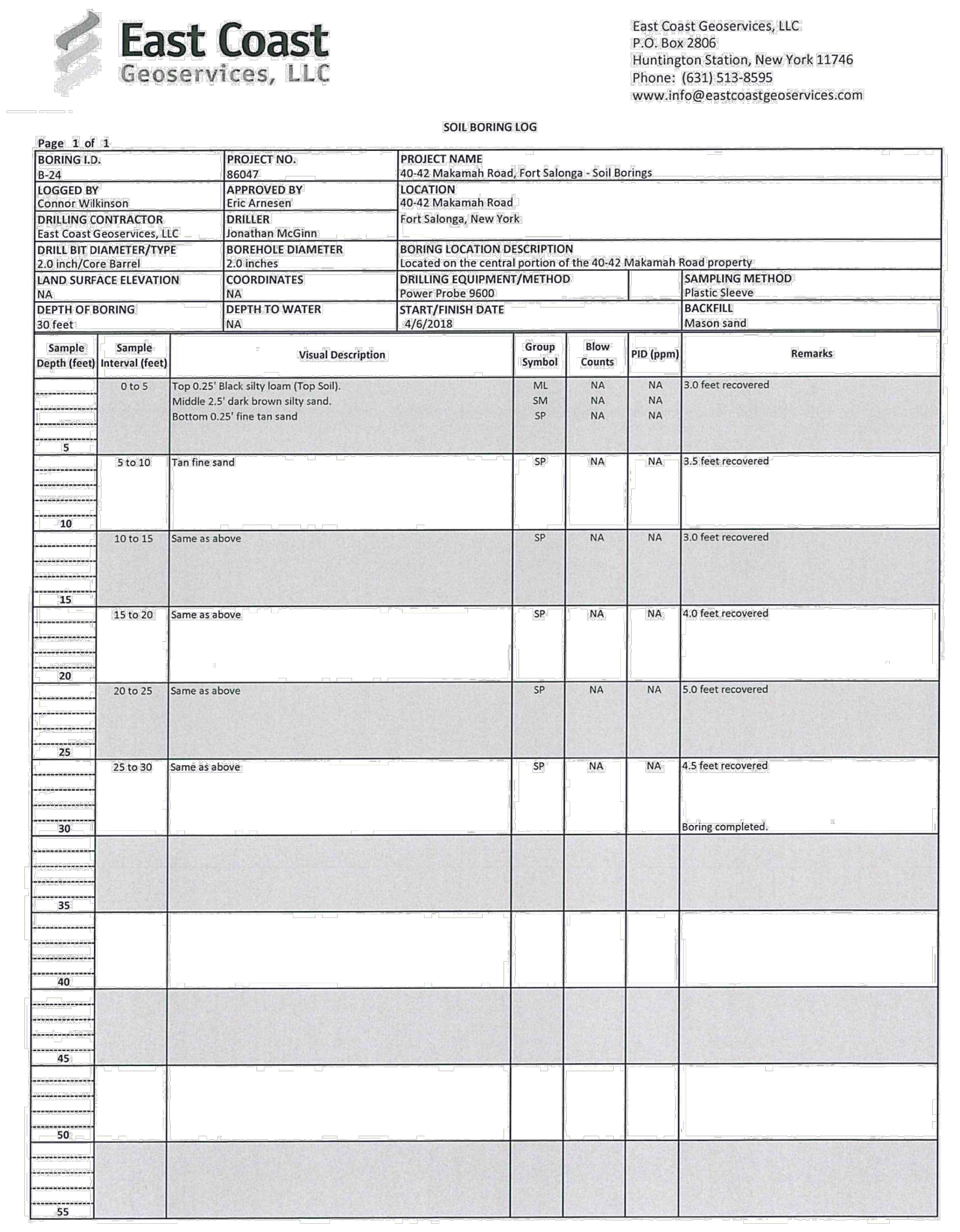

East Coast Geoservices, LLC
P.O. Box 2806
Huntington Station, New York 11746
Phone: (631) 513-8595
www.info@eastcoastgeoservices.com

SOIL BORING LOG

Page 1 of 1

BORING I.D.: B-24
PROJECT NO.: 86047
PROJECT NAME: 40-42 Makamah Road, Fort Salonga - Soil Borings
LOGGED BY: Connor Wilkinson
APPROVED BY: Eric Arnesen
LOCATION: 40-42 Makamah Road
Fort Salonga, New York
DRILLING CONTRACTOR: East Coast Geoservices, LLC
DRILLER: Jonathan McGinn
DRILL BIT DIAMETER/TYPE: 2.0 inch/Core Barrel
BOREHOLE DIAMETER: 2.0 inches
BORING LOCATION DESCRIPTION: Located on the central portion of the 40-42 Makamah Road property
LAND SURFACE ELEVATION: NA
COORDINATES: NA
DRILLING EQUIPMENT/METHOD: Power Probe 9600
SAMPLING METHOD: Plastic Sleeve
DEPTH OF BORING: 30 feet
DEPTH TO WATER: NA
START/FINISH DATE: 4/6/2018
BACKFILL: Mason sand

Sample Depth (feet)	Sample Interval (feet)	Visual Description	Group Symbol	Blow Counts	PID (ppm)	Remarks
5	0 to 5	Top 0.25' Black silty loam (Top Soil). Middle 2.5' dark brown silty sand. Bottom 0.25' fine tan sand	ML SM SP	NA NA NA	NA NA NA	3.0 feet recovered
10	5 to 10	Tan fine sand	SP	NA	NA	3.5 feet recovered
15	10 to 15	Same as above	SP	NA	NA	3.0 feet recovered
20	15 to 20	Same as above	SP	NA	NA	4.0 feet recovered
25	20 to 25	Same as above	SP	NA	NA	5.0 feet recovered
30	25 to 30	Same as above	SP	NA	NA	4.5 feet recovered Boring completed.
35						
40						
45						
50						
55						

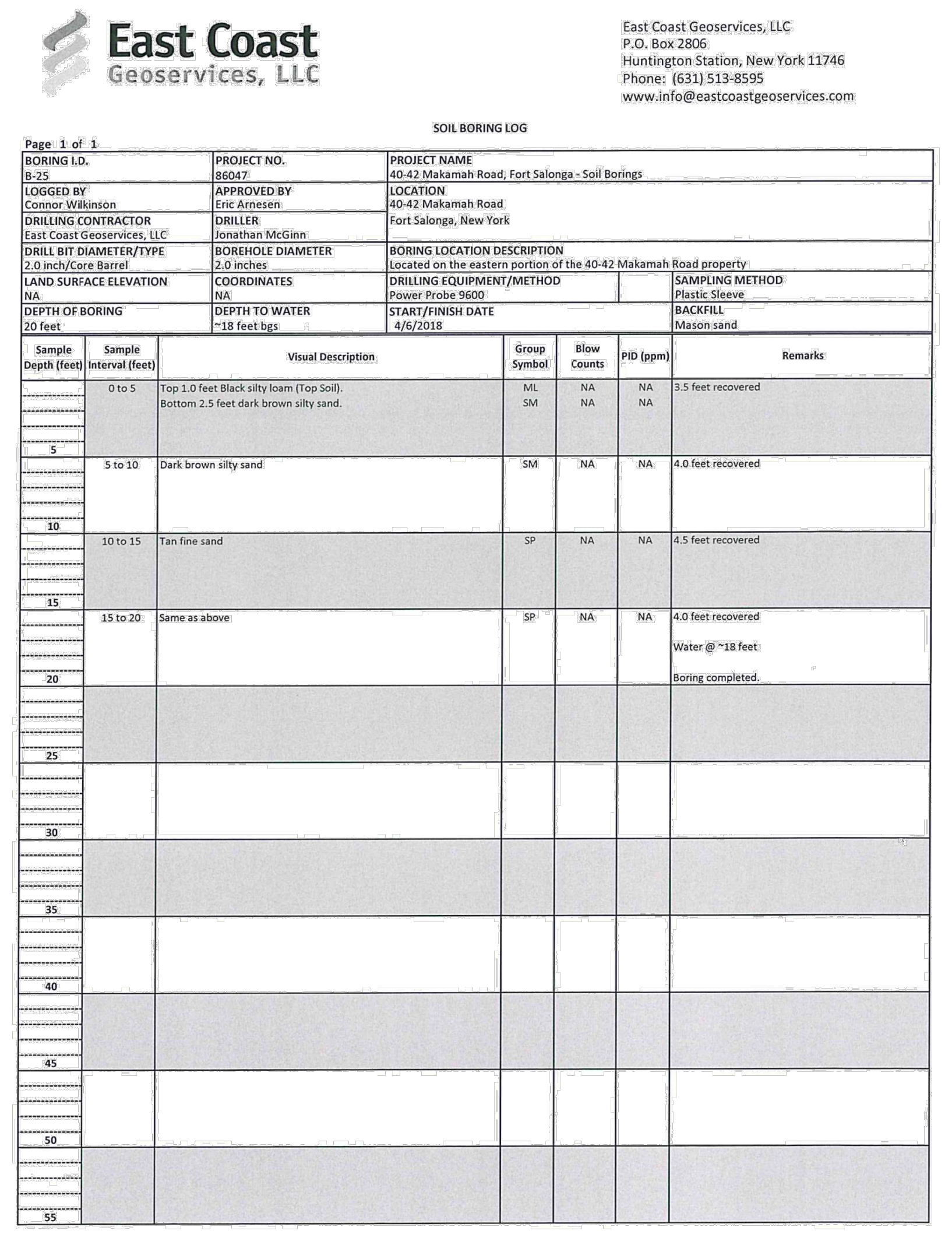

East Coast Geoservices, LLC
P.O. Box 2806
Huntington Station, New York 11746
Phone: (631) 513-8595
www.info@eastcoastgeoservices.com

SOIL BORING LOG

Page 1 of 1

BORING I.D.: B-25
PROJECT NO.: 86047
PROJECT NAME: 40-42 Makamah Road, Fort Salonga - Soil Borings
LOGGED BY: Connor Wilkinson
APPROVED BY: Eric Arnesen
LOCATION: 40-42 Makamah Road
Fort Salonga, New York
DRILLING CONTRACTOR: East Coast Geoservices, LLC
DRILLER: Jonathan McGinn
DRILL BIT DIAMETER/TYPE: 2.0 inch/Core Barrel
BOREHOLE DIAMETER: 2.0 inches
BORING LOCATION DESCRIPTION: Located on the eastern portion of the 40-42 Makamah Road property
LAND SURFACE ELEVATION: NA
COORDINATES: NA
DRILLING EQUIPMENT/METHOD: Power Probe 9600
SAMPLING METHOD: Plastic Sleeve
DEPTH OF BORING: 20 feet
DEPTH TO WATER: ~18 feet bgs
START/FINISH DATE: 4/6/2018
BACKFILL: Mason sand

Sample Depth (feet)	Sample Interval (feet)	Visual Description	Group Symbol	Blow Counts	PID (ppm)	Remarks
5	0 to 5	Top 1.0 feet Black silty loam (Top Soil). Bottom 2.5 feet dark brown silty sand.	ML SM	NA NA	NA NA	3.5 feet recovered
10	5 to 10	Dark brown silty sand	SM	NA	NA	4.0 feet recovered
15	10 to 15	Tan fine sand	SP	NA	NA	4.5 feet recovered
20	15 to 20	Same as above	SP	NA	NA	4.0 feet recovered Water @ ~18 feet Boring completed.
25						
30						
35						
40						
45						
50						
55						

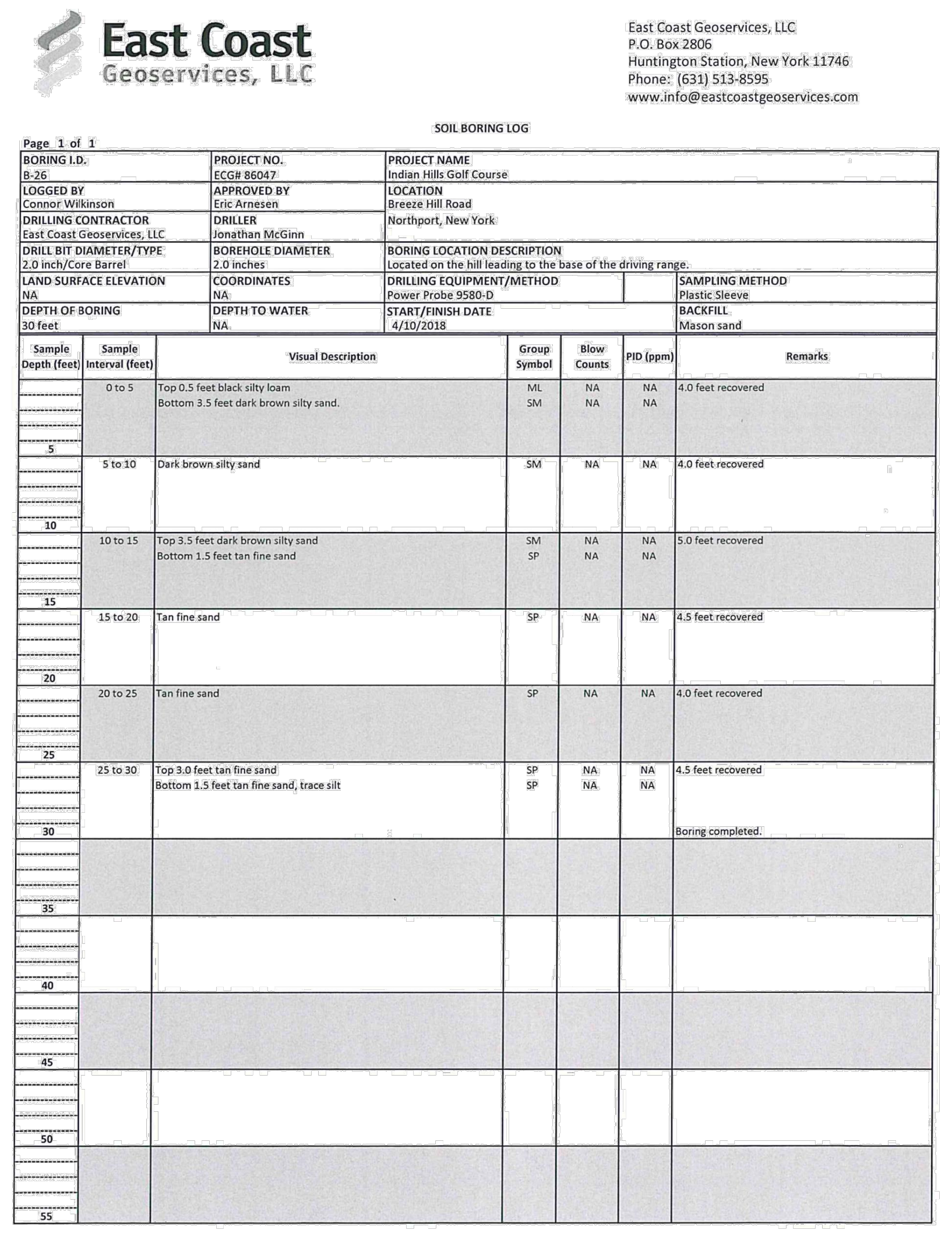

East Coast Geoservices, LLC
P.O. Box 2806
Huntington Station, New York 11746
Phone: (631) 513-8595
www.info@eastcoastgeoservices.com

SOIL BORING LOG

Page 1 of 1

BORING I.D.: B-26
PROJECT NO.: ECG# 86047
PROJECT NAME: Indian Hills Golf Course
LOGGED BY: Connor Wilkinson
APPROVED BY: Eric Arnesen
LOCATION: Breeze Hill Road
Northport, New York
DRILLING CONTRACTOR: East Coast Geoservices, LLC
DRILLER: Jonathan McGinn
DRILL BIT DIAMETER/TYPE: 2.0 inch/Core Barrel
BOREHOLE DIAMETER: 2.0 inches
BORING LOCATION DESCRIPTION: Located on the hill leading to the base of the driving range.
LAND SURFACE ELEVATION: NA
COORDINATES: NA
DRILLING EQUIPMENT/METHOD: Power Probe 9580-D
SAMPLING METHOD: Plastic Sleeve
DEPTH OF BORING: 30 feet
DEPTH TO WATER: NA
START/FINISH DATE: 4/10/2018
BACKFILL: Mason sand

Sample Depth (feet)	Sample Interval (feet)	Visual Description	Group Symbol	Blow Counts	PID (ppm)	Remarks
5	0 to 5	Top 0.5 feet black silty loam Bottom 3.5 feet dark brown silty sand.	ML SM	NA NA	NA NA	4.0 feet recovered
10	5 to 10	Dark brown silty sand	SM	NA	NA	4.0 feet recovered
15	10 to 15	Top 3.5 feet dark brown silty sand Bottom 1.5 feet tan fine sand	SM SP	NA NA	NA NA	5.0 feet recovered
20	15 to 20	Tan fine sand	SP	NA	NA	4.5 feet recovered
25	20 to 25	Tan fine sand	SP	NA	NA	4.0 feet recovered
30	25 to 30	Top 3.0 feet tan fine sand Bottom 1.5 feet tan fine sand, trace silt	SP SP	NA NA	NA NA	4.5 feet recovered Boring completed.
35						
40						
45						
50						
55						

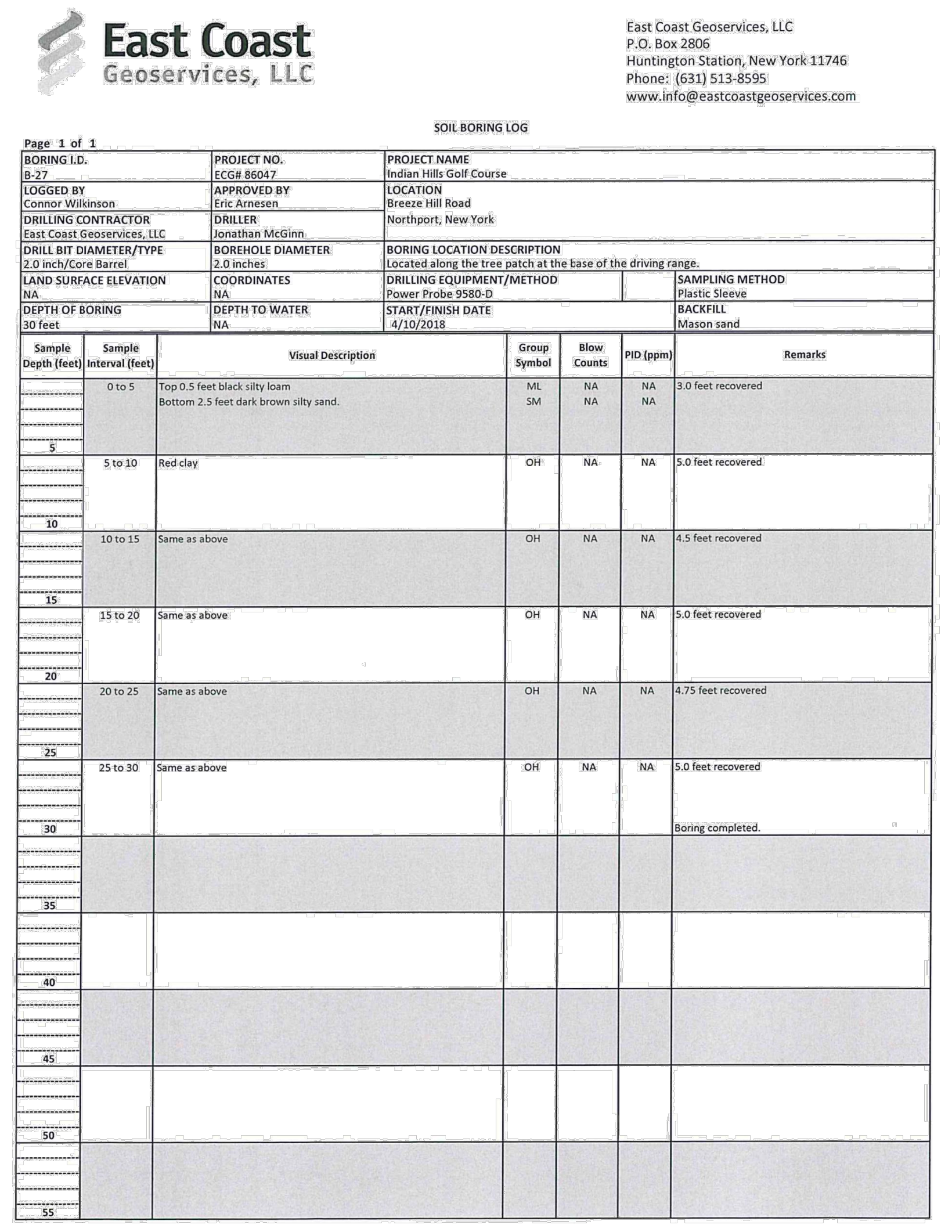

East Coast Geoservices, LLC
P.O. Box 2806
Huntington Station, New York 11746
Phone: (631) 513-8595
www.info@eastcoastgeoservices.com

SOIL BORING LOG

Page 1 of 1

BORING I.D.: B-27
PROJECT NO.: ECG# 86047
PROJECT NAME: Indian Hills Golf Course
LOGGED BY: Connor Wilkinson
APPROVED BY: Eric Arnesen
LOCATION: Breeze Hill Road
Northport, New York
DRILLING CONTRACTOR: East Coast Geoservices, LLC
DRILLER: Jonathan McGinn
DRILL BIT DIAMETER/TYPE: 2.0 inch/Core Barrel
BOREHOLE DIAMETER: 2.0 inches
BORING LOCATION DESCRIPTION: Located along the tree patch at the base of the driving range.
LAND SURFACE ELEVATION: NA
COORDINATES: NA
DRILLING EQUIPMENT/METHOD: Power Probe 9580-D
SAMPLING METHOD: Plastic Sleeve
DEPTH OF BORING: 30 feet
DEPTH TO WATER: NA
START/FINISH DATE: 4/10/2018
BACKFILL: Mason sand

Sample Depth (feet)	Sample Interval (feet)	Visual Description	Group Symbol	Blow Counts	PID (ppm)	Remarks
5	0 to 5	Top 0.5 feet black silty loam Bottom 2.5 feet dark brown silty sand.	ML SM	NA NA	NA NA	3.0 feet recovered
10	5 to 10	Red clay	OH	NA	NA	5.0 feet recovered
15	10 to 15	Same as above	OH	NA	NA	4.5 feet recovered
20	15 to 20	Same as above	OH	NA	NA	5.0 feet recovered
25	20 to 25	Same as above	OH	NA	NA	4.75 feet recovered
30	25 to 30	Same as above	OH	NA	NA	5.0 feet recovered Boring completed.
35						
40						
45						
50						
55						

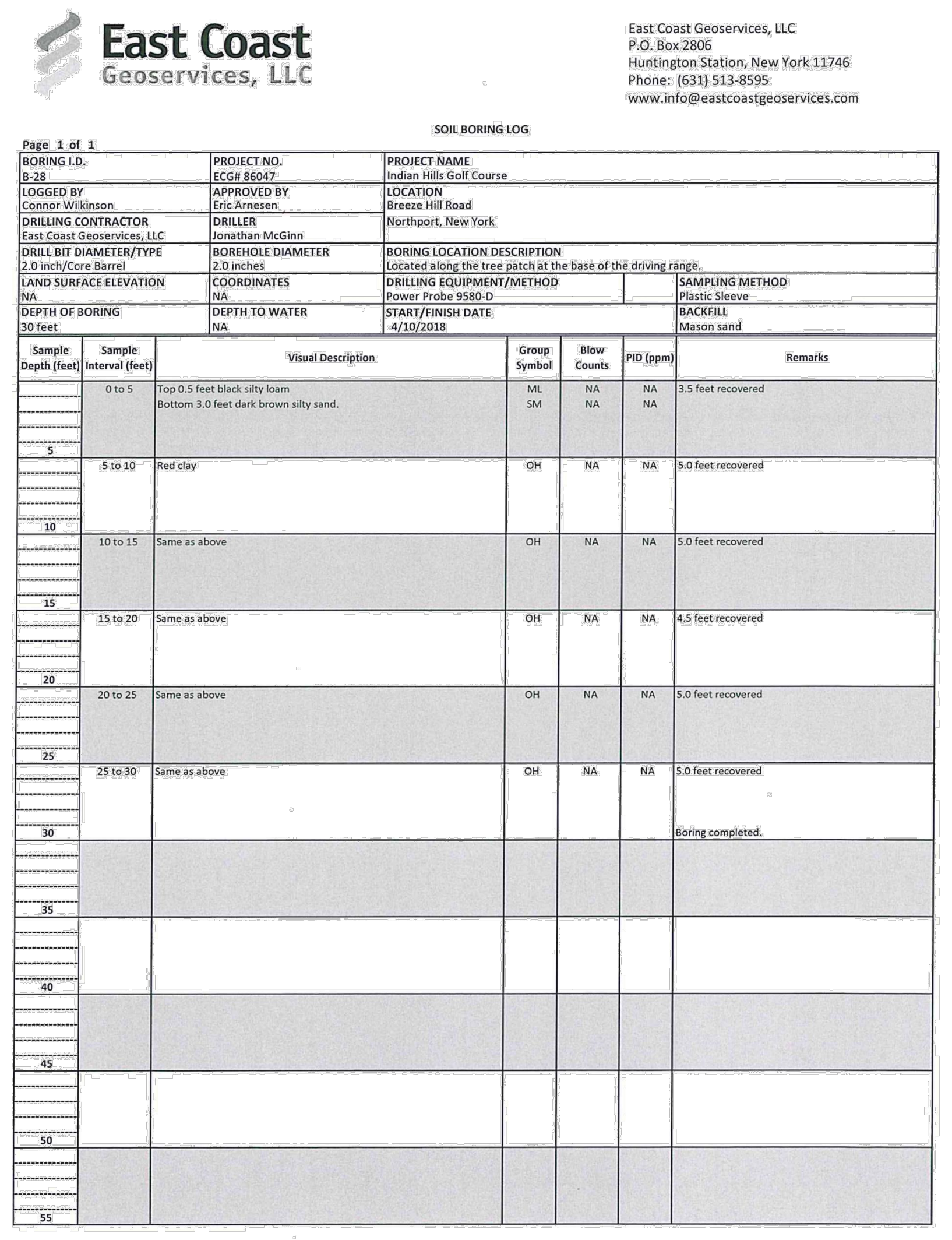

East Coast Geoservices, LLC
P.O. Box 2806
Huntington Station, New York 11746
Phone: (631) 513-8595
www.info@eastcoastgeoservices.com

SOIL BORING LOG

Page 1 of 1

BORING I.D.: B-28
PROJECT NO.: ECG# 86047
PROJECT NAME: Indian Hills Golf Course
LOGGED BY: Connor Wilkinson
APPROVED BY: Eric Arnesen
LOCATION: Breeze Hill Road
Northport, New York
DRILLING CONTRACTOR: East Coast Geoservices, LLC
DRILLER: Jonathan McGinn
DRILL BIT DIAMETER/TYPE: 2.0 inch/Core Barrel
BOREHOLE DIAMETER: 2.0 inches
BORING LOCATION DESCRIPTION: Located along the tree patch at the base of the driving range.
LAND SURFACE ELEVATION: NA
COORDINATES: NA
DRILLING EQUIPMENT/METHOD: Power Probe 9580-D
SAMPLING METHOD: Plastic Sleeve
DEPTH OF BORING: 30 feet
DEPTH TO WATER: NA
START/FINISH DATE: 4/10/2018
BACKFILL: Mason sand

Sample Depth (feet)	Sample Interval (feet)	Visual Description	Group Symbol	Blow Counts	PID (ppm)	Remarks
5	0 to 5	Top 0.5 feet black silty loam Bottom 3.0 feet dark brown silty sand.	ML SM	NA NA	NA NA	3.5 feet recovered
10	5 to 10	Red clay	OH	NA	NA	5.0 feet recovered
15	10 to 15	Same as above	OH	NA	NA	5.0 feet recovered
20	15 to 20	Same as above	OH	NA	NA	4.5 feet recovered
25	20 to 25	Same as above	OH	NA	NA	5.0 feet recovered
30	25 to 30	Same as above	OH	NA	NA	5.0 feet recovered Boring completed.
35						
40						
45						
50						
55						

FOR TOWN USE

No.	REVISION	DATE

OWNER
I.H.C.C., INC. AND
ROBERG REVOCABLE TRUST
21 BREEZE HILL ROAD
NORTHPORT, NY, 11768
(631) 261 - 5700

APPLICANT:
THE PRESERVE AT INDIAN HILLS
1 RABRO DRIVE, SUITE 100
HAUPPAUGE, N.Y. 11788
(631) 351 - 4000

TEST BORING LOGS - 2

FOR

THE PRESERVE AT INDIAN HILLS

SITUATED AT

NORTHPORT

TOWN OF HUNTINGTON, SUFFOLK COUNTY, NEW YORK
S.C.T.M.: DISTRICT: 0400, SECT. 014, BLK. 04, LOTS 1 AND 2
DISTRICT 0400, SECT. 015, BLK. 01, LOTS 3.1, 3.2, 11, 12, 16, 19 AND P/O 22

NELSON + POPE
engineers • architects • surveyors
70 Maxess Road, Melville, NY 11747 • 631.427.5665 • nelsonpope.com

DRAWN BY: GEO	CADD No.: 86047 CSP TB_LOGS 2021.DWG	SCALE: NONE	DRAWING NO.: TB - 104
CHECKED BY: JM	FILE NO.: 400-014		
DATE: OCTOBER, 2021	PROJECT NO.: 86047		SHEET NO.: 43 OF 44

G:\projects\86047\FINALS\CONDOMINIUM\86047 CSP TB_LOGS 2021.dwg, 43 OF 44 TEST BORING LOGS - 2, 10/11/2021 3:06:58 PM

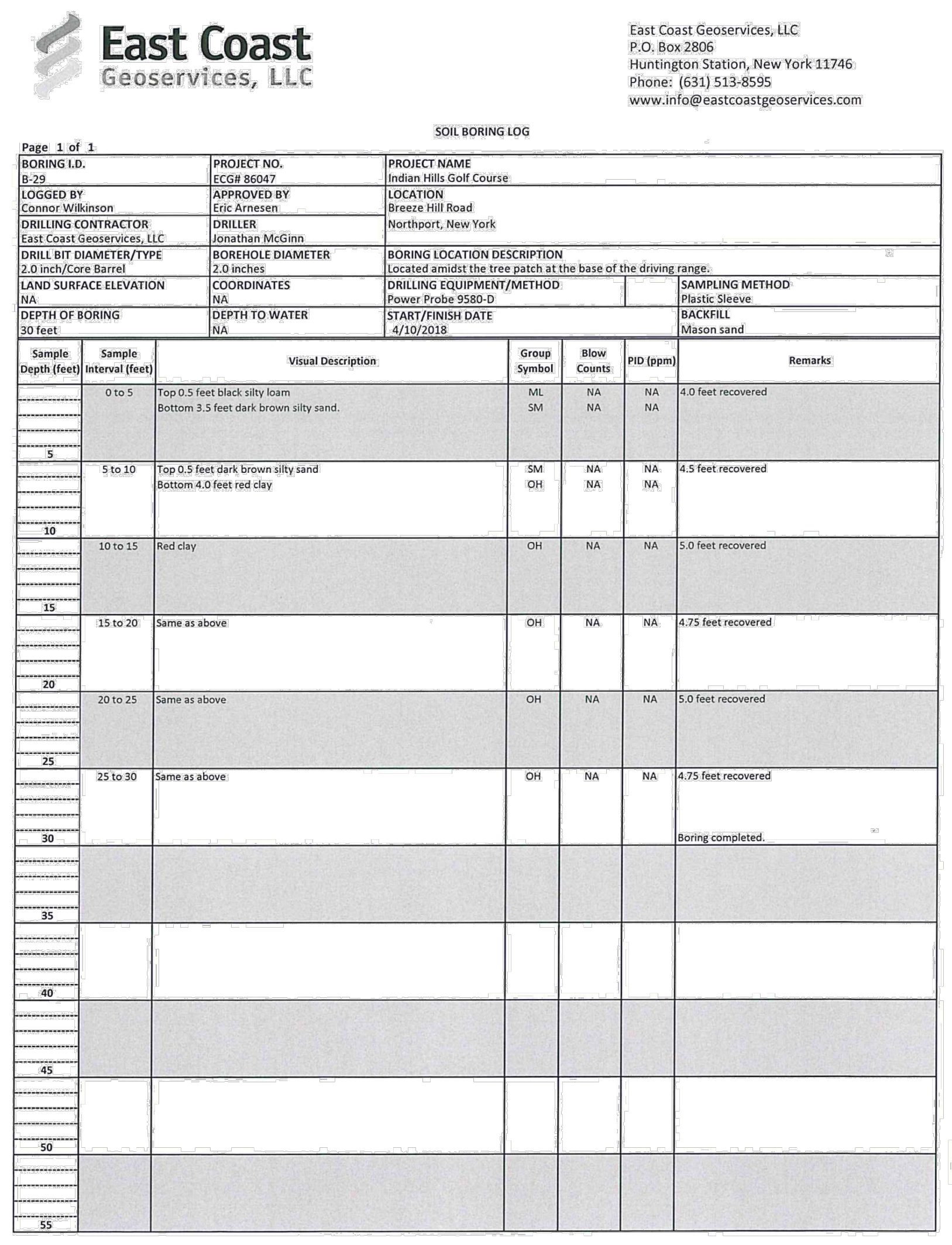

East Coast Geoservices, LLC
P.O. Box 2806
Huntington Station, New York 11746
Phone: (631) 513-8595
www.info@eastcoastgeoservices.com

SOIL BORING LOG

Page 1 of 1

BORING I.D. B-29	PROJECT NO. ECG# 86047	PROJECT NAME Indian Hills Golf Course	
LOGGED BY Connor Wilkinson	APPROVED BY Eric Arnesen	LOCATION Breeze Hill Road Northport, New York	
DRILLING CONTRACTOR East Coast Geoservices, LLC	DRILLER Jonathan McGinn		
DRILL BIT DIAMETER/TYPE 2.0 inch/Core Barrel	BOREHOLE DIAMETER 2.0 inches	BORING LOCATION DESCRIPTION Located amidst the tree patch at the base of the driving range.	
LAND SURFACE ELEVATION NA	COORDINATES NA	DRILLING EQUIPMENT/METHOD Power Probe 9580-D	SAMPLING METHOD Plastic Sleeve
DEPTH OF BORING 30 feet	DEPTH TO WATER NA	START/FINISH DATE 4/10/2018	BACKFILL Mason sand

Sample Depth (feet)	Sample Interval (feet)	Visual Description	Group Symbol	Blow Counts	PID (ppm)	Remarks
5	0 to 5	Top 0.5 feet black silty loam Bottom 3.5 feet dark brown silty sand.	ML SM	NA NA	NA NA	4.0 feet recovered
10	5 to 10	Top 0.5 feet dark brown silty sand Bottom 4.0 feet red clay	SM OH	NA NA	NA NA	4.5 feet recovered
15	10 to 15	Red clay	OH	NA	NA	5.0 feet recovered
20	15 to 20	Same as above	OH	NA	NA	4.75 feet recovered
25	20 to 25	Same as above	OH	NA	NA	5.0 feet recovered
30	25 to 30	Same as above	OH	NA	NA	4.75 feet recovered Boring completed.
35						
40						
45						
50						
55						

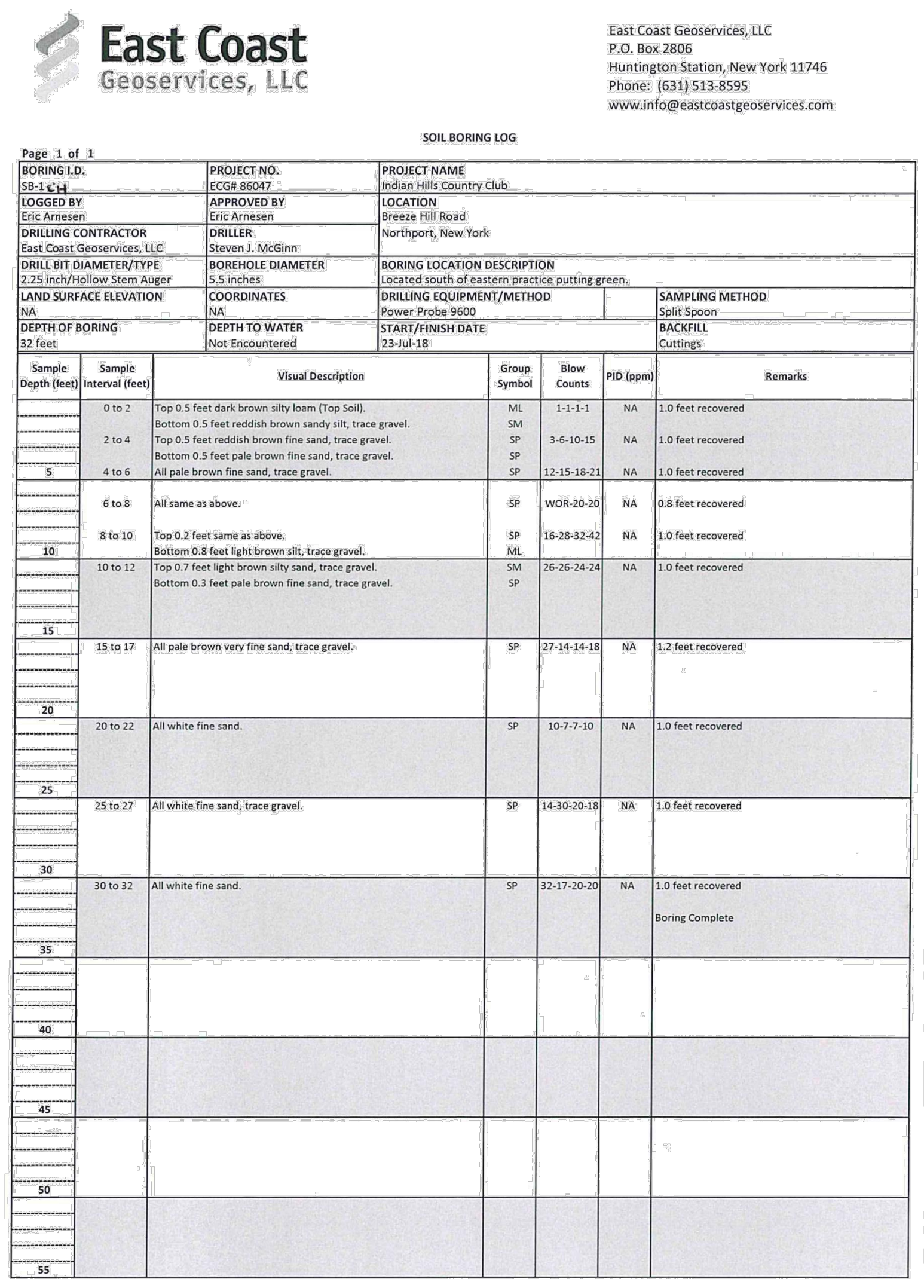

East Coast Geoservices, LLC
P.O. Box 2806
Huntington Station, New York 11746
Phone: (631) 513-8595
www.info@eastcoastgeoservices.com

SOIL BORING LOG

Page 1 of 1

BORING I.D. SB-1CH	PROJECT NO. ECG# 86047	PROJECT NAME Indian Hills Country Club	
LOGGED BY Eric Arnesen	APPROVED BY Eric Arnesen	LOCATION Breeze Hill Road Northport, New York	
DRILLING CONTRACTOR East Coast Geoservices, LLC	DRILLER Steven J. McGinn		
DRILL BIT DIAMETER/TYPE 2.25 inch/Hollow Stem Auger	BOREHOLE DIAMETER 5.5 inches	BORING LOCATION DESCRIPTION Located south of eastern practice putting green.	
LAND SURFACE ELEVATION NA	COORDINATES NA	DRILLING EQUIPMENT/METHOD Power Probe 9600	SAMPLING METHOD Split Spoon
DEPTH OF BORING 32 feet	DEPTH TO WATER Not Encountered	START/FINISH DATE 23-Jul-18	BACKFILL Cuttings

Sample Depth (feet)	Sample Interval (feet)	Visual Description	Group Symbol	Blow Counts	PID (ppm)	Remarks
	0 to 2	Top 0.5 feet dark brown silty loam (Top Soil). Bottom 0.5 feet reddish brown sandy silt, trace gravel.	ML SM	1-1-1-1	NA	1.0 feet recovered
	2 to 4	Top 0.5 feet reddish brown fine sand, trace gravel. Bottom 0.5 feet pale brown fine sand, trace gravel.	SP SP	3-6-10-15	NA	1.0 feet recovered
5	4 to 6	All pale brown fine sand, trace gravel.	SP	12-15-18-21	NA	1.0 feet recovered
	6 to 8	All same as above.	SP	WOR-20-20	NA	0.8 feet recovered
10	8 to 10	Top 0.2 feet same as above. Bottom 0.8 feet light brown silt, trace gravel.	SP ML	16-28-32-42	NA	1.0 feet recovered
15	10 to 12	Top 0.7 feet light brown silty sand, trace gravel. Bottom 0.3 feet pale brown fine sand, trace gravel.	SM SP	26-26-24-24	NA	1.0 feet recovered
20	15 to 17	All pale brown very fine sand, trace gravel.	SP	27-14-14-18	NA	1.2 feet recovered
25	20 to 22	All white fine sand.	SP	10-7-7-10	NA	1.0 feet recovered
30	25 to 27	All white fine sand, trace gravel.	SP	14-30-20-18	NA	1.0 feet recovered
35	30 to 32	All white fine sand.	SP	32-17-20-20	NA	1.0 feet recovered Boring Complete
40						
45						
50						
55						

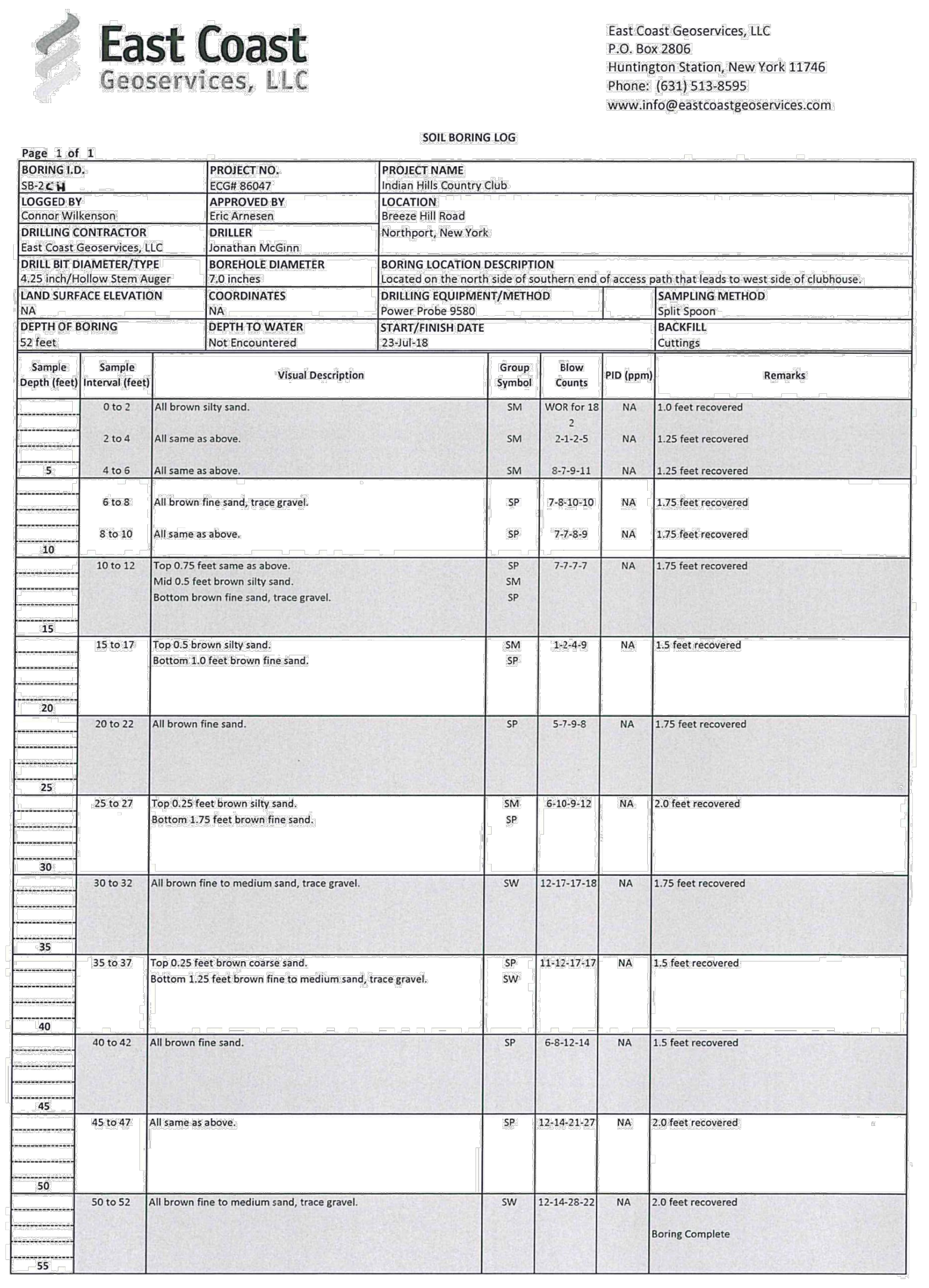

East Coast Geoservices, LLC
P.O. Box 2806
Huntington Station, New York 11746
Phone: (631) 513-8595
www.info@eastcoastgeoservices.com

SOIL BORING LOG

Page 1 of 1

BORING I.D. SB-2CH	PROJECT NO. ECG# 86047	PROJECT NAME Indian Hills Country Club	
LOGGED BY Connor Wilkenson	APPROVED BY Eric Arnesen	LOCATION Breeze Hill Road Northport, New York	
DRILLING CONTRACTOR East Coast Geoservices, LLC	DRILLER Jonathan McGinn		
DRILL BIT DIAMETER/TYPE 4.25 inch/Hollow Stem Auger	BOREHOLE DIAMETER 7.0 inches	BORING LOCATION DESCRIPTION Located on the north side of southern end of access path that leads to west side of clubhouse.	
LAND SURFACE ELEVATION NA	COORDINATES NA	DRILLING EQUIPMENT/METHOD Power Probe 9580	SAMPLING METHOD Split Spoon
DEPTH OF BORING 52 feet	DEPTH TO WATER Not Encountered	START/FINISH DATE 23-Jul-18	BACKFILL Cuttings

Sample Depth (feet)	Sample Interval (feet)	Visual Description	Group Symbol	Blow Counts	PID (ppm)	Remarks
	0 to 2	All brown silty sand.	SM	WOR for 18 2	NA	1.0 feet recovered
	2 to 4	All same as above.	SM	2-1-2-5	NA	1.25 feet recovered
5	4 to 6	All same as above.	SM	8-7-9-11	NA	1.25 feet recovered
	6 to 8	All brown fine sand, trace gravel.	SP	7-8-10-10	NA	1.75 feet recovered
10	8 to 10	All same as above.	SP	7-7-8-9	NA	1.75 feet recovered
15	10 to 12	Top 0.75 feet same as above. Mid 0.5 feet brown silty sand. Bottom brown fine sand, trace gravel.	SP SM SP	7-7-7-7	NA	1.75 feet recovered
20	15 to 17	Top 0.5 brown silty sand. Bottom 1.0 feet brown fine sand.	SM SP	1-2-4-9	NA	1.5 feet recovered
25	20 to 22	All brown fine sand.	SP	5-7-9-8	NA	1.75 feet recovered
30	25 to 27	Top 0.25 feet brown silty sand. Bottom 1.75 feet brown fine sand.	SM SP	6-10-9-12	NA	2.0 feet recovered
35	30 to 32	All brown fine to medium sand, trace gravel.	SW	12-17-17-18	NA	1.75 feet recovered
40	35 to 37	Top 0.25 feet brown coarse sand. Bottom 1.25 feet brown fine to medium sand, trace gravel.	SP SW	11-12-17-17	NA	1.5 feet recovered
45	40 to 42	All brown fine sand.	SP	6-8-12-14	NA	1.5 feet recovered
50	45 to 47	All same as above.	SP	12-14-21-27	NA	2.0 feet recovered
55	50 to 52	All brown fine to medium sand, trace gravel.	SW	12-14-28-22	NA	2.0 feet recovered Boring Complete

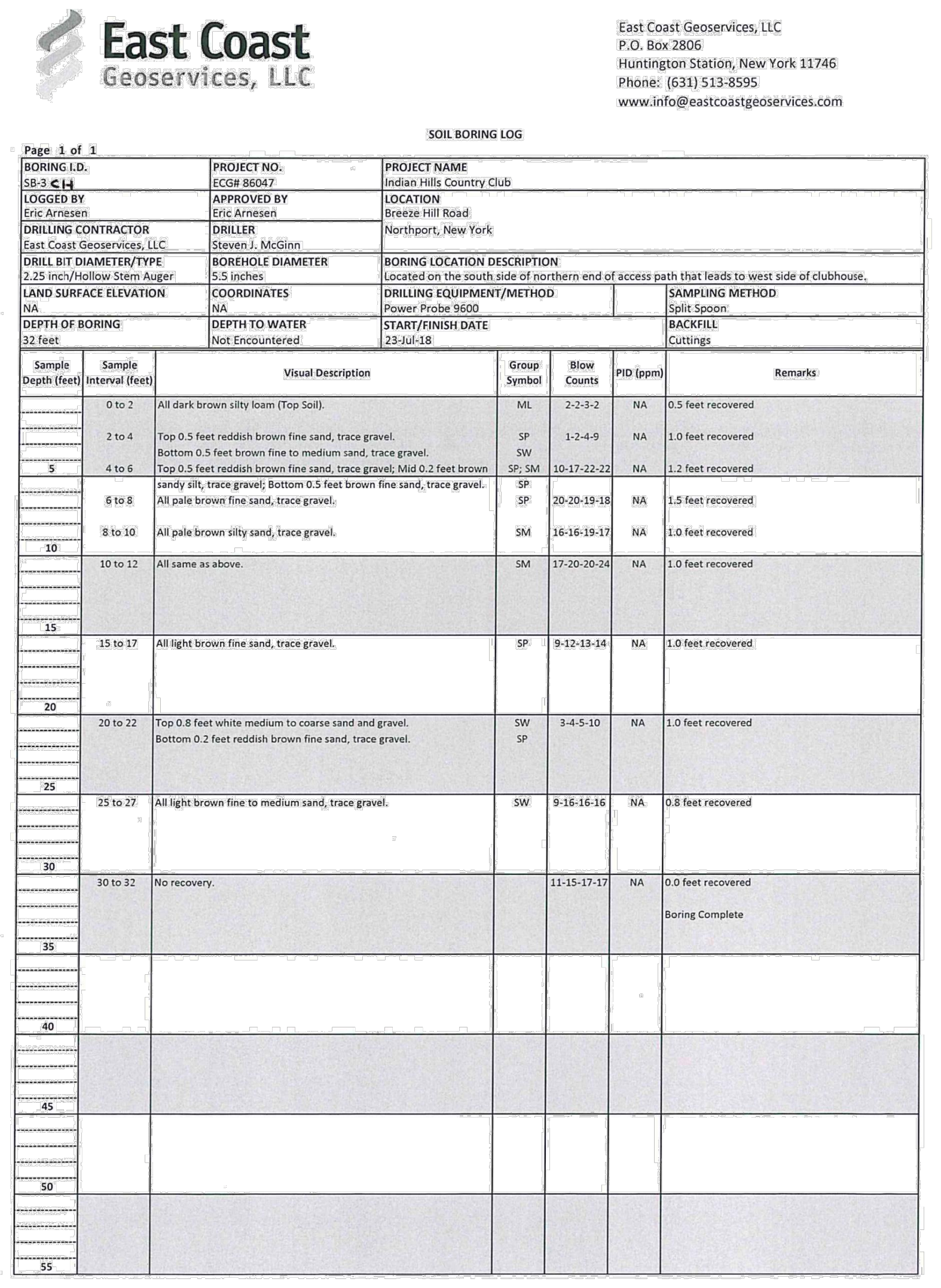

East Coast Geoservices, LLC
P.O. Box 2806
Huntington Station, New York 11746
Phone: (631) 513-8595
www.info@eastcoastgeoservices.com

SOIL BORING LOG

Page 1 of 1

BORING I.D. SB-3CH	PROJECT NO. ECG# 86047	PROJECT NAME Indian Hills Country Club	
LOGGED BY Eric Arnesen	APPROVED BY Eric Arnesen	LOCATION Breeze Hill Road Northport, New York	
DRILLING CONTRACTOR East Coast Geoservices, LLC	DRILLER Steven J. McGinn		
DRILL BIT DIAMETER/TYPE 2.25 inch/Hollow Stem Auger	BOREHOLE DIAMETER 5.5 inches	BORING LOCATION DESCRIPTION Located on the south side of northern end of access path that leads to west side of clubhouse.	
LAND SURFACE ELEVATION NA	COORDINATES NA	DRILLING EQUIPMENT/METHOD Power Probe 9600	SAMPLING METHOD Split Spoon
DEPTH OF BORING 32 feet	DEPTH TO WATER Not Encountered	START/FINISH DATE 23-Jul-18	BACKFILL Cuttings

Sample Depth (feet)	Sample Interval (feet)	Visual Description	Group Symbol	Blow Counts	PID (ppm)	Remarks
	0 to 2	All dark brown silty loam (Top Soil).	ML	2-2-3-2	NA	0.5 feet recovered
	2 to 4	Top 0.5 feet reddish brown fine sand, trace gravel. Bottom 0.5 feet brown fine to medium sand, trace gravel.	SP SW	1-2-4-9	NA	1.0 feet recovered
5	4 to 6	Top 0.5 feet reddish brown fine sand, trace gravel; Mid 0.2 feet brown sandy silt, trace gravel; Bottom 0.5 feet brown fine sand, trace gravel.	SP; SM SP	10-17-22-22	NA	1.2 feet recovered
	6 to 8	All pale brown fine sand, trace gravel.	SP	20-20-19-18	NA	1.5 feet recovered
10	8 to 10	All pale brown silty sand, trace gravel.	SM	16-16-19-17	NA	1.0 feet recovered
15	10 to 12	All same as above.	SM	17-20-20-24	NA	1.0 feet recovered
20	15 to 17	All light brown fine sand, trace gravel.	SP	9-12-13-14	NA	1.0 feet recovered
25	20 to 22	Top 0.8 feet white medium to coarse sand and gravel. Bottom 0.2 feet reddish brown fine sand, trace gravel.	SW SP	3-4-5-10	NA	1.0 feet recovered
30	25 to 27	All light brown fine to medium sand, trace gravel.	SW	9-16-16-16	NA	0.8 feet recovered
35	30 to 32	No recovery.		11-15-17-17	NA	0.0 feet recovered Boring Complete
40						
45						
50						
55						

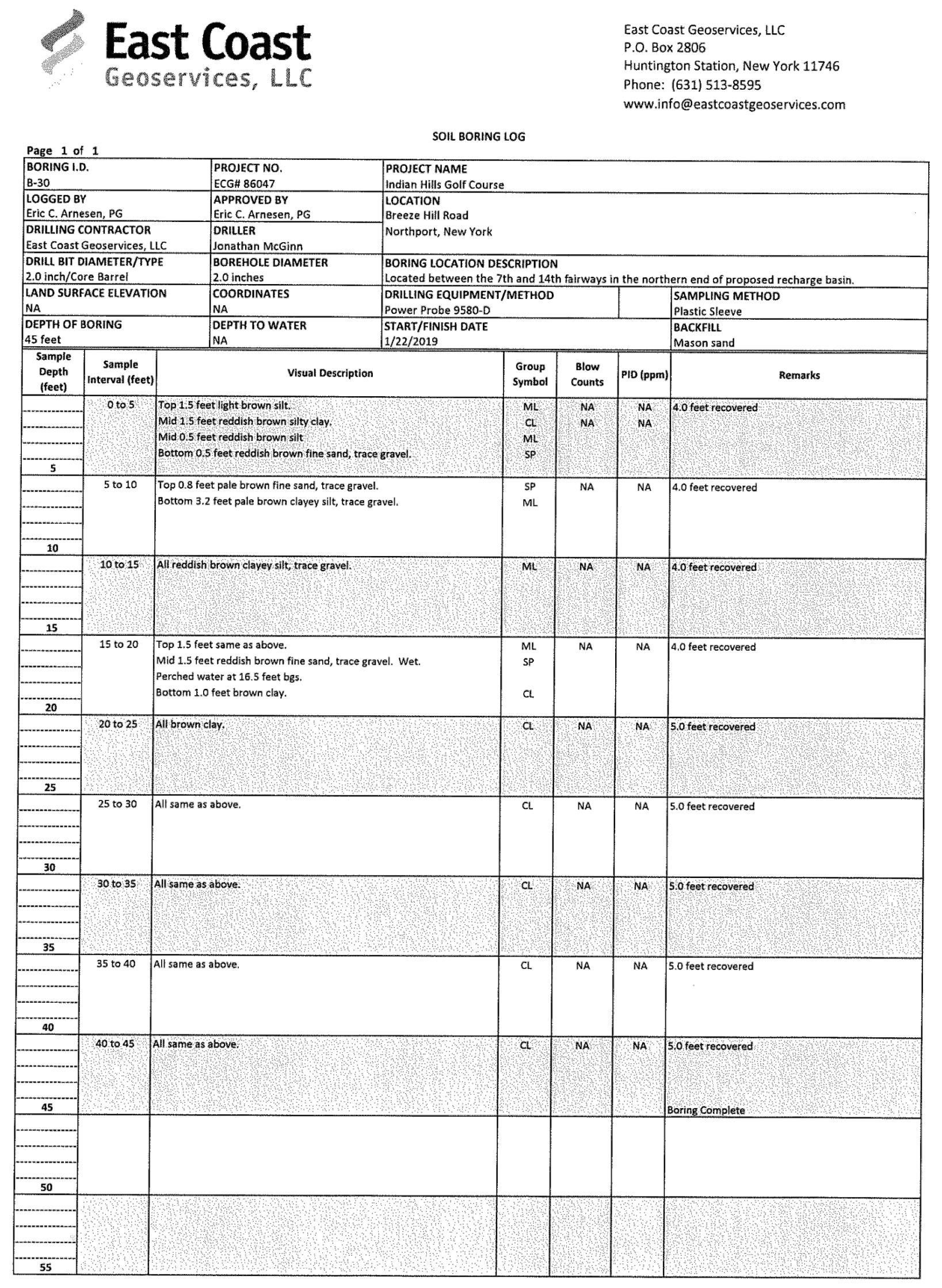

East Coast Geoservices, LLC
P.O. Box 2806
Huntington Station, New York 11746
Phone: (631) 513-8595
www.info@eastcoastgeoservices.com

SOIL BORING LOG

Page 1 of 1

BORING I.D. B-30	PROJECT NO. ECG# 86047	PROJECT NAME Indian Hills Golf Course	
LOGGED BY Eric C. Arnesen, PG	APPROVED BY Eric C. Arnesen, PG	LOCATION Breeze Hill Road Northport, New York	
DRILLING CONTRACTOR East Coast Geoservices, LLC	DRILLER Jonathan McGinn		
DRILL BIT DIAMETER/TYPE 2.0 inch/Core Barrel	BOREHOLE DIAMETER 2.0 inches	BORING LOCATION DESCRIPTION Located between the 7th and 14th fairways in the northern end of proposed recharge basin.	
LAND SURFACE ELEVATION NA	COORDINATES NA	DRILLING EQUIPMENT/METHOD Power Probe 9580-D	SAMPLING METHOD Plastic Sleeve
DEPTH OF BORING 45 feet	DEPTH TO WATER NA	START/FINISH DATE 1/22/2019	BACKFILL Mason sand

Sample Depth (feet)	Sample Interval (feet)	Visual Description	Group Symbol	Blow Counts	PID (ppm)	Remarks
5	0 to 5	Top 1.5 feet light brown silt. Mid 1.5 feet reddish brown silty clay. Mid 0.5 feet reddish brown silt Bottom 0.5 feet reddish brown fine sand, trace gravel.	ML CL ML SP	NA NA	NA NA	4.0 feet recovered
10	5 to 10	Top 0.8 feet pale brown fine sand, trace gravel. Bottom 3.2 feet pale brown clayey silt, trace gravel.	SP ML	NA	NA	4.0 feet recovered
15	10 to 15	All reddish brown clayey silt, trace gravel.	ML	NA	NA	4.0 feet recovered
20	15 to 20	Top 1.5 feet same as above. Mid 1.5 feet reddish brown fine sand, trace gravel. Wet. Perched water at 16.5 feet bgs. Bottom 1.0 feet brown clay.	ML SP CL	NA	NA	4.0 feet recovered
25	20 to 25	All brown clay.	CL	NA	NA	5.0 feet recovered
30	25 to 30	All same as above.	CL	NA	NA	5.0 feet recovered
35	30 to 35	All same as above.	CL	NA	NA	5.0 feet recovered
40	35 to 40	All same as above.	CL	NA	NA	5.0 feet recovered
45	40 to 45	All same as above.	CL	NA	NA	5.0 feet recovered Boring Complete
50						
55						

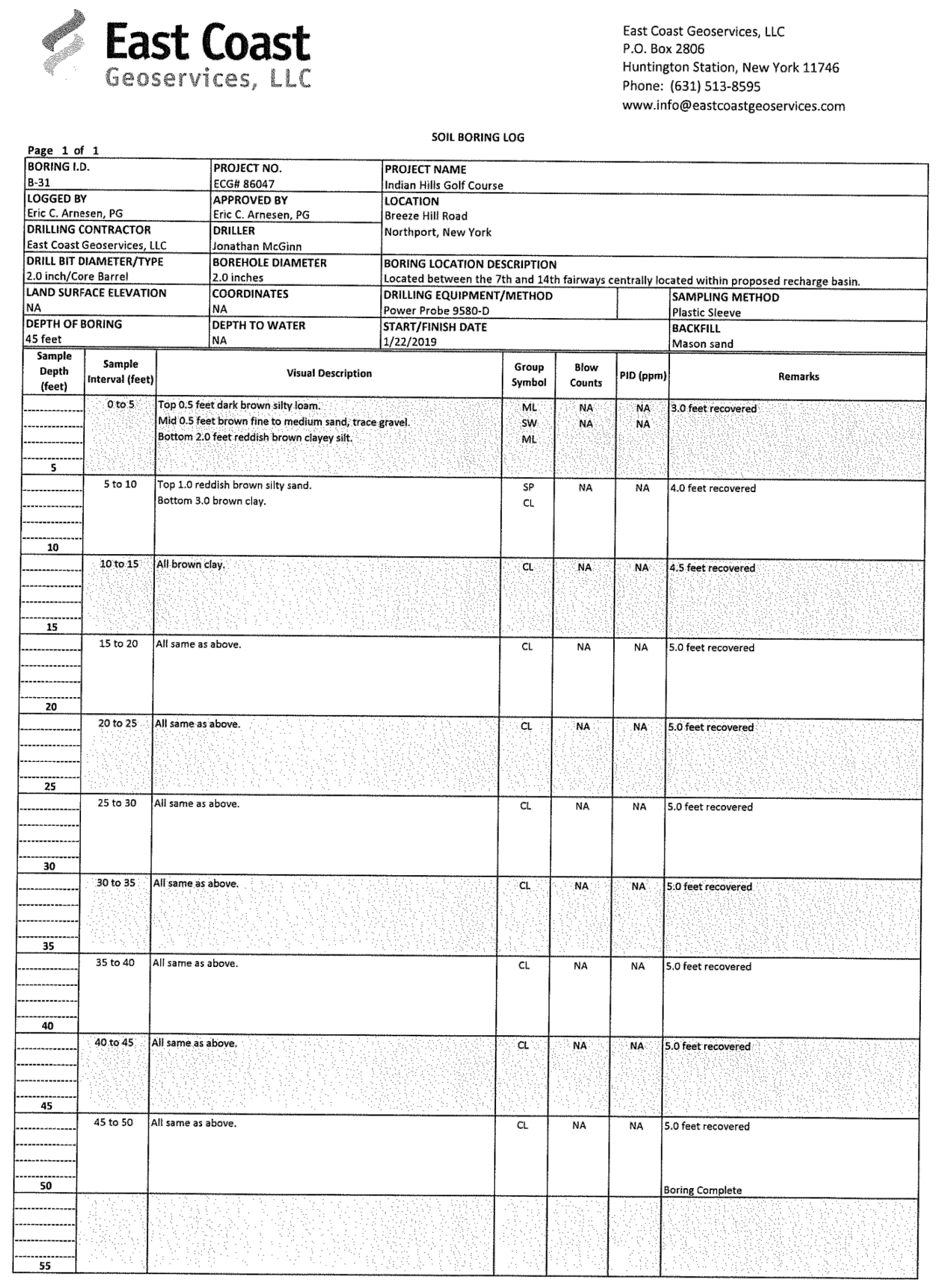

East Coast Geoservices, LLC
P.O. Box 2806
Huntington Station, New York 11746
Phone: (631) 513-8595
www.info@eastcoastgeoservices.com

SOIL BORING LOG

Page 1 of 1

BORING I.D. B-31	PROJECT NO. ECG# 86047	PROJECT NAME Indian Hills Golf Course	
LOGGED BY Eric C. Arnesen, PG	APPROVED BY Eric C. Arnesen, PG	LOCATION Breeze Hill Road Northport, New York	
DRILLING CONTRACTOR East Coast Geoservices, LLC	DRILLER Jonathan McGinn		
DRILL BIT DIAMETER/TYPE 2.0 inch/Core Barrel	BOREHOLE DIAMETER 2.0 inches	BORING LOCATION DESCRIPTION Located between the 7th and 14th fairways centrally located within proposed recharge basin.	
LAND SURFACE ELEVATION NA	COORDINATES NA	DRILLING EQUIPMENT/METHOD Power Probe 9580-D	SAMPLING METHOD Plastic Sleeve
DEPTH OF BORING 45 feet	DEPTH TO WATER NA	START/FINISH DATE 1/22/2019	BACKFILL Mason sand

Sample Depth (feet)	Sample Interval (feet)	Visual Description	Group Symbol	Blow Counts	PID (ppm)	Remarks
5	0 to 5	Top 0.5 feet dark brown silty loam. Mid 0.5 feet brown fine to medium sand, trace gravel. Bottom 2.0 feet reddish brown clayey silt.	ML SW ML	NA NA	NA NA	3.0 feet recovered
10	5 to 10	Top 1.0 reddish brown silty sand. Bottom 3.0 brown clay.	SP CL	NA	NA	4.0 feet recovered
15	10 to 15	All brown clay.	CL	NA	NA	4.5 feet recovered
20	15 to 20	All same as above.	CL	NA	NA	5.0 feet recovered
25	20 to 25	All same as above.	CL	NA	NA	5.0 feet recovered
30	25 to 30	All same as above.	CL	NA	NA	5.0 feet recovered
35	30 to 35	All same as above.	CL	NA	NA	5.0 feet recovered
40	35 to 40	All same as above.	CL	NA	NA	5.0 feet recovered
45	40 to 45	All same as above.	CL	NA	NA	5.0 feet recovered
50	45 to 50	All same as above.	CL	NA	NA	5.0 feet recovered Boring Complete
55						

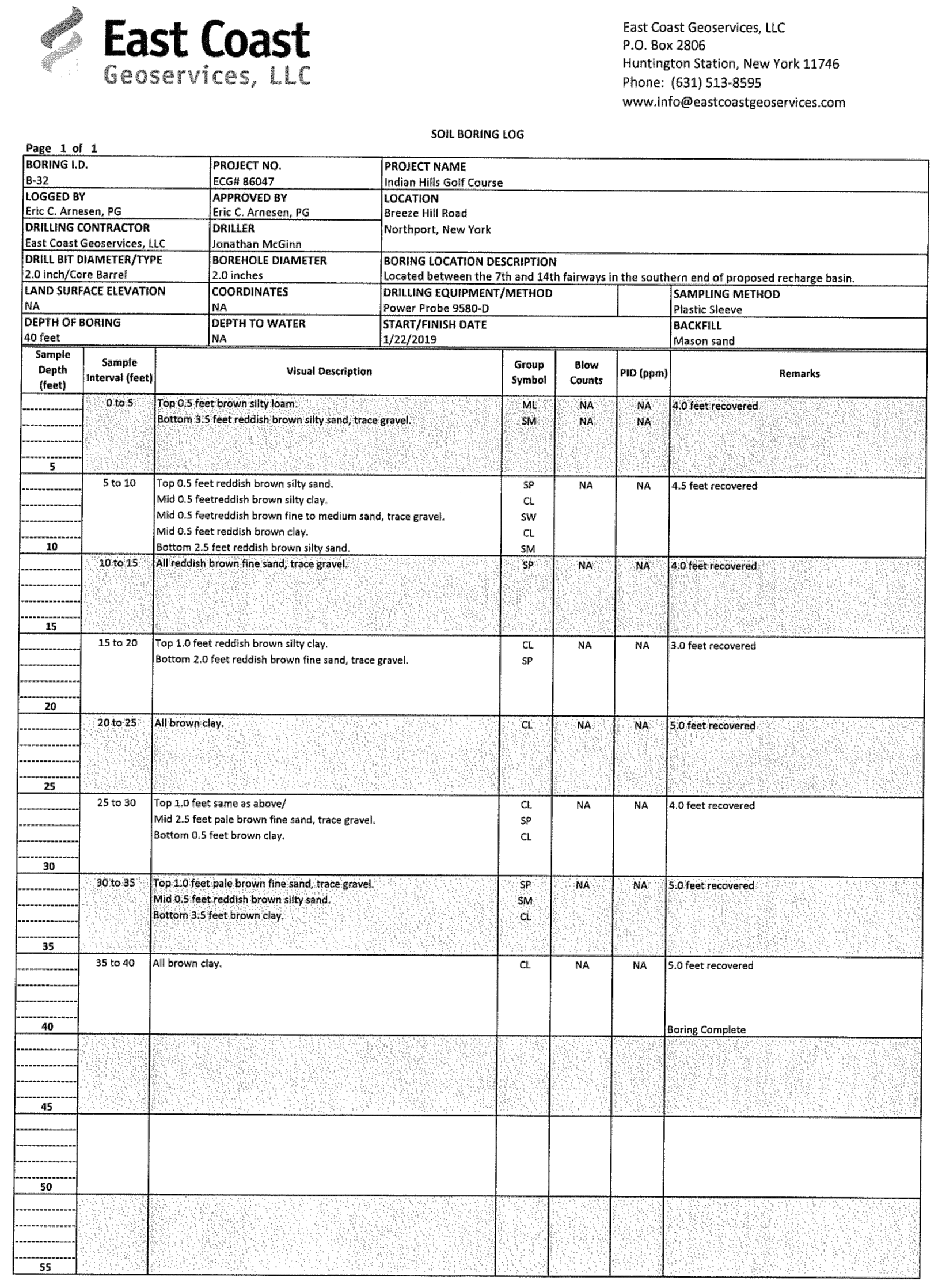

East Coast Geoservices, LLC
P.O. Box 2806
Huntington Station, New York 11746
Phone: (631) 513-8595
www.info@eastcoastgeoservices.com

SOIL BORING LOG

Page 1 of 1

BORING I.D. B-32	PROJECT NO. ECG# 86047	PROJECT NAME Indian Hills Golf Course	
LOGGED BY Eric C. Arnesen, PG	APPROVED BY Eric C. Arnesen, PG	LOCATION Breeze Hill Road Northport, New York	
DRILLING CONTRACTOR East Coast Geoservices, LLC	DRILLER Jonathan McGinn		
DRILL BIT DIAMETER/TYPE 2.0 inch/Core Barrel	BOREHOLE DIAMETER 2.0 inches	BORING LOCATION DESCRIPTION Located between the 7th and 14th fairways in the southern end of proposed recharge basin.	
LAND SURFACE ELEVATION NA	COORDINATES NA	DRILLING EQUIPMENT/METHOD Power Probe 9580-D	SAMPLING METHOD Plastic Sleeve
DEPTH OF BORING 40 feet	DEPTH TO WATER NA	START/FINISH DATE 1/22/2019	BACKFILL Mason sand

Sample Depth (feet)	Sample Interval (feet)	Visual Description	Group Symbol	Blow Counts	PID (ppm)	Remarks
5	0 to 5	Top 0.5 feet brown silty loam. Bottom 3.5 feet reddish brown silty sand, trace gravel.	ML SM	NA NA	NA NA	4.0 feet recovered
10	5 to 10	Top 0.5 feet reddish brown silty sand. Mid 0.5 feetreddish brown silty clay. Mid 0.5 feetreddish brown fine to medium sand, trace gravel. Mid 0.5 feet reddish brown clay. Bottom 2.5 feet reddish brown silty sand.	SP CL SW CL SM	NA	NA	4.5 feet recovered
15	10 to 15	All reddish brown fine sand, trace gravel.	SP	NA	NA	4.0 feet recovered
20	15 to 20	Top 1.0 feet reddish brown silty clay. Bottom 2.0 feet reddish brown fine sand, trace gravel.	CL SP	NA	NA	3.0 feet recovered
25	20 to 25	All brown clay.	CL	NA	NA	5.0 feet recovered
30	25 to 30	Top 1.0 feet same as above/ Mid 2.5 feet pale brown fine sand, trace gravel. Bottom 0.5 feet brown clay.	CL SP CL	NA	NA	4.0 feet recovered
35	30 to 35	Top 1.0 feet pale brown fine sand, trace gravel. Mid 0.5 feet reddish brown silty sand. Bottom 3.5 feet brown clay.	SP SM CL	NA	NA	5.0 feet recovered
40	35 to 40	All brown clay.	CL	NA	NA	5.0 feet recovered Boring Complete
45						
50						
55						

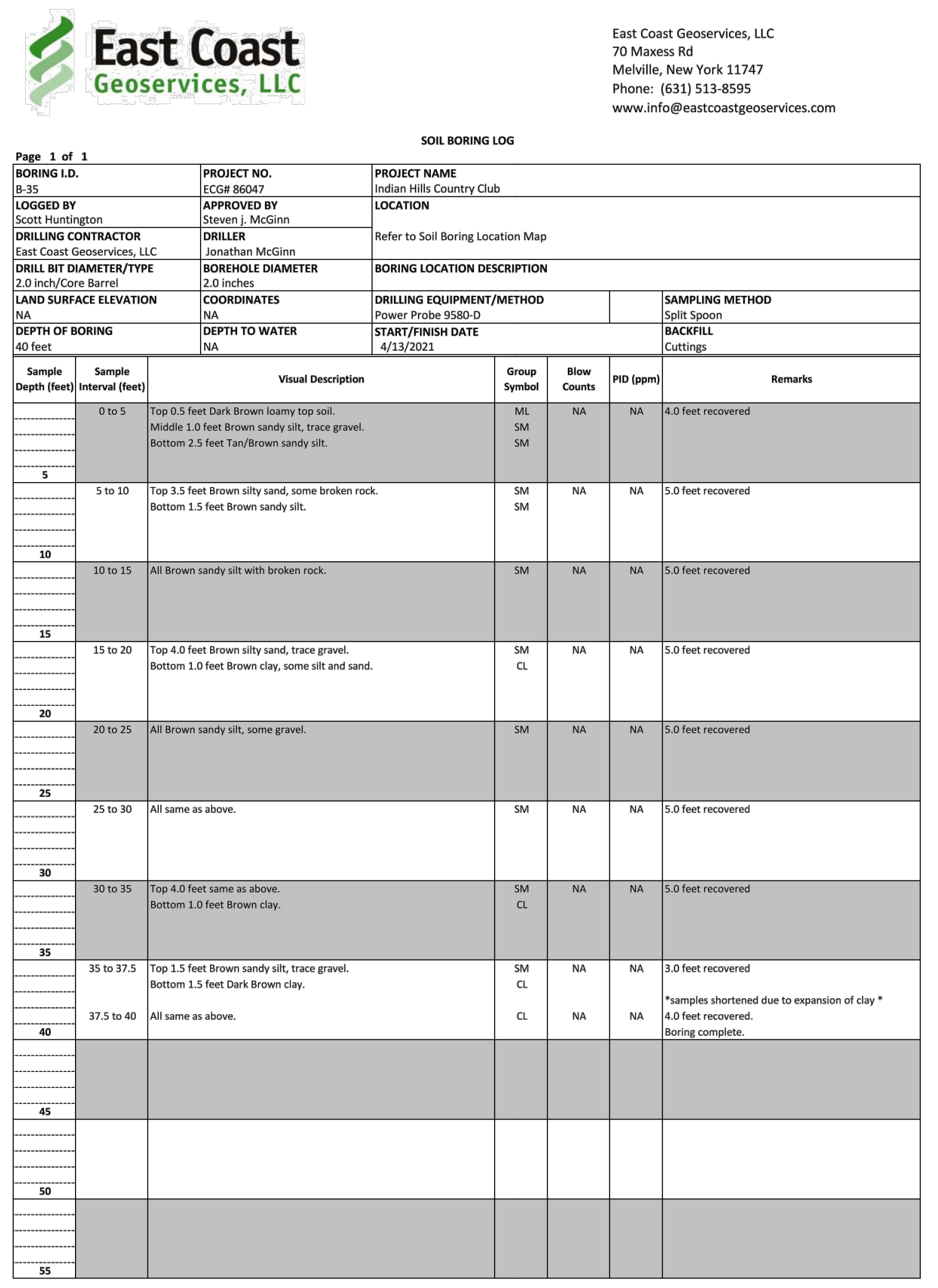

East Coast Geoservices, LLC
70 Maxess Rd
Melville, New York 11747
Phone: (631) 513-8595
www.info@eastcoastgeoservices.com

SOIL BORING LOG

Page 1 of 1

BORING I.D. B-35	PROJECT NO. ECG# 86047	PROJECT NAME Indian Hills Country Club	
LOGGED BY Scott Huntington	APPROVED BY Steven j. McGinn	LOCATION Refer to Soil Boring Location Map	
DRILLING CONTRACTOR East Coast Geoservices, LLC	DRILLER Jonathan McGinn		
DRILL BIT DIAMETER/TYPE 2.0 inch/Core Barrel	BOREHOLE DIAMETER 2.0 inches	BORING LOCATION DESCRIPTION	
LAND SURFACE ELEVATION NA	COORDINATES NA	DRILLING EQUIPMENT/METHOD Power Probe 9580-D	SAMPLING METHOD Split Spoon
DEPTH OF BORING 40 feet	DEPTH TO WATER NA	START/FINISH DATE 4/13/2021	BACKFILL Cuttings

Sample Depth (feet)	Sample Interval (feet)	Visual Description	Group Symbol	Blow Counts	PID (ppm)	Remarks
5	0 to 5	Top 0.5 feet Dark Brown loamy top soil. Middle 1.0 feet Brown sandy silt, trace gravel. Bottom 2.5 feet Tan/Brown sandy silt.	ML SM SM	NA	NA	4.0 feet recovered
10	5 to 10	Top 3.5 feet Brown silty sand, some broken rock. Bottom 1.5 feet Brown sandy silt.	SM SM	NA	NA	5.0 feet recovered
15	10 to 15	All Brown sandy silt with broken rock.	SM	NA	NA	5.0 feet recovered
20	15 to 20	Top 4.0 feet Brown silty sand, trace gravel. Bottom 1.0 feet Brown clay, some silt and sand.	SM CL	NA	NA	5.0 feet recovered
25	20 to 25	All Brown sandy silt, some gravel.	SM	NA	NA	5.0 feet recovered
30	25 to 30	All same as above.	SM	NA	NA	5.0 feet recovered
35	30 to 35	Top 4.0 feet same as above. Bottom 1.0 feet Brown clay.	SM CL	NA	NA	5.0 feet recovered
	35 to 37.5	Top 1.5 feet Brown sandy silt, trace gravel. Bottom 1.5 feet Dark Brown clay.	SM CL	NA	NA	3.0 feet recovered *samples shortened due to expansion of clay *
40	37.5 to 40	All same as above.	CL	NA	NA	4.0 feet recovered. Boring complete.
45						
50						
55						

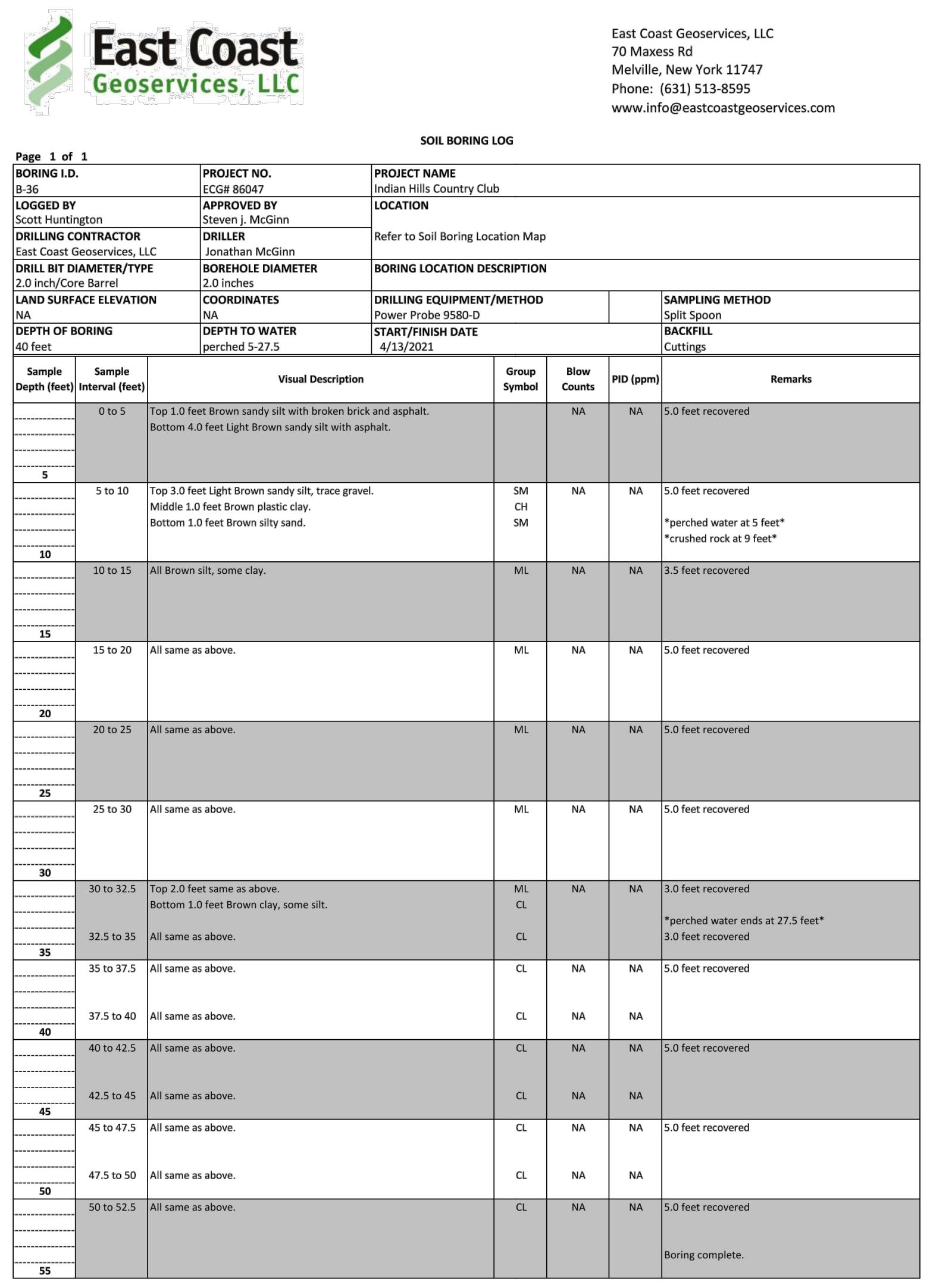

East Coast Geoservices, LLC
70 Maxess Rd
Melville, New York 11747
Phone: (631) 513-8595
www.info@eastcoastgeoservices.com

SOIL BORING LOG

Page 1 of 1

BORING I.D. B-36	PROJECT NO. ECG# 86047	PROJECT NAME Indian Hills Country Club	
LOGGED BY Scott Huntington	APPROVED BY Steven j. McGinn	LOCATION Refer to Soil Boring Location Map	
DRILLING CONTRACTOR East Coast Geoservices, LLC	DRILLER Jonathan McGinn		
DRILL BIT DIAMETER/TYPE 2.0 inch/Core Barrel	BOREHOLE DIAMETER 2.0 inches	BORING LOCATION DESCRIPTION	
LAND SURFACE ELEVATION NA	COORDINATES NA	DRILLING EQUIPMENT/METHOD Power Probe 9580-D	SAMPLING METHOD Split Spoon
DEPTH OF BORING 40 feet	DEPTH TO WATER perched 5-27.5	START/FINISH DATE 4/13/2021	BACKFILL Cuttings

Sample Depth (feet)	Sample Interval (feet)	Visual Description	Group Symbol	Blow Counts	PID (ppm)	Remarks
5	0 to 5	Top 1.0 feet Brown sandy silt with broken brick and asphalt. Bottom 4.0 feet Light Brown sandy silt with asphalt.		NA	NA	5.0 feet recovered
10	5 to 10	Top 3.0 feet Light Brown sandy silt, trace gravel. Middle 1.0 feet Brown plastic clay. Bottom 1.0 feet Brown silty sand.	SM CH SM	NA	NA	5.0 feet recovered *perched water at 5 feet* *crushed rock at 9 feet*
15	10 to 15	All Brown silt, some clay.	ML	NA	NA	3.5 feet recovered
20	15 to 20	All same as above.	ML	NA	NA	5.0 feet recovered
25	20 to 25	All same as above.	ML	NA	NA	5.0 feet recovered
30	25 to 30	All same as above.	ML	NA	NA	5.0 feet recovered
	30 to 32.5	Top 2.0 feet same as above. Bottom 1.0 feet Brown clay, some silt.	ML CL	NA	NA	3.0 feet recovered *perched water ends at 27.5 feet*
35	32.5 to 35	All same as above.	CL			3.0 feet recovered
	35 to 37.5	All same as above.	CL	NA	NA	5.0 feet recovered
40	37.5 to 40	All same as above.	CL	NA	NA	
	40 to 42.5	All same as above.	CL	NA	NA	5.0 feet recovered
45	42.5 to 45	All same as above.	CL	NA	NA	
	45 to 47.5	All same as above.	CL	NA	NA	5.0 feet recovered
50	47.5 to 50	All same as above.	CL	NA	NA	
55	50 to 52.5	All same as above.	CL	NA	NA	5.0 feet recovered Boring complete.

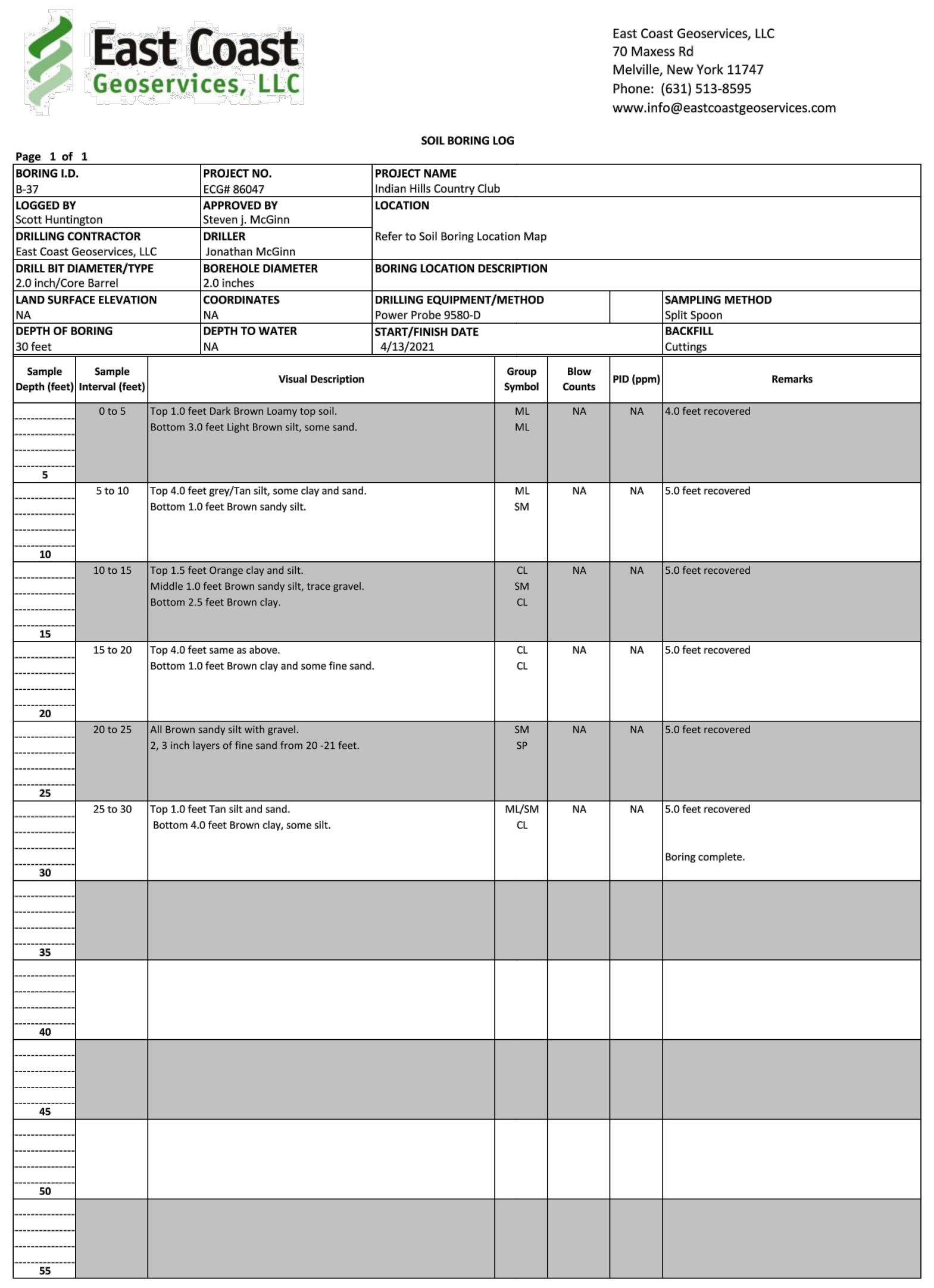

East Coast Geoservices, LLC
70 Maxess Rd
Melville, New York 11747
Phone: (631) 513-8595
www.info@eastcoastgeoservices.com

SOIL BORING LOG

Page 1 of 1

BORING I.D. B-37	PROJECT NO. ECG# 86047	PROJECT NAME Indian Hills Country Club	
LOGGED BY Scott Huntington	APPROVED BY Steven j. McGinn	LOCATION Refer to Soil Boring Location Map	
DRILLING CONTRACTOR East Coast Geoservices, LLC	DRILLER Jonathan McGinn		
DRILL BIT DIAMETER/TYPE 2.0 inch/Core Barrel	BOREHOLE DIAMETER 2.0 inches	BORING LOCATION DESCRIPTION	
LAND SURFACE ELEVATION NA	COORDINATES NA	DRILLING EQUIPMENT/METHOD Power Probe 9580-D	SAMPLING METHOD Split Spoon
DEPTH OF BORING 30 feet	DEPTH TO WATER NA	START/FINISH DATE 4/13/2021	BACKFILL Cuttings

Sample Depth (feet)	Sample Interval (feet)	Visual Description	Group Symbol	Blow Counts	PID (ppm)	Remarks
5	0 to 5	Top 1.0 feet Dark Brown Loamy top soil. Bottom 3.0 feet Light Brown silt, some sand.	ML ML	NA	NA	4.0 feet recovered
10	5 to 10	Top 4.0 feet grey/Tan silt, some clay and sand. Bottom 1.0 feet Brown sandy silt.	ML SM	NA	NA	5.0 feet recovered
15	10 to 15	Top 1.5 feet Orange clay and silt. Middle 1.0 feet Brown sandy silt, trace gravel. Bottom 2.5 feet Brown clay.	CL SM CL	NA	NA	5.0 feet recovered
20	15 to 20	Top 4.0 feet same as above. Bottom 1.0 feet Brown clay and some fine sand.	CL CL	NA	NA	5.0 feet recovered
25	20 to 25	All Brown sandy silt with gravel. 2, 3 inch layers of fine sand from 20 -21 feet.	SM SP	NA	NA	5.0 feet recovered
30	25 to 30	Top 1.0 feet Tan silt and sand. Bottom 4.0 feet Brown clay, some silt.	ML/SM CL	NA	NA	5.0 feet recovered Boring complete.
35						
40						
45						
50						
55						

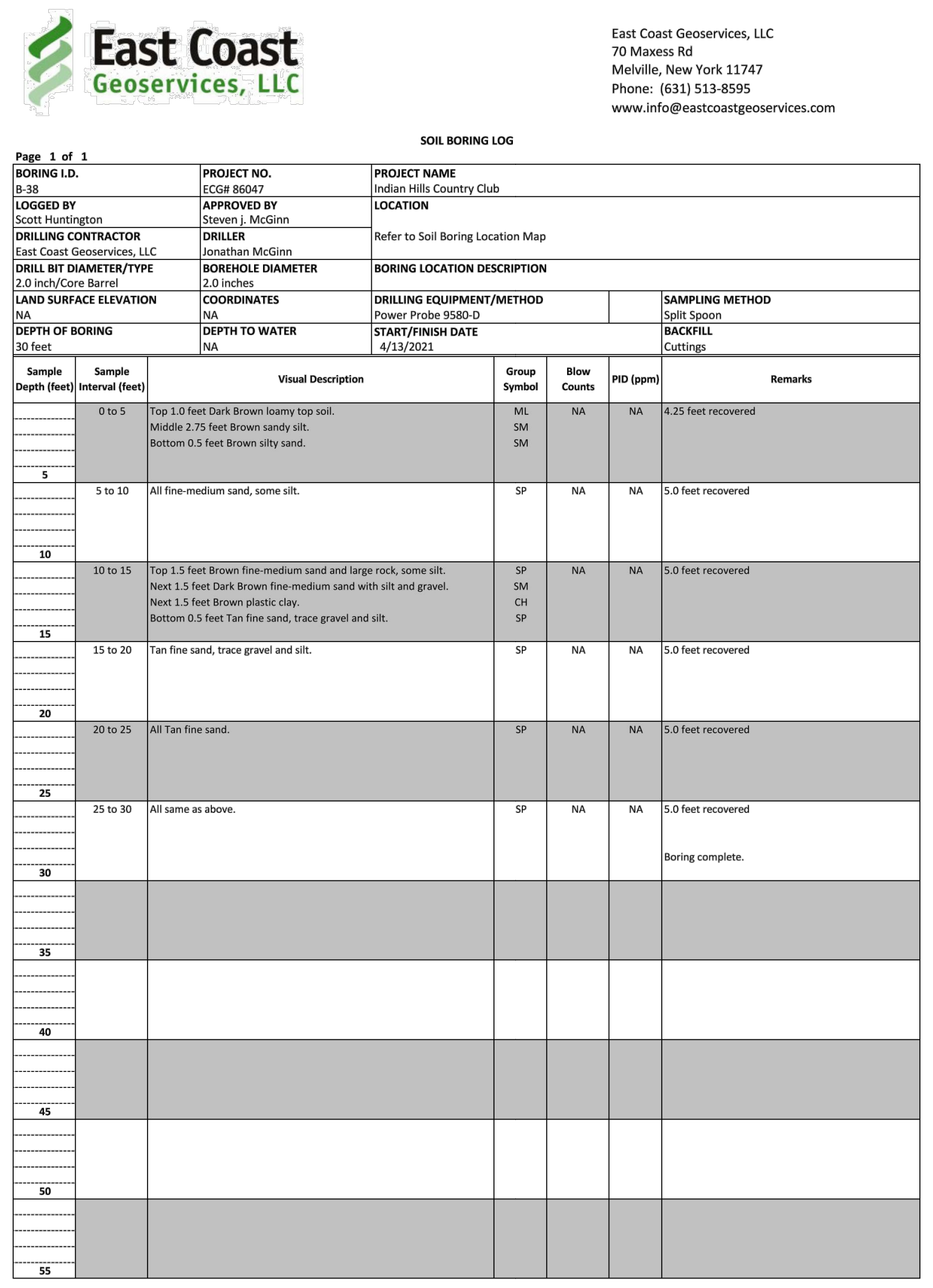

East Coast Geoservices, LLC
70 Maxess Rd
Melville, New York 11747
Phone: (631) 513-8595
www.info@eastcoastgeoservices.com

SOIL BORING LOG

Page 1 of 1

BORING I.D. B-38	PROJECT NO. ECG# 86047	PROJECT NAME Indian Hills Country Club	
LOGGED BY Scott Huntington	APPROVED BY Steven j. McGinn	LOCATION Refer to Soil Boring Location Map	
DRILLING CONTRACTOR East Coast Geoservices, LLC	DRILLER Jonathan McGinn		
DRILL BIT DIAMETER/TYPE 2.0 inch/Core Barrel	BOREHOLE DIAMETER 2.0 inches	BORING LOCATION DESCRIPTION	
LAND SURFACE ELEVATION NA	COORDINATES NA	DRILLING EQUIPMENT/METHOD Power Probe 9580-D	SAMPLING METHOD Split Spoon
DEPTH OF BORING 30 feet	DEPTH TO WATER NA	START/FINISH DATE 4/13/2021	BACKFILL Cuttings

Sample Depth (feet)	Sample Interval (feet)	Visual Description	Group Symbol	Blow Counts	PID (ppm)	Remarks
5	0 to 5	Top 1.0 feet Dark Brown loamy top soil. Middle 2.75 feet Brown sandy silt. Bottom 0.5 feet Brown silty sand.	ML SM SM	NA	NA	4.25 feet recovered
10	5 to 10	All fine-medium sand, some silt.	SP	NA	NA	5.0 feet recovered
15	10 to 15	Top 1.5 feet Brown fine-medium sand and large rock, some silt. Next 1.5 feet Dark Brown fine-medium sand with silt and gravel. Next 1.5 feet Brown plastic clay. Bottom 0.5 feet Tan fine sand, trace gravel and silt.	SP SM CH SP	NA	NA	5.0 feet recovered
20	15 to 20	Tan fine sand, trace gravel and silt.	SP	NA	NA	5.0 feet recovered
25	20 to 25	All Tan fine sand.	SP	NA	NA	5.0 feet recovered
30	25 to 30	All same as above.	SP	NA	NA	5.0 feet recovered Boring complete.
35						
40						
45						
50						
55						

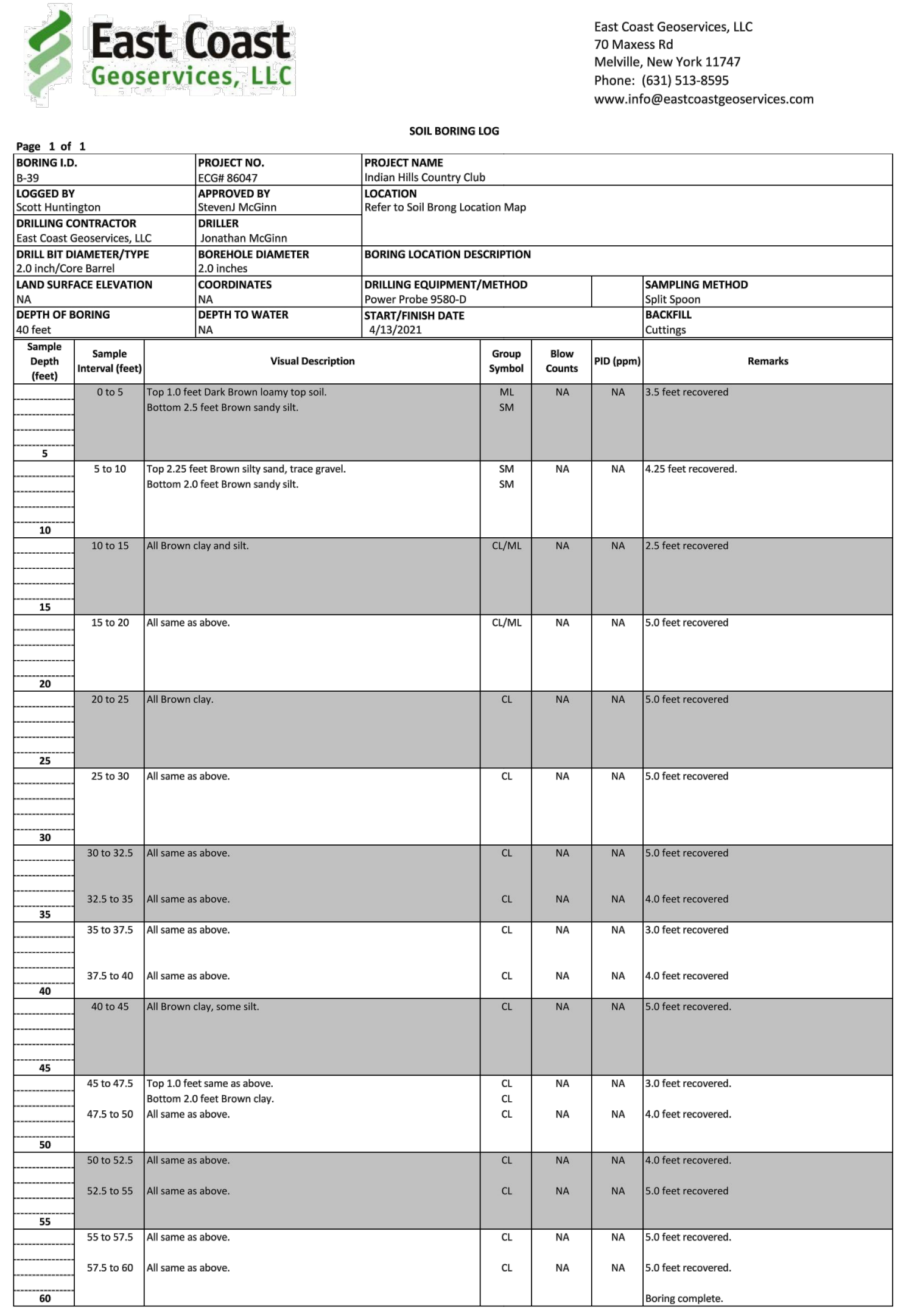

East Coast Geoservices, LLC
70 Maxess Rd
Melville, New York 11747
Phone: (631) 513-8595
www.info@eastcoastgeoservices.com

SOIL BORING LOG

Page 1 of 1

BORING I.D. B-39	PROJECT NO. ECG# 86047	PROJECT NAME Indian Hills Country Club	
LOGGED BY Scott Huntington	APPROVED BY StevenJ McGinn	LOCATION Refer to Soil Brong Location Map	
DRILLING CONTRACTOR East Coast Geoservices, LLC	DRILLER Jonathan McGinn		
DRILL BIT DIAMETER/TYPE 2.0 inch/Core Barrel	BOREHOLE DIAMETER 2.0 inches	BORING LOCATION DESCRIPTION	
LAND SURFACE ELEVATION NA	COORDINATES NA	DRILLING EQUIPMENT/METHOD Power Probe 9580-D	SAMPLING METHOD Split Spoon
DEPTH OF BORING 40 feet	DEPTH TO WATER NA	START/FINISH DATE 4/13/2021	BACKFILL Cuttings

Sample Depth (feet)	Sample Interval (feet)	Visual Description	Group Symbol	Blow Counts	PID (ppm)	Remarks
5	0 to 5	Top 1.0 feet Dark Brown loamy top soil. Bottom 2.5 feet Brown sandy silt.	ML SM	NA	NA	3.5 feet recovered
10	5 to 10	Top 2.25 feet Brown silty sand, trace gravel. Bottom 2.0 feet Brown sandy silt.	SM SM	NA	NA	4.25 feet recovered.
15	10 to 15	All Brown clay and silt.	CL/ML	NA	NA	2.5 feet recovered
20	15 to 20	All same as above.	CL/ML	NA	NA	5.0 feet recovered
25	20 to 25	All Brown clay.	CL	NA	NA	5.0 feet recovered
30	25 to 30	All same as above.	CL	NA	NA	5.0 feet recovered
	30 to 32.5	All same as above.	CL	NA	NA	5.0 feet recovered
35	32.5 to 35	All same as above.	CL	NA	NA	4.0 feet recovered
	35 to 37.5	All same as above.	CL	NA	NA	3.0 feet recovered
40	37.5 to 40	All same as above.	CL	NA	NA	4.0 feet recovered
45	40 to 45	All Brown clay, some silt.	CL	NA	NA	5.0 feet recovered.
	45 to 47.5	Top 1.0 feet same as above. Bottom 2.0 feet Brown clay.	CL CL	NA	NA	3.0 feet recovered.
50	47.5 to 50	All same as above.	CL	NA	NA	4.0 feet recovered.
	50 to 52.5	All same as above.	CL	NA	NA	4.0 feet recovered.
55	52.5 to 55	All same as above.	CL	NA	NA	5.0 feet recovered
	55 to 57.5	All same as above.	CL	NA	NA	5.0 feet recovered.
60	57.5 to 60	All same as above.	CL	NA	NA	5.0 feet recovered. Boring complete.

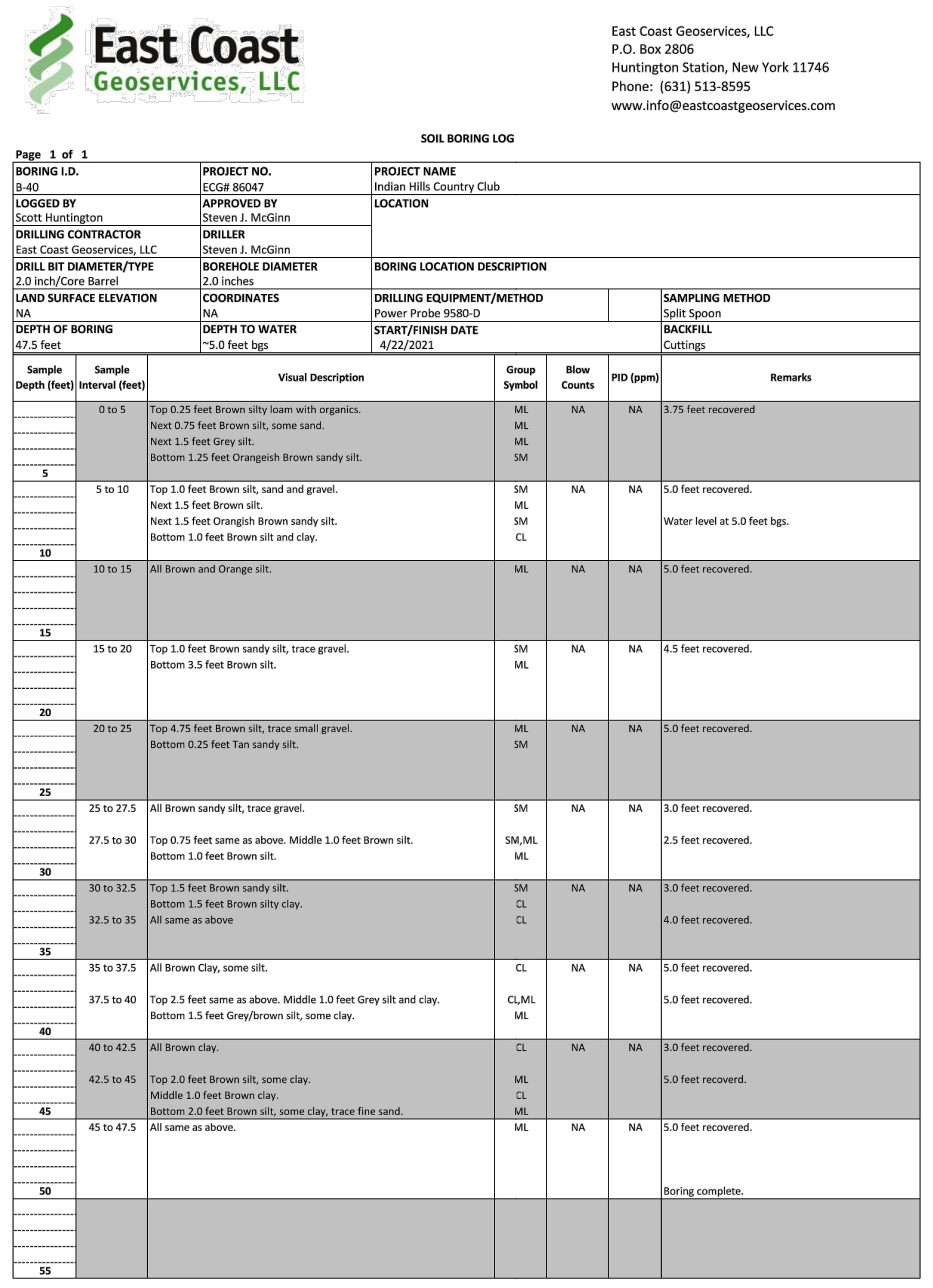

East Coast Geoservices, LLC
P.O. Box 2806
Huntington Station, New York 11746
Phone: (631) 513-8595
www.info@eastcoastgeoservices.com

SOIL BORING LOG

Page 1 of 1

BORING I.D. B-40	PROJECT NO. ECG# 86047	PROJECT NAME Indian Hills Country Club	
LOGGED BY Scott Huntington	APPROVED BY Steven J. McGinn	LOCATION	
DRILLING CONTRACTOR East Coast Geoservices, LLC	DRILLER Steven J. McGinn		
DRILL BIT DIAMETER/TYPE 2.0 inch/Core Barrel	BOREHOLE DIAMETER 2.0 inches	BORING LOCATION DESCRIPTION	
LAND SURFACE ELEVATION NA	COORDINATES NA	DRILLING EQUIPMENT/METHOD Power Probe 9580-D	SAMPLING METHOD Split Spoon
DEPTH OF BORING 47.5 feet	DEPTH TO WATER ~5.0 feet bgs	START/FINISH DATE 4/22/2021	BACKFILL Cuttings

Sample Depth (feet)	Sample Interval (feet)	Visual Description	Group Symbol	Blow Counts	PID (ppm)	Remarks
5	0 to 5	Top 0.25 feet Brown silty loam with organics. Next 0.75 feet Brown silt, some sand. Next 1.5 feet Grey silt. Bottom 1.25 feet Orangeish Brown sandy silt.	ML ML ML SM	NA	NA	3.75 feet recovered
10	5 to 10	Top 1.0 feet Brown silt, sand and gravel. Next 1.5 feet Brown silt. Next 1.5 feet Orangish Brown sandy silt. Bottom 1.0 feet Brown silt and clay.	SM ML SM CL	NA	NA	5.0 feet recovered. Water level at 5.0 feet bgs.
15	10 to 15	All Brown and Orange silt.	ML	NA	NA	5.0 feet recovered.
20	15 to 20	Top 1.0 feet Brown sandy silt, trace gravel. Bottom 3.5 feet Brown silt.	SM ML	NA	NA	4.5 feet recovered.
25	20 to 25	Top 4.75 feet Brown silt, trace small gravel. Bottom 0.25 feet Tan sandy silt.	ML SM	NA	NA	5.0 feet recovered.
	25 to 27.5	All Brown sandy silt, trace gravel.	SM	NA	NA	3.0 feet recovered.
30	27.5 to 30	Top 0.75 feet same as above. Middle 1.0 feet Brown silt. Bottom 1.0 feet Brown silt.	SM,ML ML			2.5 feet recovered.
	30 to 32.5	Top 1.5 feet Brown sandy silt. Bottom 1.5 feet Brown silty clay.	SM CL	NA	NA	3.0 feet recovered.
35	32.5 to 35	All same as above	CL			4.0 feet recovered.
	35 to 37.5	All Brown Clay, some silt.	CL	NA	NA	5.0 feet recovered.
40	37.5 to 40	Top 2.5 feet same as above. Middle 1.0 feet Grey silt and clay. Bottom 1.5 feet Grey/brown silt, some clay.	CL,ML ML			5.0 feet recovered.
	40 to 42.5	All Brown clay.	CL	NA	NA	3.0 feet recovered.
45	42.5 to 45	Top 2.0 feet Brown silt, some clay. Middle 1.0 feet Brown clay. Bottom 2.0 feet Brown silt, some clay, trace fine sand.	ML CL ML			5.0 feet recoverd.
50	45 to 47.5	All same as above.	ML	NA	NA	5.0 feet recovered. Boring complete.
55						

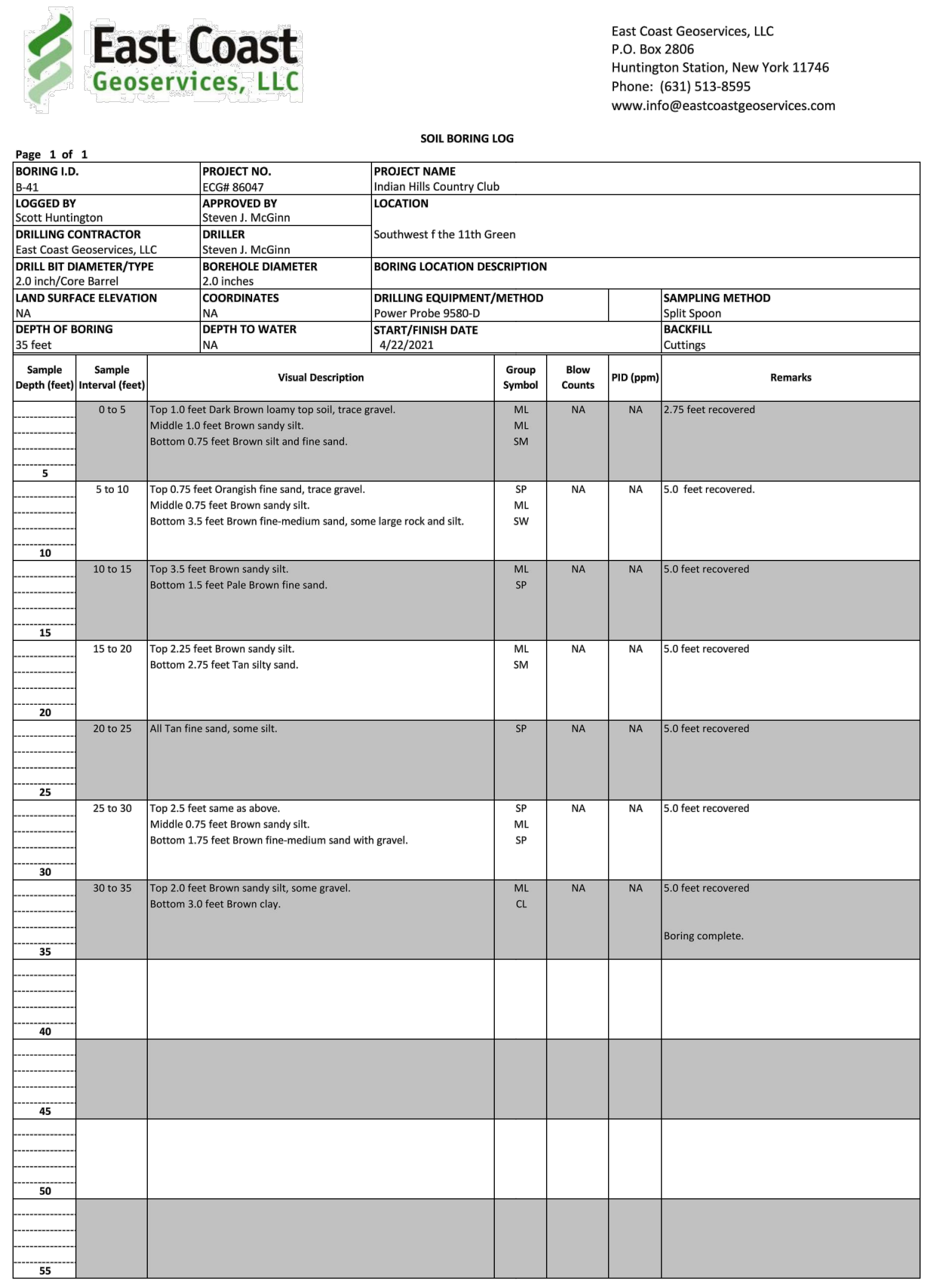

East Coast Geoservices, LLC
P.O. Box 2806
Huntington Station, New York 11746
Phone: (631) 513-8595
www.info@eastcoastgeoservices.com

SOIL BORING LOG

Page 1 of 1

BORING I.D. B-41	PROJECT NO. ECG# 86047	PROJECT NAME Indian Hills Country Club	
LOGGED BY Scott Huntington	APPROVED BY Steven J. McGinn	LOCATION Southwest f the 11th Green	
DRILLING CONTRACTOR East Coast Geoservices, LLC	DRILLER Steven J. McGinn		
DRILL BIT DIAMETER/TYPE 2.0 inch/Core Barrel	BOREHOLE DIAMETER 2.0 inches	BORING LOCATION DESCRIPTION	
LAND SURFACE ELEVATION NA	COORDINATES NA	DRILLING EQUIPMENT/METHOD Power Probe 9580-D	SAMPLING METHOD Split Spoon
DEPTH OF BORING 35 feet	DEPTH TO WATER NA	START/FINISH DATE 4/22/2021	BACKFILL Cuttings

Sample Depth (feet)	Sample Interval (feet)	Visual Description	Group Symbol	Blow Counts	PID (ppm)	Remarks
5	0 to 5	Top 1.0 feet Dark Brown loamy top soil, trace gravel. Middle 1.0 feet Brown sandy silt. Bottom 0.75 feet Brown silt and fine sand.	ML ML SM	NA	NA	2.75 feet recovered
10	5 to 10	Top 0.75 feet Orangish fine sand, trace gravel. Middle 0.75 feet Brown sandy silt. Bottom 3.5 feet Brown fine-medium sand, some large rock and silt.	SP ML SW	NA	NA	5.0 feet recovered.
15	10 to 15	Top 3.5 feet Brown sandy silt. Bottom 1.5 feet Pale Brown fine sand.	ML SP	NA	NA	5.0 feet recovered
20	15 to 20	Top 2.25 feet Brown sandy silt. Bottom 2.75 feet Tan silty sand.	ML SM	NA	NA	5.0 feet recovered
25	20 to 25	All Tan fine sand, some silt.	SP	NA	NA	5.0 feet recovered
30	25 to 30	Top 2.5 feet same as above. Middle 0.75 feet Brown sandy silt. Bottom 1.75 feet Brown fine-medium sand with gravel.	SP ML SP	NA	NA	5.0 feet recovered
35	30 to 35	Top 2.0 feet Brown sandy silt, some gravel. Bottom 3.0 feet Brown clay.	ML CL	NA	NA	5.0 feet recovered Boring complete.
40						
45						
50						
55						

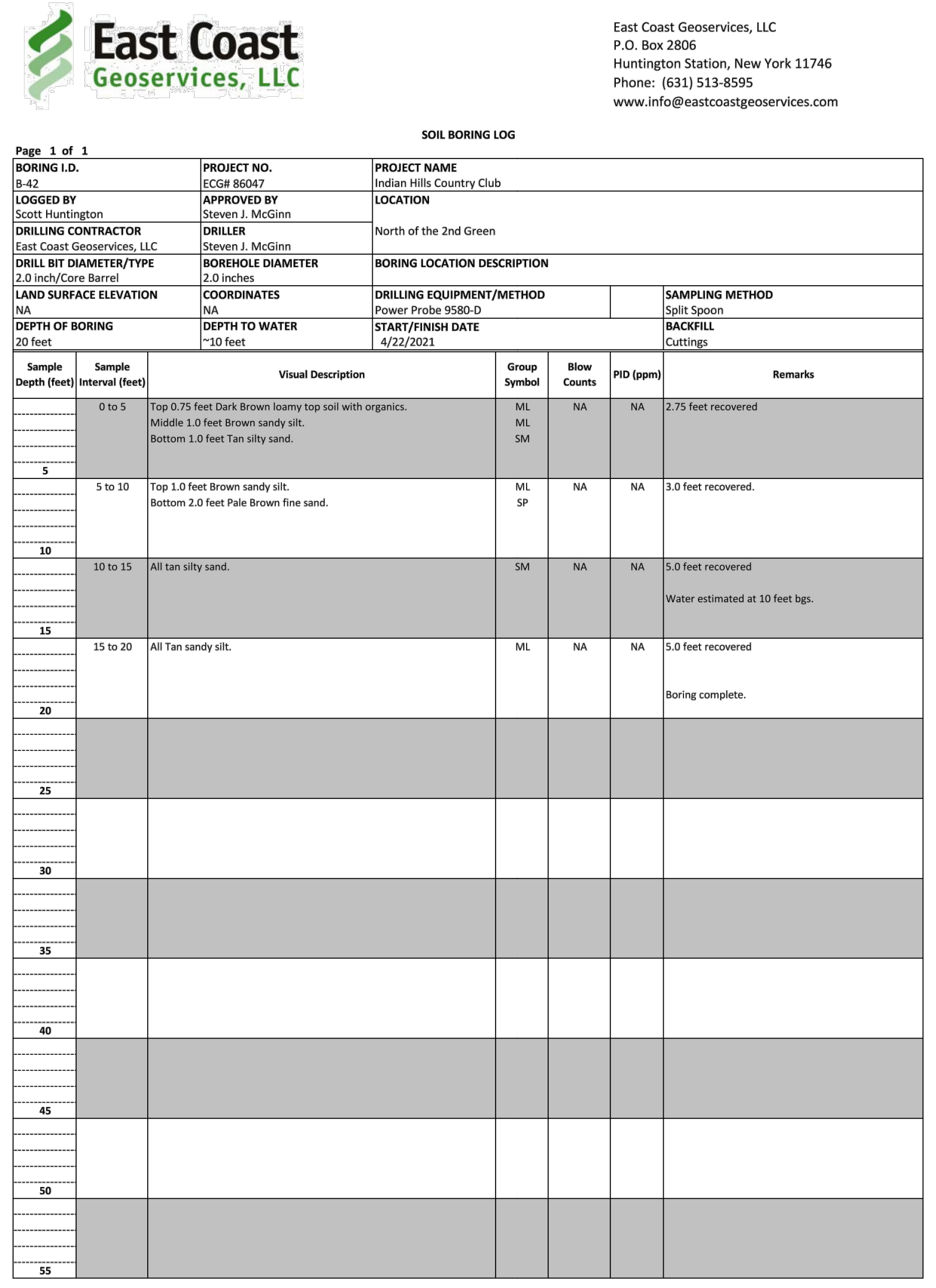

East Coast Geoservices, LLC
P.O. Box 2806
Huntington Station, New York 11746
Phone: (631) 513-8595
www.info@eastcoastgeoservices.com

SOIL BORING LOG

Page 1 of 1

BORING I.D. B-42	PROJECT NO. ECG# 86047	PROJECT NAME Indian Hills Country Club	
LOGGED BY Scott Huntington	APPROVED BY Steven J. McGinn	LOCATION North of the 2nd Green	
DRILLING CONTRACTOR East Coast Geoservices, LLC	DRILLER Steven J. McGinn		
DRILL BIT DIAMETER/TYPE 2.0 inch/Core Barrel	BOREHOLE DIAMETER 2.0 inches	BORING LOCATION DESCRIPTION	
LAND SURFACE ELEVATION NA	COORDINATES NA	DRILLING EQUIPMENT/METHOD Power Probe 9580-D	SAMPLING METHOD Split Spoon
DEPTH OF BORING 20 feet	DEPTH TO WATER ~10 feet	START/FINISH DATE 4/22/2021	BACKFILL Cuttings

Sample Depth (feet)	Sample Interval (feet)	Visual Description	Group Symbol	Blow Counts	PID (ppm)	Remarks
5	0 to 5	Top 0.75 feet Dark Brown loamy top soil with organics. Middle 1.0 feet Brown sandy silt. Bottom 1.0 feet Tan silty sand.	ML ML SM	NA	NA	2.75 feet recovered
10	5 to 10	Top 1.0 feet Brown sandy silt. Bottom 2.0 feet Pale Brown fine sand.	ML SP	NA	NA	3.0 feet recovered.
15	10 to 15	All tan silty sand.	SM	NA	NA	5.0 feet recovered Water estimated at 10 feet bgs.
20	15 to 20	All Tan sandy silt.	ML	NA	NA	5.0 feet recovered Boring complete.
25						
30						
35						
40						
45						
50						
55						

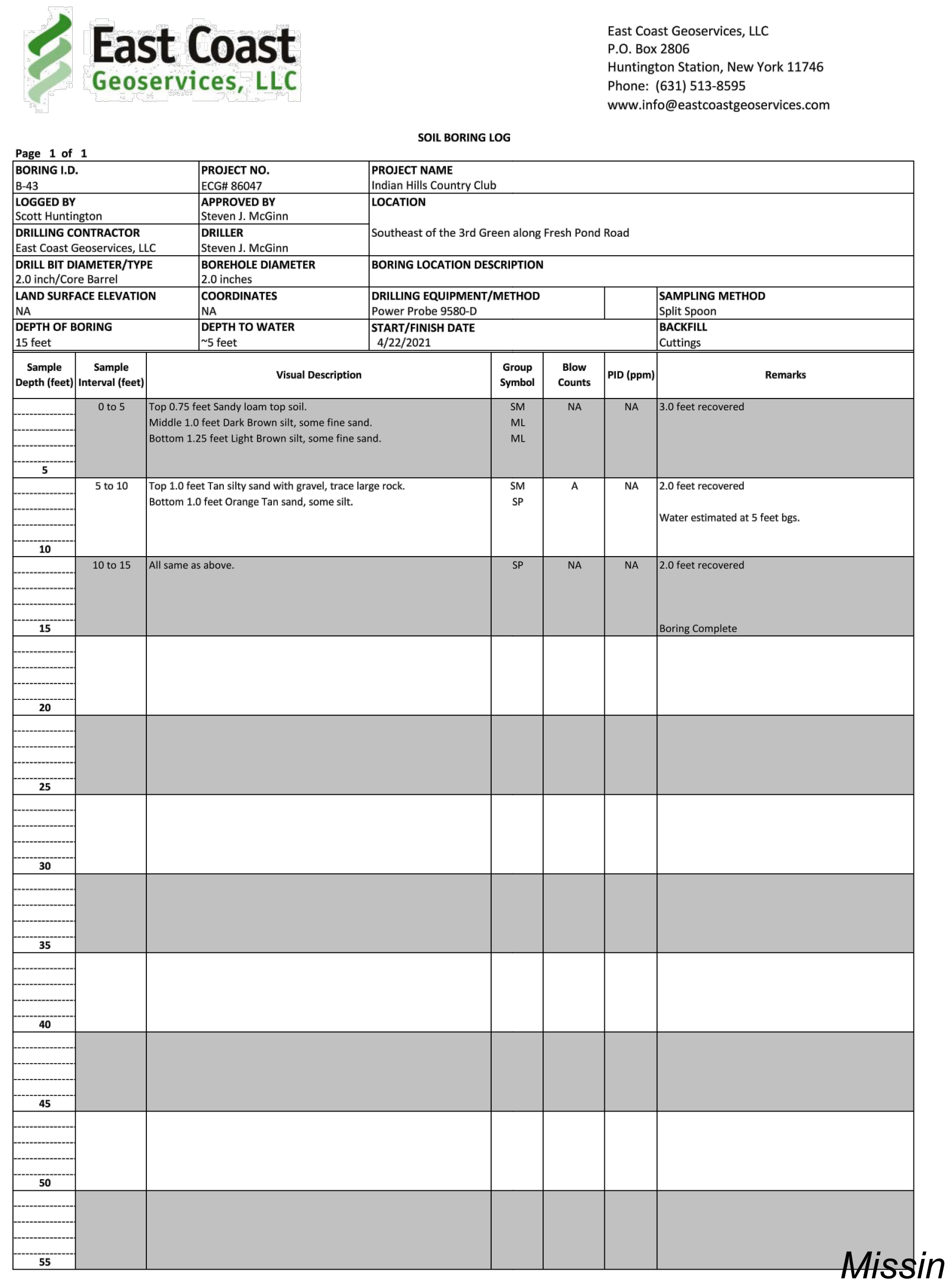

East Coast Geoservices, LLC
P.O. Box 2806
Huntington Station, New York 11746
Phone: (631) 513-8595
www.info@eastcoastgeoservices.com

SOIL BORING LOG

Page 1 of 1

BORING I.D. B-43	PROJECT NO. ECG# 86047	PROJECT NAME Indian Hills Country Club	
LOGGED BY Scott Huntington	APPROVED BY Steven J. McGinn	LOCATION Southeast of the 3rd Green along Fresh Pond Road	
DRILLING CONTRACTOR East Coast Geoservices, LLC	DRILLER Steven J. McGinn		
DRILL BIT DIAMETER/TYPE 2.0 inch/Core Barrel	BOREHOLE DIAMETER 2.0 inches	BORING LOCATION DESCRIPTION	
LAND SURFACE ELEVATION NA	COORDINATES NA	DRILLING EQUIPMENT/METHOD Power Probe 9580-D	SAMPLING METHOD Split Spoon
DEPTH OF BORING 15 feet	DEPTH TO WATER ~5 feet	START/FINISH DATE 4/22/2021	BACKFILL Cuttings

Sample Depth (feet)	Sample Interval (feet)	Visual Description	Group Symbol	Blow Counts	PID (ppm)	Remarks
5	0 to 5	Top 0.75 feet Sandy loam top soil. Middle 1.0 feet Dark Brown silt, some fine sand. Bottom 1.25 feet Light Brown silt, some fine sand.	SM ML ML	NA	NA	3.0 feet recovered
10	5 to 10	Top 1.0 feet Tan silty sand with gravel, trace large rock. Bottom 1.0 feet Orange Tan sand, some silt.	SM SP	A	NA	2.0 feet recovered Water estimated at 5 feet bgs.
15	10 to 15	All same as above.	SP	NA	NA	2.0 feet recovered Boring Complete
20						
25						
30						
35						
40						
45						
50						
55						

Missing or invalid reference
File: ..\Soil Boring Log 7-28-21.pdf
Sheet: 1

FOR TOWN USE

No.	REVISION	DATE

OWNER
I.H.C.C., INC. AND
ROBERG REVOCABLE TRUST
21 BREEZE HILL ROAD
NORTHPORT, NY, 11768
(631) 261 - 5700

APPLICANT:
THE PRESERVE AT INDIAN HILLS
1 RABRO DRIVE, SUITE 100
HAUPPAUGE, N.Y. 11788
(631) 351 - 4000

TEST BORING LOGS - 3
FOR
THE PRESERVE AT INDIAN HILLS
SITUATED AT
NORTHPORT
TOWN OF HUNTINGTON, SUFFOLK COUNTY, NEW YORK
S.C.T.M.: DISTRICT: 0400, SECT. 014, BLK. 04, LOTS 1 AND 2
DISTRICT 0400, SECT. 015, BLK. 01, LOTS 3.1, 3.2, 11, 12, 16, 19 AND P/O 22

THOMAS CHARLES DIXON

NELSON + POPE
engineers • architects • surveyors
70 Maxess Road, Melville, NY 11747 • 631.427.5665 • nelsonpope.com

DRAWN BY: GEO	CADD No.: 86047 CSP TB_LOGS 2021.DWG	SCALE:	DRAWING NO.: TB - 105	
CHECKED BY: JM	FILE NO.: 400-014	NONE		
DATE: OCTOBER, 2021	PROJECT NO.: 86047		SHEET NO.: 44 OF 44	

G:\projects\86047\FINALS\CONDOMINIUM\86047 CSP TB_LOGS 2021.dwg, 44 OF 44 TEST BORING LOGS - 3, 10/11/2021 3:07:09 PM